Log 2697

National Transportation Safety Board

Washington, D.C. 20594

Safety Recommendation

Date: December 3, 1998

In reply refer to: A-98-125 and -126

Honorable Jane F. Garvey
Administrator
Federal Aviation Administration
Washington, D.C. 20591

On December 6, 1995, Pakistan International Airlines (PIA) flight 722, a Boeing 747-240 "Combi" airplane,[1] experienced an uncontained failure[2] in the low pressure turbine (LPT) area of the No. 2 engine, a General Electric Aircraft Engines (GE) CF6-50E2, shortly after takeoff from John F. Kennedy International Airport (JFK), New York.[3] The flightcrew reported that as the airplane was climbing through 1,000 feet, they heard a loud thud and grinding noise and that the airplane then yawed to the left. The flight engineer reported that immediately after he heard the thud, he noted that the No. 2 engine oil pressure and oil quantity gauges were both indicating zero. The flightcrew continued the climb and later shut down the No. 2 engine. The airplane returned to JFK and landed without further incident. None of the 240 passengers and 15 crewmembers on board were injured. The airplane was operating on an instrument flight rules (IFR) flight plan under the provisions of Title 14 Code of Federal Regulations (CFR) Part 129 as a regularly scheduled international passenger and cargo flight from JFK to Charles de Gaulle Airport, Paris, France.

The examination of the No. 2 engine revealed that most of the LPT module was missing (see figure 1). The airplane had punctures to its left wing leading edge slats and to a landing gear door. In addition, the No. 1 engine had hard body impact damage[4] to 18 of the 38 fan blades, and the fan cowl had impact damage from the debris ejected from the No. 2 engine.

[1] A Boeing 747 Combi airplane is configured such that it can carry both passengers and cargo on the main deck.
[2] An uncontained engine failure occurs when an internal part of the engine fails and is ejected, or results in other parts being ejected, through the cowling.
[3] For more detailed information, see Brief of Incident NYC96IA036 (enclosed).
[4] Hard body impact damage is characterized by a serrated appearance and deep cuts to the airfoil's leading and trailing edges. Hard body impact damage can result from impact with metal parts, concrete, asphalt, and rocks.

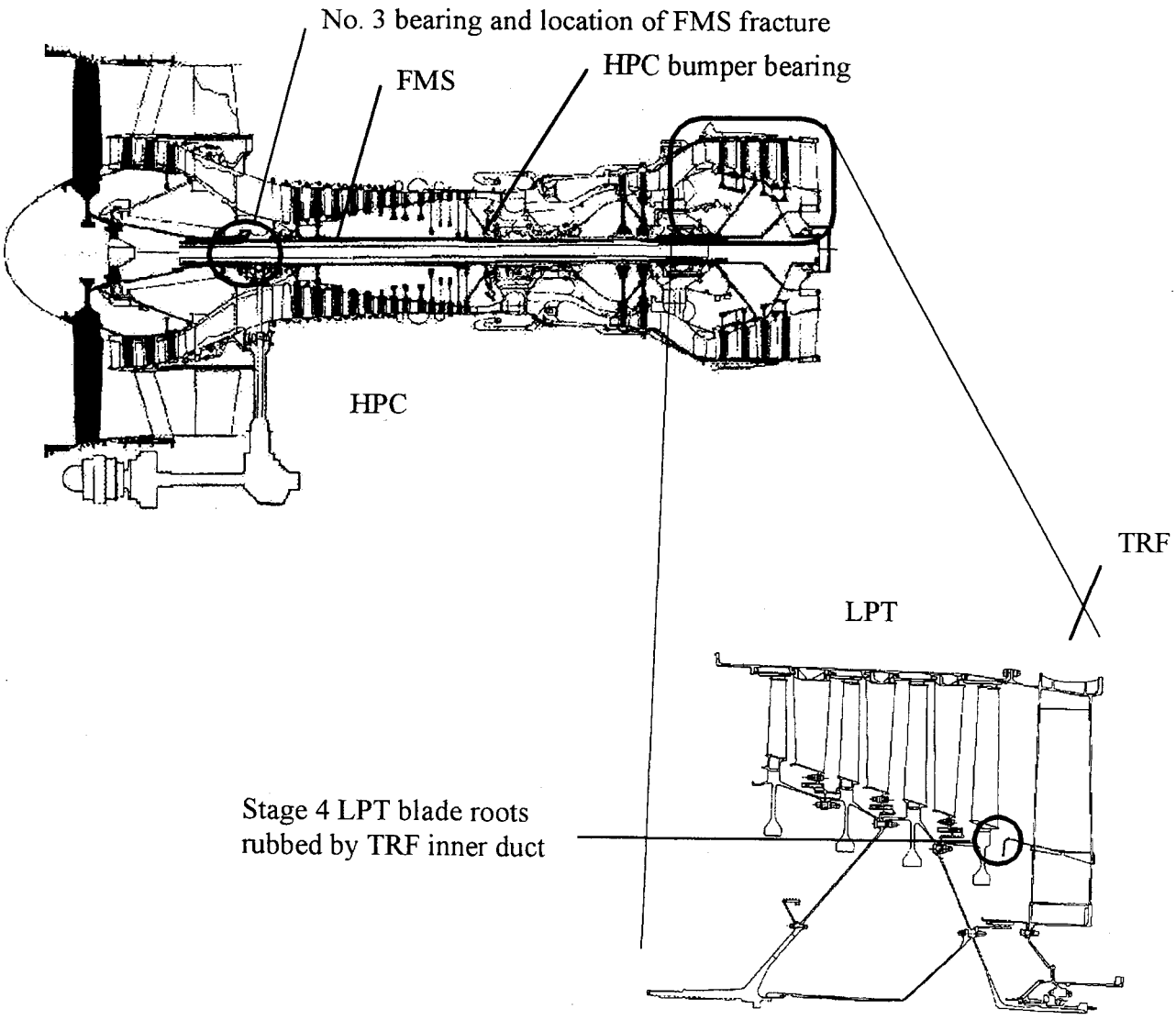

Figure 1. Cross section of CF6-50 engine and expanded view of LPT module

Disassembly of the engine, serial number (SN) 455-954, at GE's Engine Maintenance Center, Ontario, California, under the direction of the National Transportation Safety Board, revealed that the fan midshaft (FMS) was fractured circumferentially, just aft of the No. 3 (roller) bearing. Although the No. 3 bearing was damaged, the damage was typical of secondary damage that would have occurred late in the engine failure sequence.

Examination of the fractured FMS by the Safety Board's and GE's materials laboratories revealed a fatigue fracture with multiple origins on the outer diameter (OD) of the shaft that propagated inward. The examinations also revealed a color variation across the fracture surface and a reduction of the material hardness at the fracture in comparison to the other areas of the FMS and the engineering drawing specification, indicating that the part had been previously

overheated. In addition, SerMetel paint[5] was found on the surface of the fatigue fracture, suggesting that the crack existed but was not detected when the shaft had been painted following a previous repair.

The maintenance records for the fractured FMS, part number 9032M21P18, SN MPOE3573, show that it had been installed in another PIA CF6-50 engine, SN 455-927, which was brought into PIA's engine shop on September 26, 1986, because of a No. 3 bearing failure. The records show that the FMS was overhauled, magnetic particle inspected (MPI),[6] hardness checked in Area B,[7] dimensionally inspected, and painted. At the time of the No. 3 bearing failure in PIA engine SN 455-927, the FMS had 4,594 cycles since new (CSN). The fracture occurred 9,235 cycles later at 13,829 CSN. The records also show that PIA overhauled, conducted an MPI, and painted the FMS on August 12, 1991, at 9,764 CSN, 4,065 cycles before the fracture; and on December 14, 1993, at 12,292 CSN, 1,537 cycles before the fracture. There was no record that the FMS had been inspected by etching the surface,[8] as required by the CF6-50 Shop Manual[9] if the shaft had been rubbed.[10]

The Safety Board is concerned about the potential for other FMS fractures from rubs sufficient to overheat the material and reduce its tensile and fatigue properties but not sufficient to cause damage warranting an inspection of the shafts. However, the Safety Board notes that as a result of the PIA investigation, GE issued Alert Service Bulletin CF6-50 72-A1120 on April 4, 1997, which identifies other CF6-50 FMSs that had been rubbed and provides a one-time eddy current inspection procedure to identify and remove from service any FMSs that were overheated.

The disassembly of the PIA engine showed that the center section of the FMS had become wedged into the high pressure compressor (HPC) bumper bearings. The design of the CF6-50 engine's FMS is such that the OD of the forward half of the shaft is greater than the inner diameter of the bumper bearing on the inside of the HPC rear hub. On the PIA engine, when the FMS fractured at its forward end, the rear section moved aft, and the larger diameter section of the shaft became wedged into the bumper bearing, limiting the rearward movement of the LPT

---

[5] SerMetel paint is an aluminum-based corrosion preventative coating.

[6] MPI is a nondestructive method of detecting cracks and other defects in ferromagnetic materials such as iron or steel. The inspection consists of magnetizing the part with high-amperage, direct current electricity, thus creating magnetic lines of flux, then applying or immersing the part in a liquid containing ferromagnetic particles in suspension. The ferromagnetic particles align themselves with the magnetic lines of flux on the surface of the part forming a pattern. If a discontinuity is present in the material on or near the surface, opposing magnetic poles form on either side of the discontinuity and the pattern is disrupted, forming an "indication." The indications assume the approximate size and shape of the surface projection of the discontinuity; however, indications are more visible when the defects are approximately perpendicular to the magnetic lines of flux.

[7] Area B is on the forward section of the FMS, away from the area of the fracture.

[8] Etching the surface is a nondestructive test procedure that will show if the base metal has been locally overheated because of a rub.

[9] GE CF6-50 Task Numbered Shop Manual, Inspection, Subtask 72-24-01-220-053.

[10] The No. 3 bearing supports and aligns the forward end of the FMS. When the bearing fails, the FMS shifts slightly, allowing contact with the HPC disk bore causing rubbing and frictional overheating. In the PIA event, the rub on the FMS would have been evident when it was repaired in 1986 after the No. 3 bearing failure. Since the FMS was painted in 1986, after the No. 3 bearing failure, the rub damage would not have been evident during subsequent inspections.

rotor. With the FMS wedged into the bumper bearing, the LPT rotor was then driven by the high pressure rotor, which has a rotational speed more than twice the rpm limit of the low pressure rotor. Additionally, two stage 4 LPT blade roots recovered from the core cowl had circumferential grooves on their rear faces. The grooves corresponded to the forward edge of the turbine rear frame (TRF) inner duct, indicating that additional structure had limited the rearward movement of the LPT rotor and meshing[11] action, thus permitting the rotor to overspeed. Several stage 1 LPT blades recovered from the wing slat area were rubbed on the rear faces of their roots and had the rear portions of the blade root serrations sheared consistent with the radial outward movement of the blades, suggesting that those blades were pushed out of the disk from the rear and separated under high-centrifugal loads.

On February 22, 1996, a Continental Airlines McDonnell Douglas DC-10 airplane sustained uncontained LPT damage to the No. 3 engine, a CF6-50C2, because of an FMS fracture during the takeoff roll at Houston, Texas. The flightcrew reported that when they heard the engine surge,[12] they immediately retarded the power levers to idle and rejected the takeoff. The engine's core cowl was penetrated by turbine blade fragments, but no damage to any other part of the airplane occurred. The examination of the Continental Airlines engine showed that the FMS had fractured near the forward end after being rubbed by the HPC air duct, which had fractured circumferentially along the seam of a previous weld repair because of porosity in the weld. The examination also revealed that the FMS had become wedged into the HPC bumper bearing, and the stage 4 LPT blades were rubbed on their rear faces, much like on the PIA engine.

GE reported that a dimensional inspection of the LPT disks showed that the disks had "grown," indicating that the LPT rotor had accelerated to 140 percent rpm.[13] The Safety Board is concerned about the LPT rotor overspeeds and uncontained LPT damage that occur even when the flightcrew promptly retards the engine power, as was done by the Continental Airlines flightcrew. The Safety Board is further concerned about the extent of resultant damage when an FMS fracture occurs and the flightcrew cannot immediately reduce power on the affected engine, such as on the PIA flight. The rubs on the rear faces of the stage 4 LPT blade roots and the wedging of the FMS into the HPC bumper bearing, which were noted on the PIA and Continental Airlines engines, indicate that the meshing action of the CF6-50 engine's LPT rotor is being impeded. The turbine disk growth that was noted on the Continental Airlines engine shows that the limited meshing action allowed the overspeed of the LPT. Therefore, the Safety Board believes that the Federal Aviation Administration (FAA) should require GE to modify the CF6-50 engine to eliminate the impediments to the aft translation of the LPT rotor that limits the amount of meshing that occurs in the event of an FMS fracture.

---

[11] Meshing is the desired clashing of the turbine blades and vanes following a turbine rotor shaft fracture that is intended to decelerate the rotor and to break the blades into small particles, thus reducing the likelihood of blades penetrating an engine casing.

[12] A surge is a disruption of the airflow through the compressors resulting in a stagnation or reversal of the airflow and is typified by loud reports or bangs and flames from the inlet and tailpipe.

[13] When a disk exceeds its rotational speed limit, the extreme centrifugal loads cause plastic deformation of the part so that the diametrical dimensions of the disk are greater following the overspeed event.

Because of other incidents, the Safety Board is also concerned about the LPT containment capability of GE's CF6-80 series engines. On January 24, 1996, American Airlines flight 1745, an Airbus Industrie A300-600 airplane, experienced an uncontained LPT failure in the No. 1 engine, a GE CF6-80C2A5, just after takeoff from Philadelphia, Pennsylvania. It was operating on an IFR flight plan under the provisions of 14 CFR Part 121 as a regularly scheduled passenger flight from Philadelphia to San Juan, Puerto Rico. The flightcrew reported that as the airplane was climbing through 1,000 feet, they heard a "soft thunk" and the No. 1 engine spooled down to idle. The airplane returned and landed at Philadelphia without further incident, and none of the passengers and crewmembers were injured. The flightcrew reported that the No. 1 engine ran at idle power until the crew shut it down after the airplane had landed.

Examination of the No. 1 engine revealed that the core cowl had a 15-inch long (circumferential) by 6-inch wide (axial) hole in the plane of the stage 4 LPT rotor. There were numerous dents and impact marks on the underside of the left wing's inboard aileron and the outboard side of the inboard flap track fairing, both of which are directly aft of the No. 1 engine's exhaust.[14]

The engine was disassembled and examined under the direction of the Safety Board at Motoren-und Turbinen-Union (MTU), Hannover, Germany.[15] The disassembly revealed that the tip of one interturbine temperature ($T_{4.9}$)[16] probe had broken off and impacted one stage 1 LPT blade, causing a fatigue fracture of the airfoil near the blade tip shroud (see figure 2). All of the stage 2, 3, 4, and 5 LPT blades were found in their respective disks; however, all were fractured transversely across the airfoils at various lengths above the blade root platforms. The disassembly also revealed that the LPT case had a 17-inch by 2-inch wide hole in the stage 4 LPT plane of rotation. The damage to the LPT rotor was progressively worse along the gaspath, suggesting that the stage 1 LPT blade tip separated first, that all of the blades in the following stages were then fractured, and that the mass of material became larger as it progressed through the rotor, subsequently resulting in a case rupture in the stage 4 area.

[14] There was no indication that any of the material that exited through the core cowl struck the wing or fuselage.

[15] American Airlines had the maintenance and repair of its GE CF6-80C2 engines contracted out to MTU at that time.

[16] Gas turbine engine convention is to number the aerodynamic engine stations with station 1 being at the engine inlet and to use progressively higher numbers along the gas path to the exhaust nozzle. Generally, the number is accompanied by a prefix P (pressure) or T (temperature). In the CF6-80 series engine, station 4.9 would indicate that the probe was located between the high and low pressure turbine rotors.

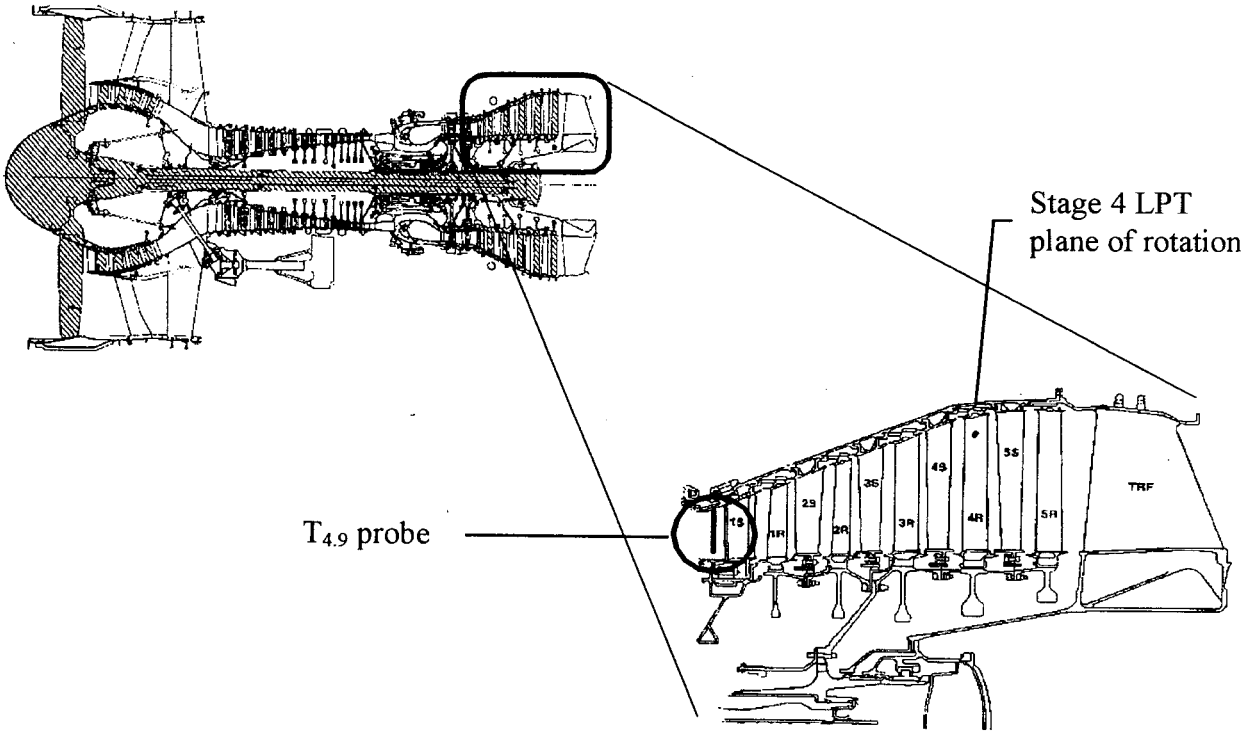

Figure 2. Cross section of CF6-80C2 engine and expanded view of LPT module

The Safety Board is aware of a similar event that occurred on September 5, 1997, when a Federal Express (FedEx) McDonnell Douglas MD-11 airplane, equipped with GE CF6-80C2 engines, had an uncontained LPT failure in the plane of the stage 4 LPT rotor. The disassembly of the FedEx engine showed that a stage 1 LPT airseal segment had broken loose from the LPT case and passed through the gaspath causing the breakage of the downstream turbine blades. As in the American Airlines LPT, the damage in the FedEx LPT rotor was more extensive downstream along the gaspath. The evidence shows that both the American Airlines and FedEx LPT cases withstood the initial containment challenge of the separation of an LPT blade; however, neither case could withstand the loads imparted by the resultant mass of broken LPT airfoils. This suggests that the design containment capability of the LPT case is inadequate.

To gain a clearer understanding of the number and frequency of uncontained LPT failures in CF6 engines, the Safety Board requested, and GE provided, a list of all such failures that have occurred in the CF6-50 and -80 series commercial engine fleet. The GE data show that the CF6-50 engine had experienced 25 uncontained LPT failures as of 1997, including the PIA and Continental Airlines FMS fracture events, and that the CF6-80C2 engine had experienced 6 uncontained LPT failures as of 1997, including the American Airlines and FedEx events. GE attributed these uncontained LPT failures to LPT blade fractures, FMS fractures, and other causes.

Turbine engine rotor cases are required to ensure containment of fractured blades by 14 CFR 33.19, which states in part that "the design of the compressor and turbine rotor cases must provide for the containment of damage from rotor blade failure." The requirements for

turbine containment are further addressed in 14 CFR 33.75, which notes in part that "any probable single or multiple failure...will not cause an engine to...burst (release hazardous fragments through the engine case)." Because the uncontained LPT failures in the CF6-50 and -80C2 engines were attributed to a number of different causes, the LPT containment capability of these engines must be improved to comply with 14 CFR 33.19 and 33.75.

The Safety Board notes that as a result of uncontained LPT failures that were initiated by blade or shaft fractures in the Pratt & Whitney (P&W) JT8D-1 through -17AR and JT9D engines, the FAA required modification of those engines to improve the LPT containment through Airworthiness Directives 97-19-14 and 96-25-10, respectively.[17] The same standard should apply to GE CF6 engines. Therefore, the Safety Board believes that the FAA should require GE to improve the ability of the CF6-50 and the CF6-80 series engines to prevent fractured LPT blades from being liberated through the engine cowling.

Therefore, the National Transportation Safety Board recommends that the Federal Aviation Administration:

> Require General Electric Aircraft Engines to modify the CF6-50 engine to eliminate the impediments to the aft translation of the low pressure turbine rotor that limits the amount of meshing that occurs in the event of a fan midshaft fracture. (A-98-125)
>
> Require General Electric Aircraft Engines to improve the ability of the CF6-50 and the CF6-80 series engines to prevent fractured low pressure turbine blades from being liberated through the engine cowling. (A-98-126)

Chairman HALL, Vice Chairman FRANCIS, and Members HAMMERSCHMIDT, GOGLIA, and BLACK concurred in these recommendations.



By: Jim Hall
Chairman

Enclosure

---

[17] The CF6-50 series engine, which was first certificated in 1972 and has about 2,008 engines in service, experienced 25 uncontained LPT failures. The CF6-80 series engine, which was first certificated in 1981 and has about 2,977 engines in revenue service, experienced 6 uncontained LPT failures. In comparison, the JT8D-1 through -17AR engine series, which was first certificated in 1961 and has about 9,975 engines in service, experienced about 55 uncontained LPT failures. The JT9D engine, which was first certificated in 1968 and has about 566 engines in service, experienced 64 uncontained LPT failures. All of the uncontained LPT failures in the GE CF6-50 and -80 series engines and in the P&W JT8D and JT9D engines were blade penetrations caused by fractures of the LPT blades or the fracture of the LPT turbine drive shaft.

National Transportation Safety Board
Washington, D.C. 20594

Brief of Incident

Adopted 07/31/98

NYC96IA036
FILE NO. 6000 12/06/95 JAMAICA,NY AIRCRAFT REG NO. APBAK TIME (LOCAL)- 21:50 EST

MAKE/MODEL -Boeing-747-240
ENGINE MAKE/MODEL -G E CF6-50E2
AIRCRAFT DAMAGE -Minor
NUMBER OF ENGINES -4
OPERATING CERTIFICATES -NONE
NAME OF CARRIER -PAKISTAN INTERNATIONAL AIRLINE
TYPE OF FLIGHT OPERATION -Scheduled
-International
-Passenger/cargo
REGULATION FLIGHT CONDUCTED UNDER -14 CFR 129

	FATAL	SERIOUS	MINOR/NONE
CREW	0	0	15
PASS	0	0	240

LAST DEPARTURE POINT - Same as Incident
DESTINATION - PARIS,FRANCE

AIRPORT PROXIMITY - Off airport/airstrip
AIRPORT NAME - JOHN F KENNEDY INTL
RUNWAY IDENTIFICATION - Unk/Nr
RUNWAY LENGTH/WIDTH (Feet) - Unk/Nr
RUNWAY SURFACE - Unk/Nr
RUNWAY SURFACE CONDITION - Unk/Nr

CONDITION OF LIGHT - Night (dark)

WEATHER INFO SOURCE- Weather observation facility

BASIC WEATHER - Visual (VMC)
LOWEST CEILING - 2500 FT Overcast
VISIBILITY - 20.000 SM
WIND DIR/SPEED - 260 /007 KTS
TEMPERATURE (F) - 39
OBSTR TO VISION - None
PRECIPITATION - None

PILOT-IN-COMMAND AGE - 59

CERTIFICATES/RATINGS
Airline transport
Multiengine land
INSTRUMENT RATINGS
Airplane

FLIGHT TIME (Hours)

TOTAL ALL AIRCRAFT - 15000
LAST 90 DAYS - 50
TOTAL MAKE/MODEL - 4000
TOTAL INSTRUMENT TIME - Unk/Nr

After takeoff, about 1,000 ft agl, the crew of the Boeing 747-240 heard a "thudding noise," followed by a loss of power in the number two engine. An engine shut down was completed, and an uneventful landing was made at the departure airport. The airplane was equipped with General Electric CF6-50E2 engines. Examination revealed that the low pressure turbine module, which included a portion of the fan mid shaft (FMS) and turbine rear frame, was missing. The airplane sustained damage to the left wing leading and tailing edge flaps, the left main wing landing gear doors, and the number one engine. Examination of the number two engine revealed a fracture face on the forward end of the FMS that showed multiple fatigue origins and circumferential cracks. There were also areas on the FMS that were heat affected. The FMS had previously been installed in a CF6-50 engine that had sustained a failure of the number 3 bearing inner race. The engine had been inspected by company personnel, and records did not reflect that they inspected the FMS for heat affected material. Fatigue cracks located in the heat-affected areas were found to have Sermetel paint and debris in the cracks.

NYC96IA036
FILE NO.6000 12/06/95 JAMAICA,NY AIRCRAFT REG NO. APBAK TIME (LOCAL)- 21:50 EST

Occurrence# 1 LOSS OF ENGINE POWER(TOTAL) - MECH FAILURE/MALF
Phase of operation TAKEOFF - INITIAL CLIMB

Findings
1. 1 ENGINE
2. TURBINE ASSEMBLY,SHAFT - FATIGUE
3. MAINTENANCE,INSPECTION OF AIRCRAFT - INADEQUATE - COMPANY MAINTENANCE PERSONNEL

The National Transportation Safety Board determines the probable cause(s) of this incident was:
failure of the number two engine fan mid shaft, due a fatigue fracture caused by a previous bearing failure, and failure of the operator's maintenance personnel to detect the cracks during subsequent inspections.