National Transportation Safety Board

Helicopter Case Studies

Chihoon “Chich” Shin
Aviation Engineering

Basic Helicopter Systems

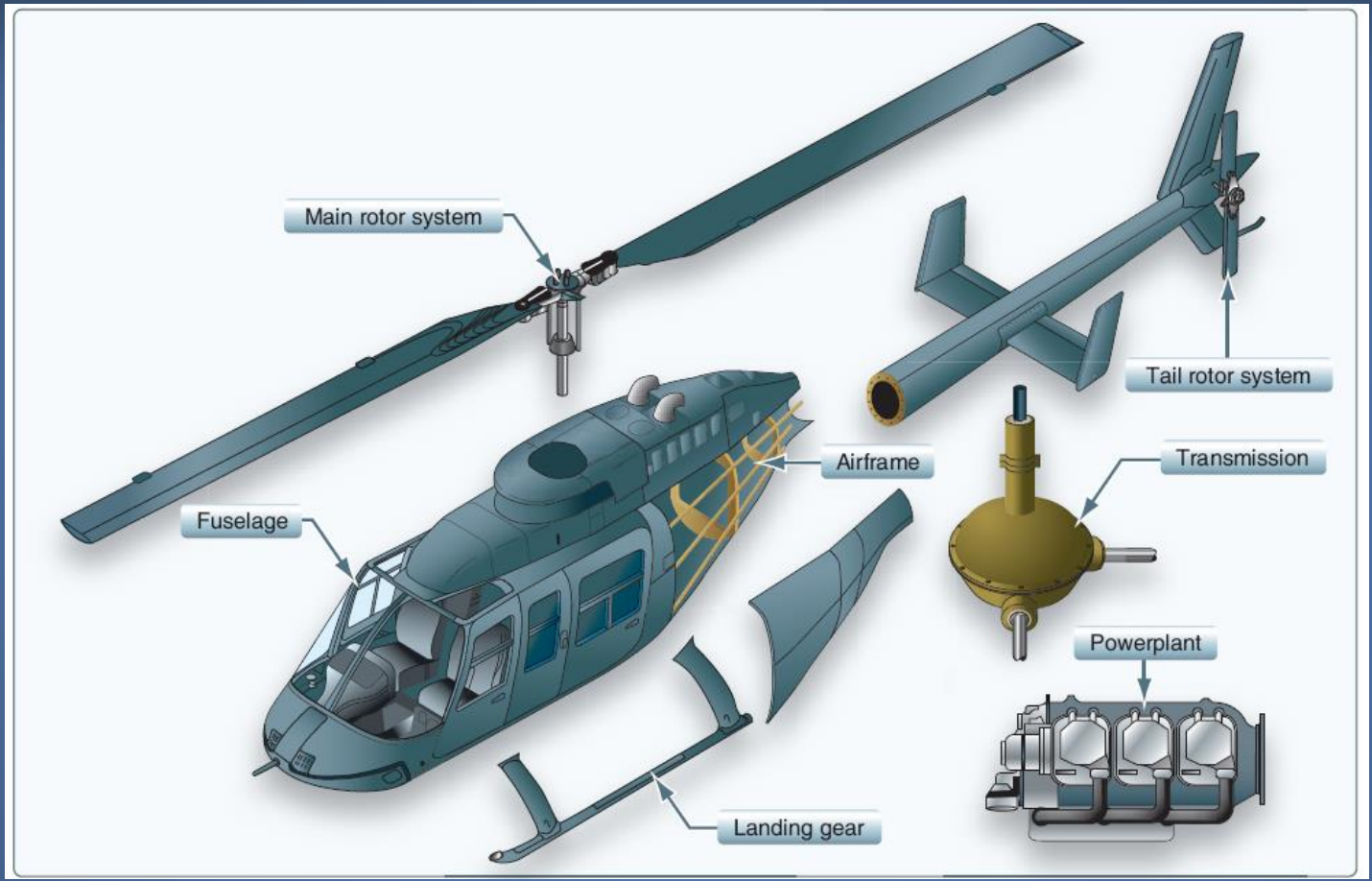

NTSB

Helicopter Controls

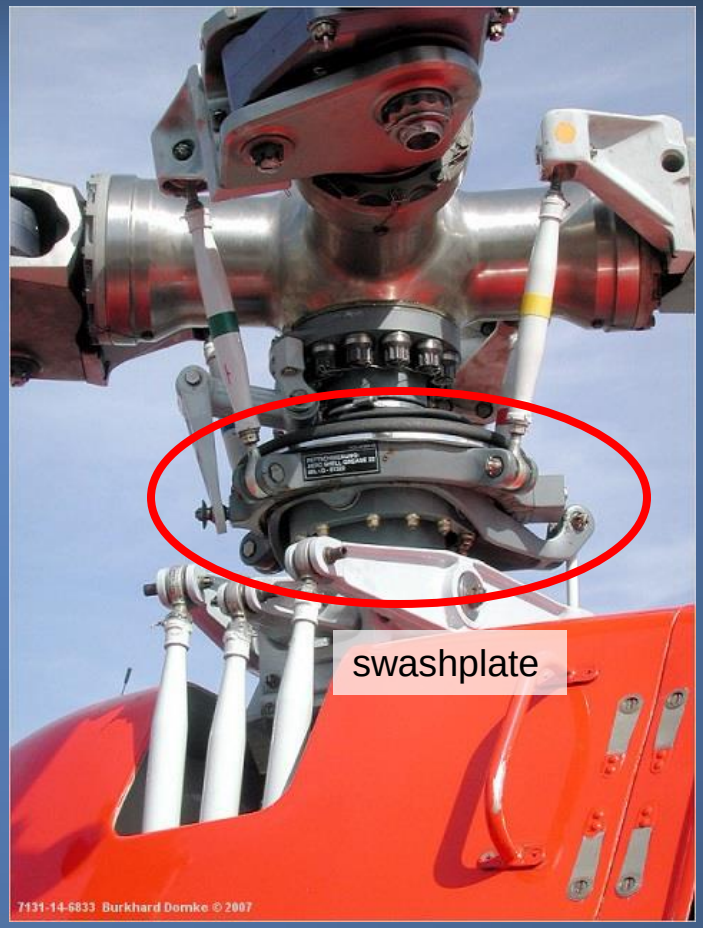

NTSB

So what's different?

Example	Airplane	Helicopter
Look for signatures of engine power and rotational energy.	Propeller blades, engine(s), fuel	Rotor blades, engine(s), fuel
Look at structural integrity.	Wings, fuselage	Rotor blades, fuselage
Look for control continuity (cables, lines, linkages, surfaces).	Continuity to ailerons, rudder, elevators	Continuity of controls to swashplate, main and tail rotor
Look at actuators and subsystems.	Hydraulic, electric	Hydraulic, electric

Case Study 1

- MD Helicopters 369D
- One Rolls-Royce 250-C20B
- Near Oso, WA
- July 22, 2014
- Injuries: 1 serious
- NTSB Case No. WPR14LA308

Background

- On July 22, 2014, about 1120 PDT, a MD Helicopters 369D collided with terrain and rolled downhill.
- Part 133 external load operation moving cut trees.
- One of the five main rotor blades found about 900 feet away.

Recovered Main Rotor Blades

Lab Examination

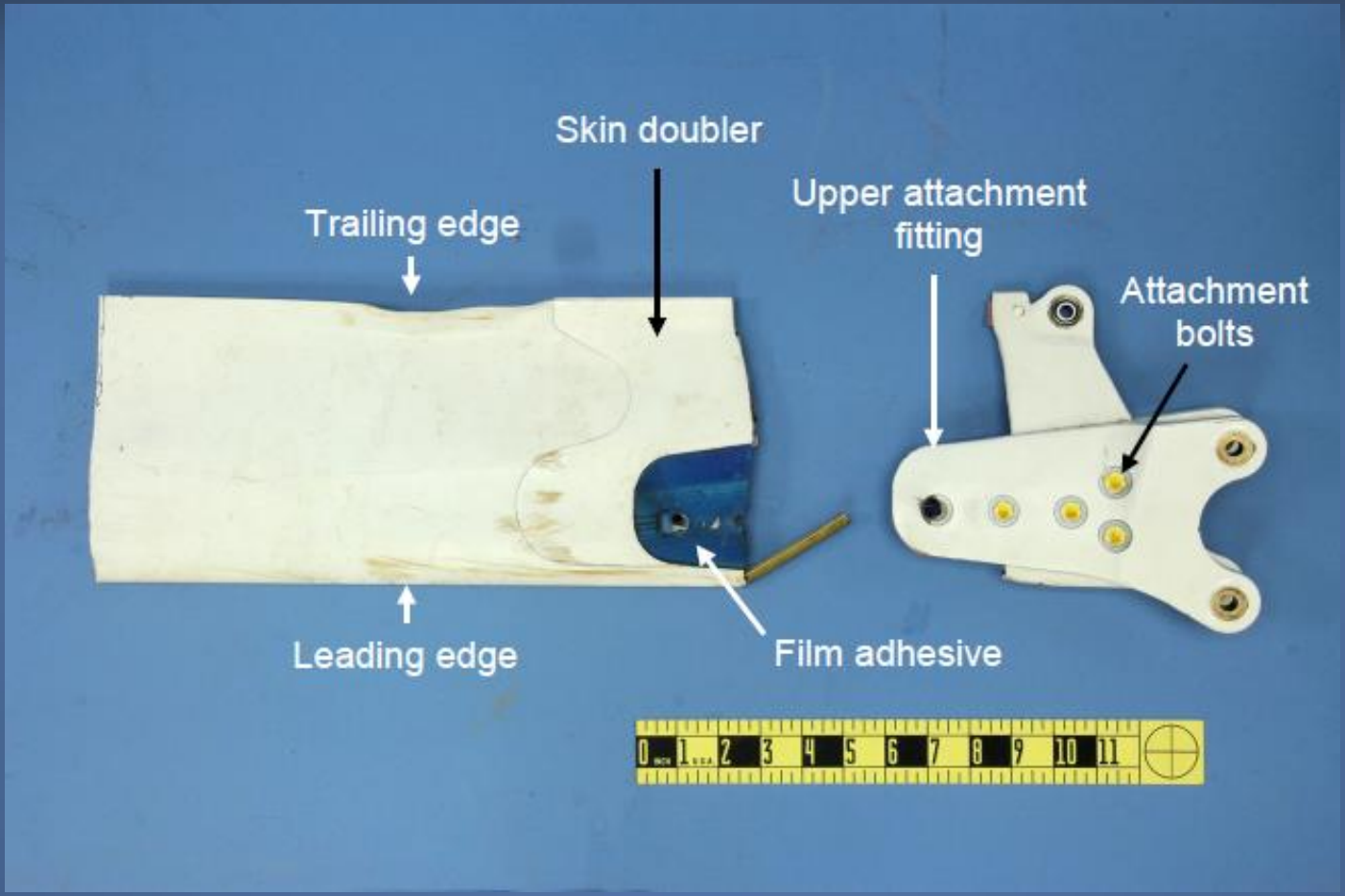

NTSB

Lab Examination

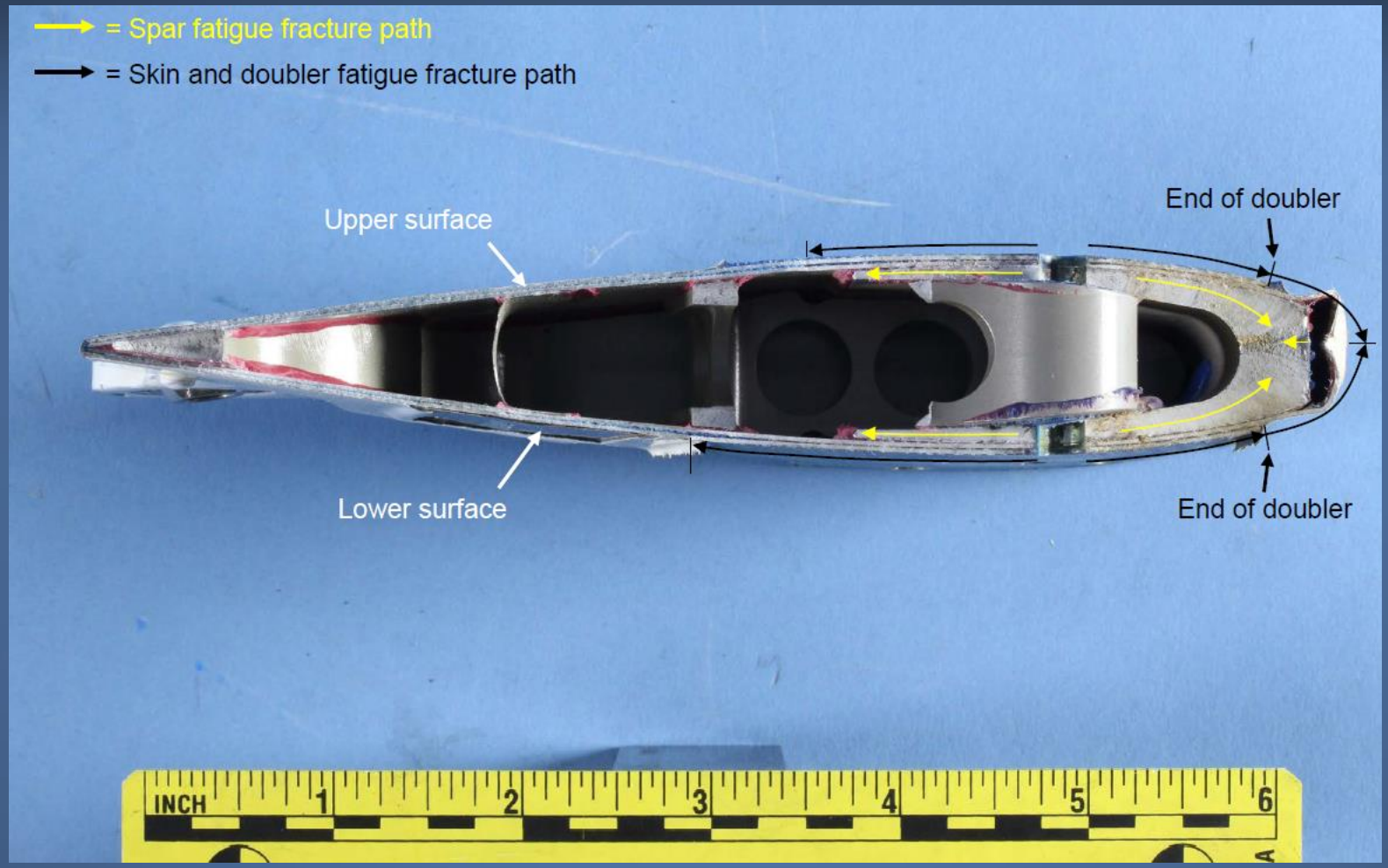

NTSB

Lab Examination

- Discovered fatigue fracture initiation at outboard attachment fitting holes (both upper and lower sides) of the spar.
- Tertiary fatigue initiation at spar leading edge.
- Evidence of disbonding between fitting and blade airfoil.

Lab Examination

- On one of the four remaining blades, found evidence of paint cracking around attaching fitting edges.
- Removal of fitting attachment bolts revealed disbonding between fitting and blade airfoil.

Lab Examination

NTSB

Lab Examination

NTSB

Torque Events (TE)

- Per MD Helicopters Maintenance Manual (CSP-HMI-2), a TE is defined as:
  - The transition to a hover from forward flight.
  - *Any external lift operation:*
    - *An external load is recorded as two (2) TEs (pick-up and drop-off).*
  - Hover taxi w/ no external load will typically result in no TEs.

FAA AD 2005-21-02

- For each main rotor blade that has accumulated >13,720 TEs and >750 hours, perform a blade TE inspection.
- Recurrent TE inspection at intervals not to exceed 200 TEs or 35 hours, whichever occurs first.
- *Accident helicopter blades accumulated about 1,123 hrs and 232,674 TEs since installation.*

NTSB

Pilot Statement

- Obtained an A&P certificate so he could perform the TE inspections.
- Pilot would average about 100 turns per hour (200 TEs).
- Would comply with the AD as best as he could, but usually didn’t do TE inspection until end of the day.

Pilot Statement

- For the AD inspection, he was looking primarily at the root fitting and metal for cracks, not necessarily the fitting bond line.
- Stated the intent of inspecting the [root fitting] bond line was not clear.

8. Main Rotor Blade Torque Event Inspection

(Ref. Figure 604)

NOTE: This inspection requires the use of a bright light.

(1). Lifting from the outboard end of the blade, lift blade off the droop stop.

(2). Inspect the bottom-side of the blade as follows:

(a). Using a bright light and 10x magnifying glass, inspect for chordwise cracks protruding from under root fitting and doubler (View C and Note 7).

(b). Inspect the area around the root fitting, doubler and skin for cracks.

(c). Inspect the attach lugs at the bushings for cracks.

(d). Inspect the entire length of the blade for cracks.

(e). Lower blade back onto droop stop.

(3). With blade resting on the droop stop, inspect the top-side of the blade as follows:

(a). Inspect the area around the root fitting, doubler and skin for cracks.

(b). Inspect the attach lugs at the bushings for cracks.

(c). Inspect the entire length of the blade for cracks.

(4). If any of the above defects are found, the main rotor blade is to be rejected and scrapped.

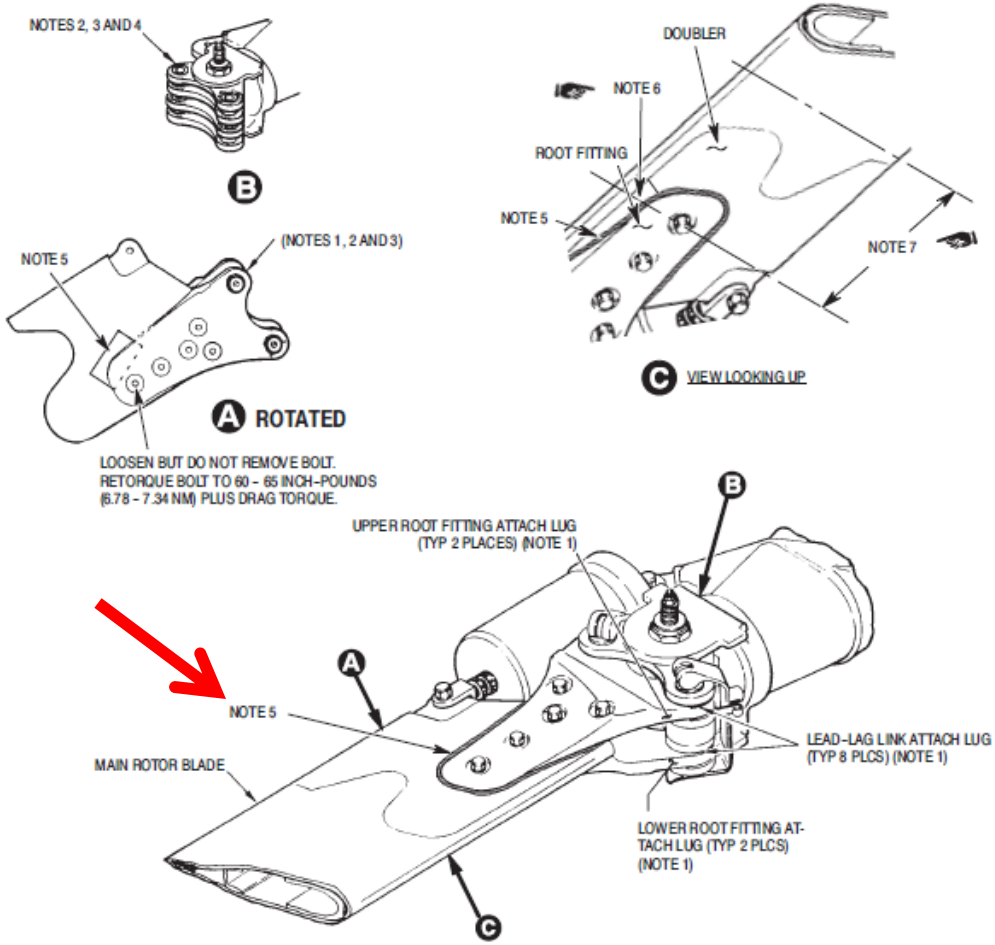

NOTES:

1. VISUALLY INSPECT AREAS OF ALL ROOT FITTINGS AND LEAD-LAG ATTACH LUGS FOR CRACKS OR BREAKS. INSPECT BLADE ATTACH BUSHINGS FOR LOOSENESS. IF LOOSE, REPLACE LEAD-LAG LINKS.
2. PAY PARTICULAR ATTENTION TO AREA AROUND ATTACH PIN HOLES IN LUGS.
3. SEAL ALL JUNCTIONS BETWEEN BUSHINGS AND ATTACH LUGS WITH SEALER OR PRIMER (CM318).
4. LEAD-LAG LINK ASSEMBLIES ARE SUB-ASSEMBLIES OF THE MAIN ROTOR HUB ASSEMBLY.
5. INSPECT MAIN ROTOR BLADE UPPER AND LOWER ROOT FITTING FOR MISSING OR CRACKED ADHESIVE.
6. USING BRIGHT LIGHT, INSPECT MAIN ROTOR BLADE DOUBLER FOR CRACKS. PAY PARTICULAR ATTENTION TO BOTTOM SIDE OF BLADE, JUST BEYOND ROOT FITTING AND IN LINE WITH ROOT FITTING ATTACH BOLTS.
7. USING A BRIGHT LIGHT AND 10X MAGNIFYING GLASS, INSPECT FOR CHORDWISE CRACKS PROTRUDING FROM UNDER ROOT FITTING AND DOUBLER.

Original Procedures (pre-accident)

NTSB

Resultant Safety Actions

- Service letters released by airframe and blade manufacturers to clarify TE inspection and highlight inspection requirement of fitting bond line cracks.
- Also modified the maintenance manual to better highlight the inspection requirement for fitting bond line cracks.

8. Main Rotor Blade Torque Event Inspection

(Ref. Figure 604)

CAUTION In the following steps, a crack might be difficult to detect if bright light is not used.

NOTE: It is recommended to only paint the inboard 24 inches (60.96 cm) gloss white to aid in crack detection. All blades must be painted alike. (Ref. Sec. 20-30)

NOTE: The bottom side of the blade is more susceptible to cracks.

(1). Lift blade off the droop stop from the outboard end of the blade.

(2). Inspect the bottom side of the blade as follows:

(a). Use a bright light and 10x magnifying glass, inspect for chordwise cracks protruding from under root fitting, doubler, and skin. (View C and Note 6 and 7).

(b). Inspect lower root fitting for missing or cracked adhesive/paint around the periphery of the root fitting. If this condition exists, perform the upper and lower root fitting inspection. (Ref. Main Rotor Blade Upper and Lower Root Fitting, Attach Lug and Lead-Lag Link Attach Lug Inspection (100 Hour)). (Figure 604, Note 5)

(c). Inspect the attach lugs at the bushings for cracks.

(d). Inspect the entire length of the blade for cracks.

(e). Lower blade back onto droop stop.

(3). With blade resting on the droop stop, inspect the top side of the blade as follows:

(a). Use a bright light and 10x magnifying glass, inspect for chordwise cracks protruding from under the root fitting, doubler, and skin. (Figure 604, Note 8)

(b). Inspect upper root fitting for missing or cracked adhesive/paint around the periphery of the root fitting. If this condition exists, perform the upper and lower root fitting inspection. (Ref. Main Rotor Blade Upper and Lower Root Fitting, Attach Lug and Lead-Lag Link Attach Lug Inspection (100 Hour)). (Figure 604, Note 5)

(c). Inspect the attach lugs at the bushings for cracks.

(d). Inspect the entire length of the blade for cracks.

(4). If any cracks are found, the main rotor blade is to be rejected and scrapped.

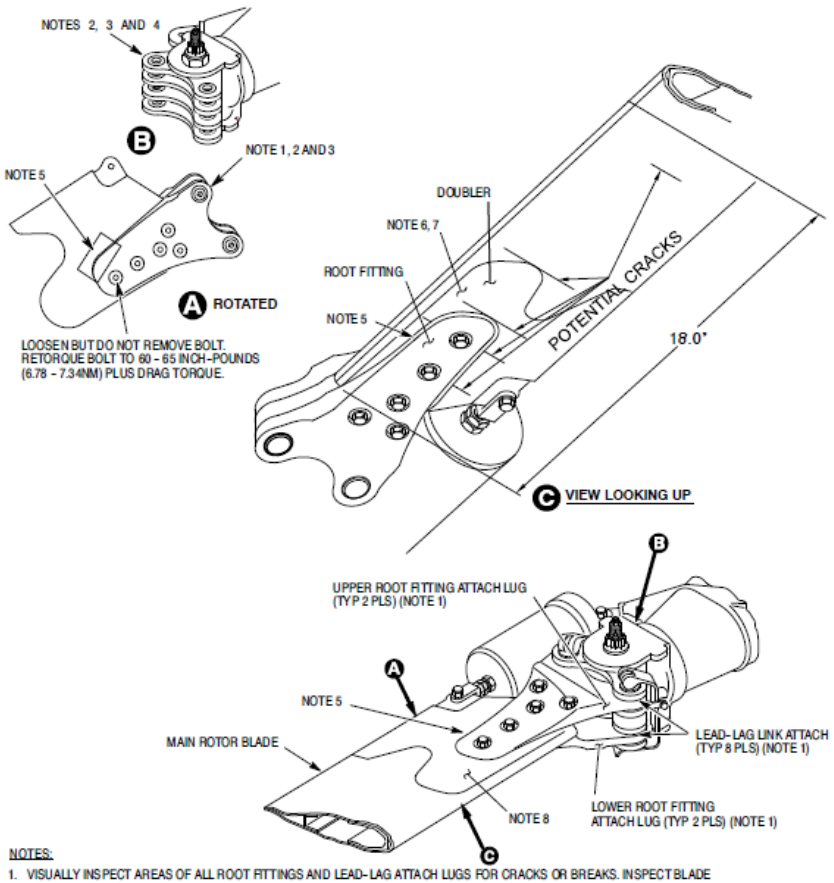

NOTES:

1. VISUALLY INSPECT AREAS OF ALL ROOT FITTINGS AND LEAD-LAG ATTACH LUGS FOR CRACKS OR BREAKS. INSPECT BLADE ATTACH BUSHINGS FOR LOOSENESS. IF LOOSE, REPLACE LEAD-LAG LINKS.
2. PAY PARTICULAR ATTENTION TO AREA AROUND ATTACH PIN HOLES IN LUGS.
3. SEAL ALL JUNCTIONS BETWEEN BUSHINGS AND ATTACH LUGS WITH SEALER OR PRIMER (CM318).
4. LEAD-LAG LINK ASSEMBLIES ARE SUB-ASSEMBLIES OF THE MAIN ROTOR HUB ASSEMBLY.
5. INSPECT THE MAIN ROTOR BLADE UPPER AND LOWER ROOT FITTINGS FOR MISSING OR CRACKED ADHESIVE.
6. USE A BRIGHT LIGHT AND 10X MAGNIFYING GLASS TO INSPECT THE BLADE WITH IT RAISED OFF THE DROOP STOP.
7. THE BOTTOM SIDE OF THE BLADE IS MORE SUSCEPTIBLE TO CRACKS. LIFT THE BLADE TO AID IN DETECTION OF CRACKS.
8. USE A BRIGHT LIGHT AND 10X MAGNIFYING GLASS TO INSPECT THE BLADE WITH IT RESTING ON THE DROOP STOP.

Modified Procedures (post-accident)

Accident Factors

- In-flight separation of a main rotor blade.
- Pilot/mechanic not performing the TE inspection at required interval.
- Pilot/mechanic not performing entirety of TE inspection when it was being accomplished.
- Lack of clear guidance in TE inspection procedures.

Probable Cause

- The pilot/mechanic's failure to properly perform required inspections of the main rotor blades at the necessary intervals, which resulted in an in-flight separation of a main rotor blade due to disbonding and fatigue cracking.
- Contributing to the accident was the lack of clear guidance in the helicopter maintenance inspection instructions, which allowed for the possible misinterpretation by maintenance personnel of their intent.

Case Study 2

- Eurocopter AS355 F1 helicopter
- Two Rolls-Royce (Allison) 250-C20F engines
- Near West Windsor, NJ
- September 15, 2012
- Injuries: 1 fatal
- NTSB Case No. ERA12FA563

Background

- On September 15, 2012, at about 1200 EDT, a Eurocopter AS355 F1 helicopter was substantially damaged when it impacted terrain following an in-flight breakup.
- Positioning flight to pick up passengers.

On Scene Examination

- The upper portion of the main transmission, main rotor mast and head, and two of three main rotor blades were found about 100 yards SW away from the main wreckage.
- The third main rotor blade was found about 270 yards ESE of the main wreckage.

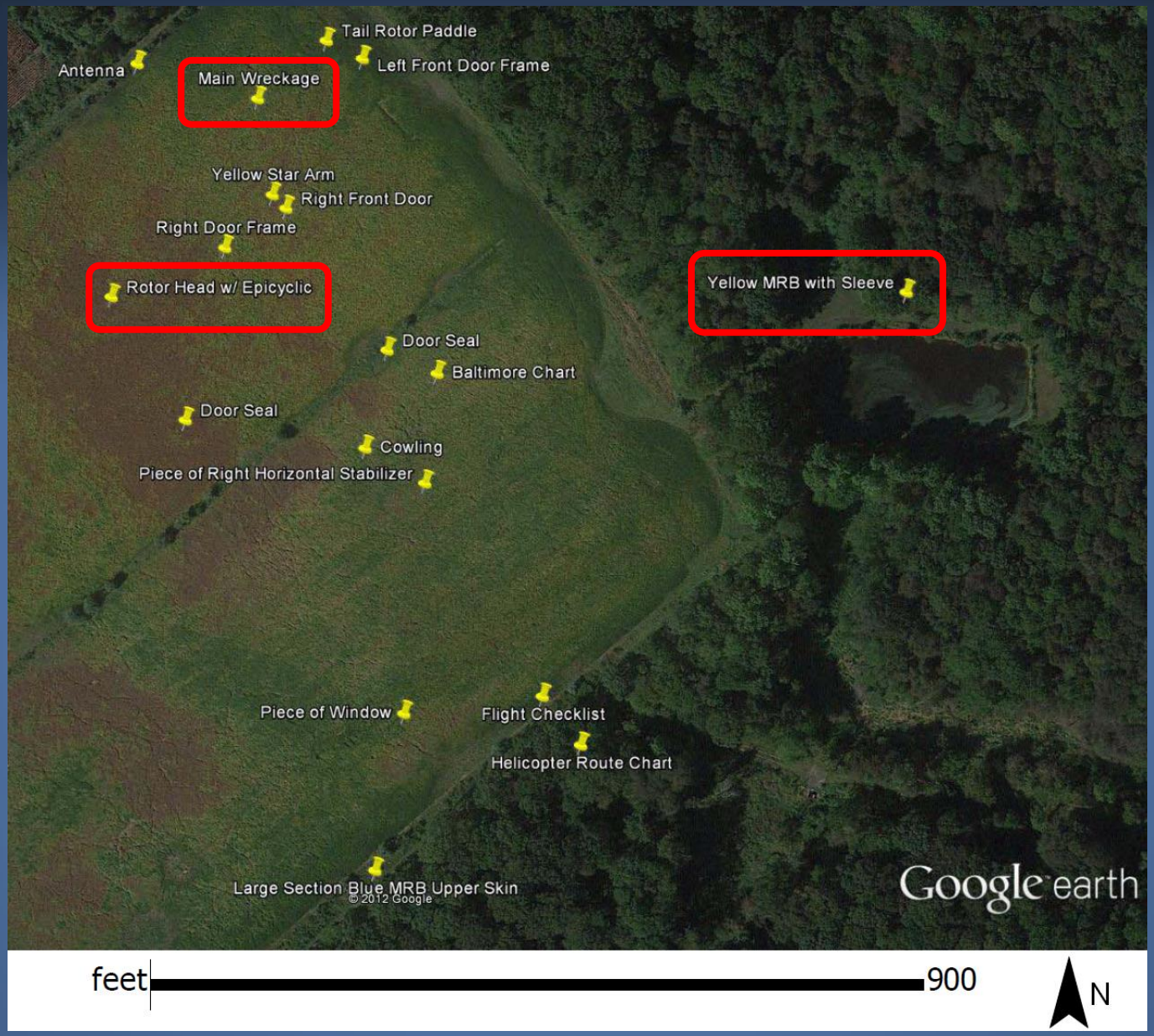
Tail Rotor Paddle
Antenna
Left Front Door Frame
Main Wreckage
Yellow Star Arm
Right Front Door
Right Door Frame
Rotor Head w/ Epicyclic
Yellow MRB with Sleeve
Door Seal
Baltimore Chart
Door Seal
Cowling
Piece of Right Horizontal Stabilizer
Piece of Window
Flight Checklist
Helicopter Route Chart
Large Section Blue MRB Upper Skin
© 2012 Google
Google earth
feet
900
N

NTSB

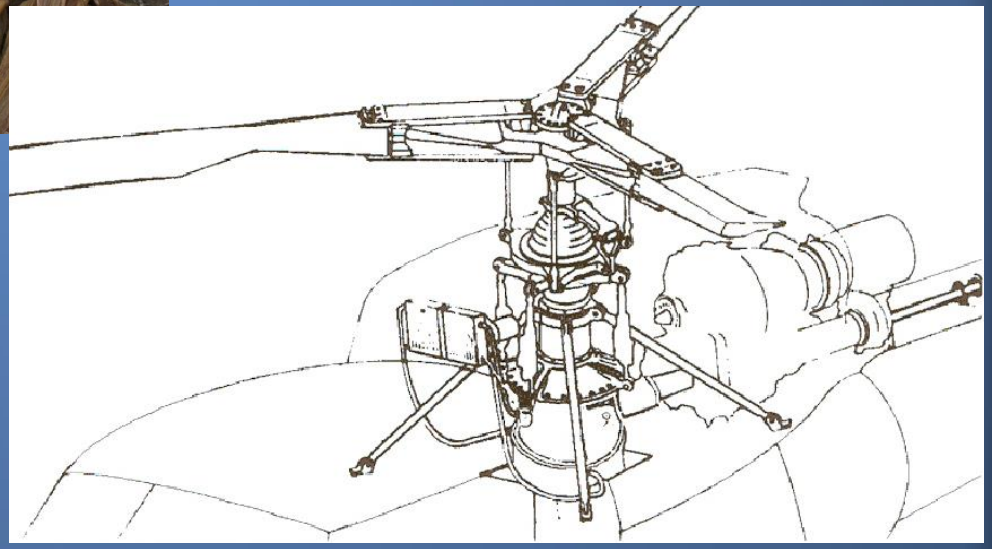

NTSB

On Scene Examination

- The left-roll and right-roll servo controls remained attached to the main transmission and swashplate.
- The fore-aft servo control was found separated.

Lab Examination

- The fore-aft servo control threads which mate to the upper rod end were found to be severely worn.
  - Consistent with wear over time versus upper rod end being pulled out during ground impact.
- Upper rod end threaded shank had fractured and was not recovered.

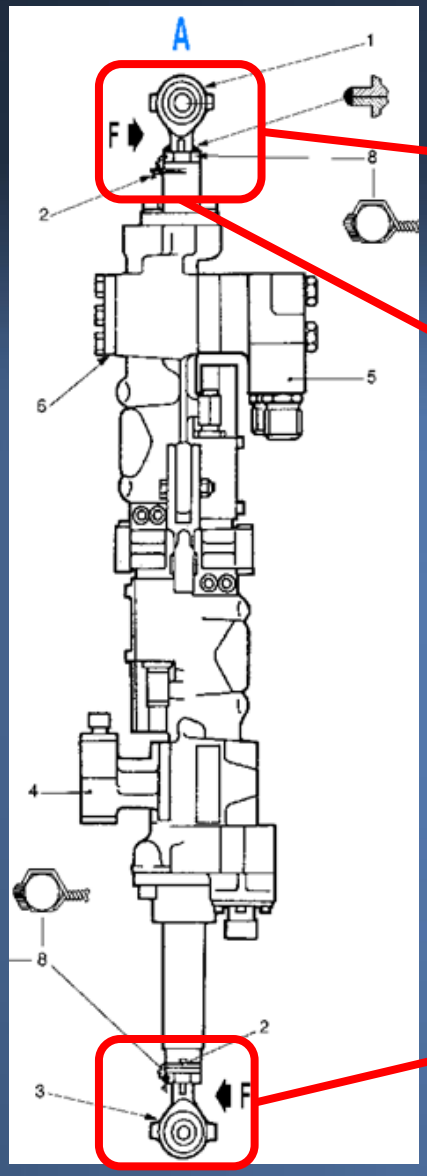

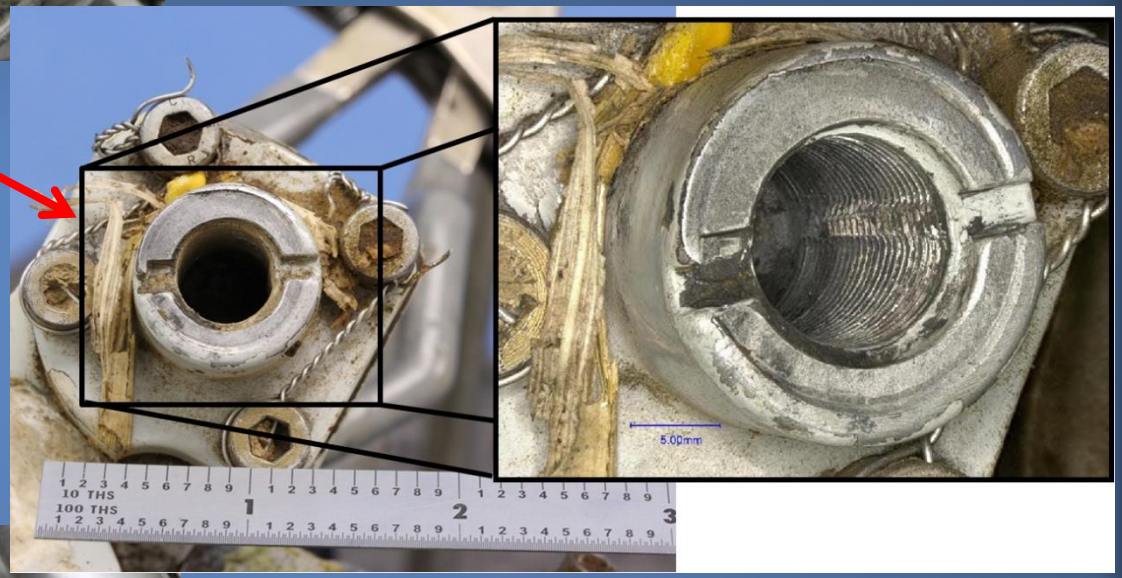

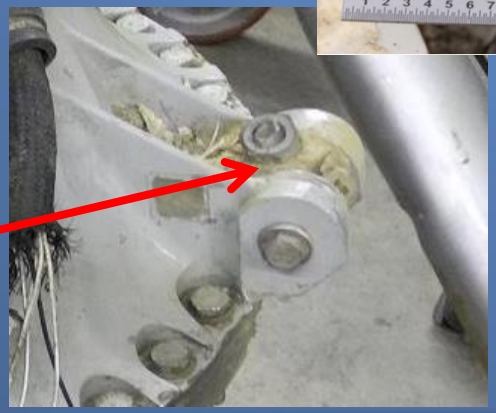

NTSB

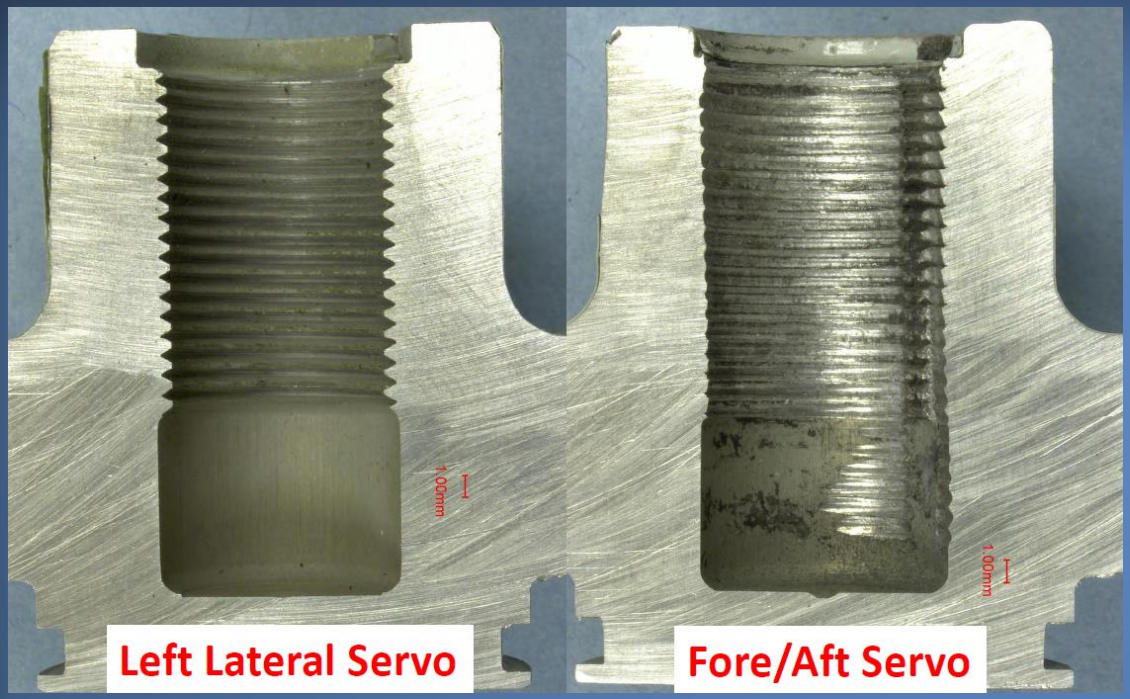

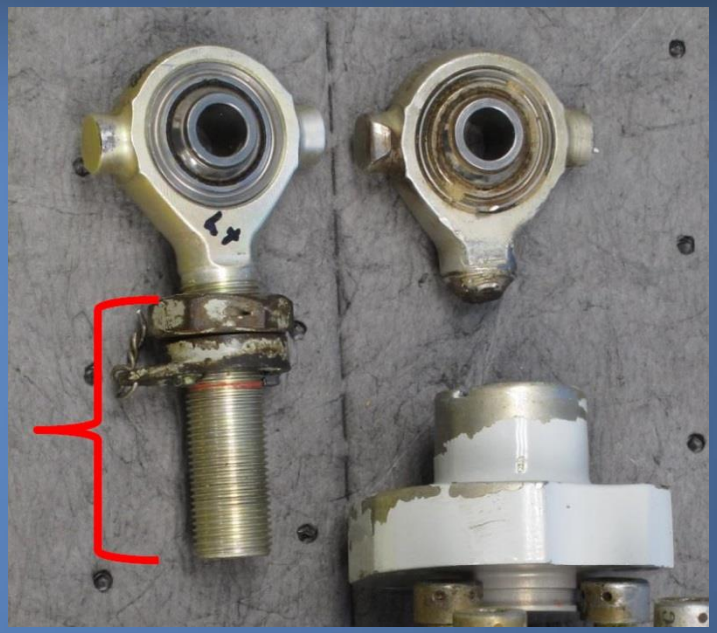

NTSB

Recent Maintenance

- Several maintenance actions performed about three months prior to the accident.
  - The upper rod ends for the left-roll and right-roll servo controls were replaced due to excessive rod end bearing play.
  - Loaner transmission installed earlier in the summer.

Maintenance Manual Procedures

- Operator stated they used mastinox and “thin coating of grease” on the threads.
- Maintenance manual calls for grease on threads of the upper rod end.
  - Grease has a torque correction factor of 0.4,
  - Mastinox does not have a torque correction factor.
  - Operator used published torque value, which already has torque correction factor incorporated.

Resultant Safety Actions

- Airframe manufacturer released a safety information notice regarding the accident findings and recurring visual and tactile inspections of the joint.

Probable Cause

- Disconnection of the upper rod end from the fore/aft servo due to severely worn threads, which resulted in a loss of control and separation of a main rotor blade during cruise flight. Contributing to the accident were incorrect maintenance procedures and inadequate maintenance inspections performed by the operator, and insufficient inspection criteria provided by the helicopter manufacturer.

Case Study 3

- Bell UH-1H helicopter
- One Honeywell (Lycoming) T53-L-13B engine
- Near Dove Creek, CO
- July 16, 2013
- Injuries: 1 fatal
- NTSB Case No. CEN13FA415

Background

- On July 16, 2013, about 0955 MDT, a Bell UH-1H helicopter was substantially damaged after a loss of control and ground impact.
- Part 133 Class B rotorcraft external load operation (basket load via long line).
- Ground witnesses stated pilot overshot intended drop site and the basket load impacted the ground, followed immediately by the 150 ft long line. At the same time, helicopter entered a right bank, followed by a steep left bank until ground impact.

Wreckage Examination

- All major components accounted for on scene.
- Evidence of engine providing power at the time of the accident.
- Hydraulic check valve in the area of undistorted aft belly compartment structure could be rotated by hand. Several rags soaks with hydraulic fluid found in the same compartment.
- Bulb filament analysis revealed hydraulic pressure annunciator and auxiliary master caution lights exhibited evidence of stretching. Remainder of annunciator bulbs did not appear stretched.

NTSB

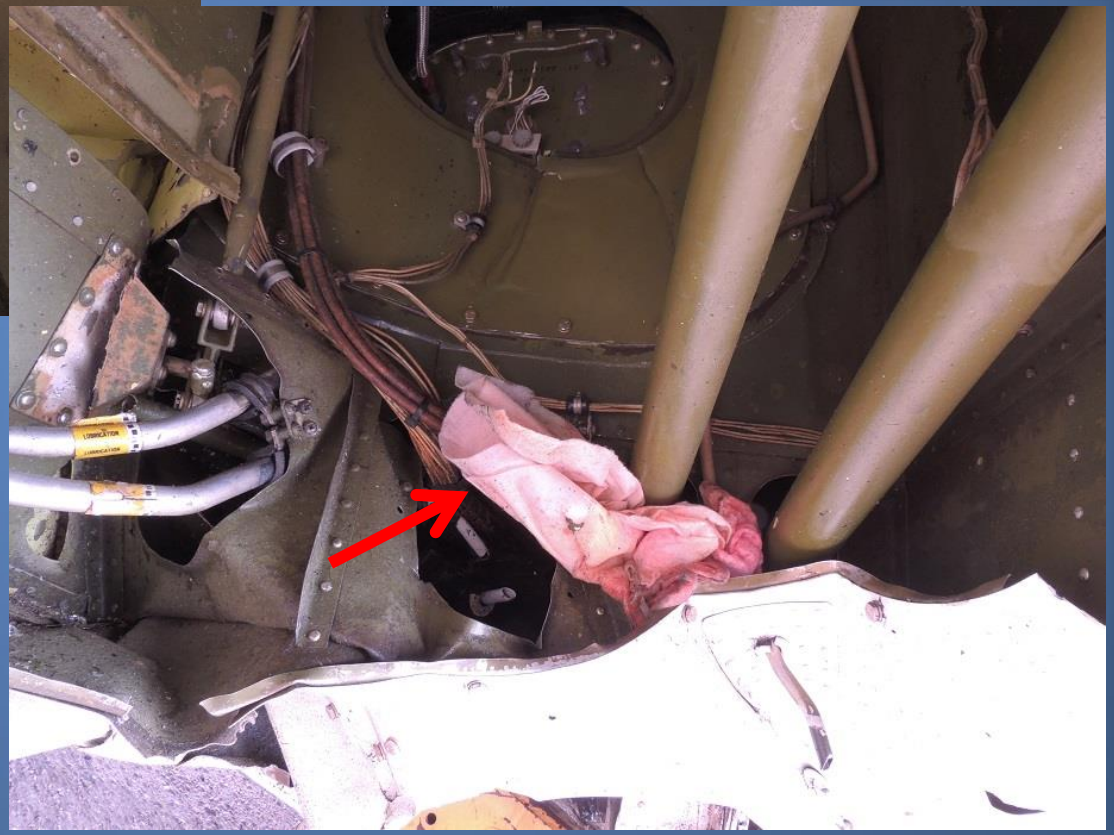

Lab Examination

- Bench testing of check valve revealed a severe hydraulic leak.
- Bunched teflon [tape] found on outlet threads of check valve.
- Stress corrosion cracks found on both inlet and outlet ends of check valve.

NTSB

inlet

outlet

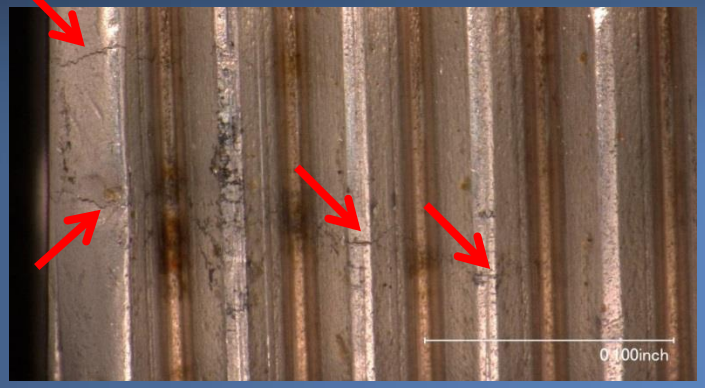

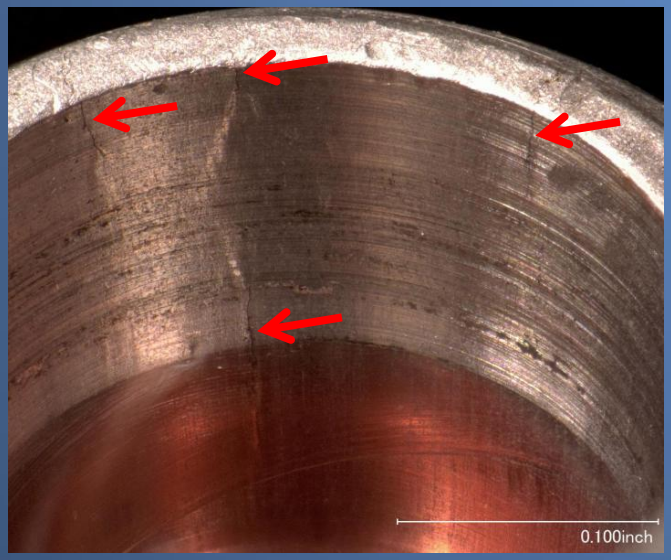

NTSB

Mechanic Statements

- Hydraulic leaks had been a long term challenge with the accident helicopter.
- Mechanic and accident pilot aware of a slow, weeping hydraulic leak in the aft belly of fuselage.
- Did not foresee the leak causing a significant issue.
- Replacement components for the area of the leak, were on order.
- Utilized teflon tape in an attempt to help the check valve fittings “grab” more effectively.

“Test Flight”

- Unbeknownst to NTSB and FAA, the operator performed a long line hydraulics off “test flight” at a higher altitude to simulate accident helicopter conditions.
- The operator stated that due to the high forces on the collective, the flying pilot would have a tendency to brace themselves on the cyclic to pull up on the collective stick.

Operations Culture

- The operator described the operating environment at the survey site as “tense”.
- Operator terminated a pilot after reports that said pilot was flying aggressively at the survey site.
- Survey personnel expressed dissatisfaction to the accident pilot regarding the termination of the previous pilot.

Operations Culture

- Survey personnel were “timing” the accident pilot and informing the operator that the accident pilot was taking “50% longer” than the terminated pilot in performing the same operations.
- Accident pilot had expressed concern about losing the survey contract. Mechanic stated feeling pressure to ensure flights were completed.

Resultant Safety Actions

- TC holder working with FAA on flight manual change regarding the potential for over-controlling helicopter at low airspeeds after a loss of hydraulic pressure.
- TC holder working to develop a STC for a low hydraulic fluid level warning system.

Probable Cause

- Pilot-induced oscillations caused by the loss of hydraulic assist of the flight controls due to an excessive loss of hydraulic fluid during a critical phase of flight, which resulted in ground impact. Contributing to the accident was an inadequate analysis of the hydraulic fluid leak by the pilot and mechanic.

Case Study 4

- Eurocopter EC130 B4 helicopter
- One Turbomeca Arriel 2B1 engine.
- Near Seminole, OK
- January 2, 2013
- Injuries: 4 serious
- NTSB Case No. CEN13FA121

Background

- On January 2, 2013, at about 1245 CST, a Eurocopter EC130 B4 sustained substantial damage after a hard landing shortly after takeoff from Seminole Municipal Airport (KSRE).
- Air ambulance positioning flight.
- Initial reports stated a possible in-flight loss of engine power.

Pilot Statement

- Received a standby call for a response to an accident scene.
- Pilot checked weather.
- Helicopter was parked outside.
- Pilot removed helicopter inlet cover and performed walk around inspection of the helicopter.
- Started the helicopter normally.

Pilot Statement

- Shortly after takeoff, while climbing through 1,600 and 1,700 ft MSL, pilot heard a sound like something had struck the helicopter, and the engine stopped producing power.
- Performed an autorotation.
- While maneuvering to land on a field, pilot saw a previously undetected barbed wire fence.
- Increased collective pitch to clear fence, applied aft cyclic, then increased collective.
- Did not recall the helicopter landing.

On Scene Examination

- Ground scars consistent with helicopter rotating about 180º from initial ground impact to resting position.
- All major helicopter components were accounted for at the accident scene.
- Main rotor blades exhibited signatures consistent with low rotational energy at ground impact.

NTSB

On Scene Examination

- Engine cowling was found in the closed position with no evidence of abnormal damage.
- Air filter showed no evidence of damage.
- No blockages or large pieces of debris found on either side of air filter.
- Air intake duct drain hole showed no evidence of blockages.
- Engine remained installed on the airframe.

NTSB

On Scene Examination

- Engine fuel, oil, and electrical connections remained intact.
- Fuel sample tested negative for the presence of water.
- Removal of air intake duct revealed four axial compressor blades exhibited deformation, in the direction opposite of normal rotation, on outboard tips of their leading edges.
  - Consistent with “soft body” (e.g. birds, plastic, ice) FOD damage.

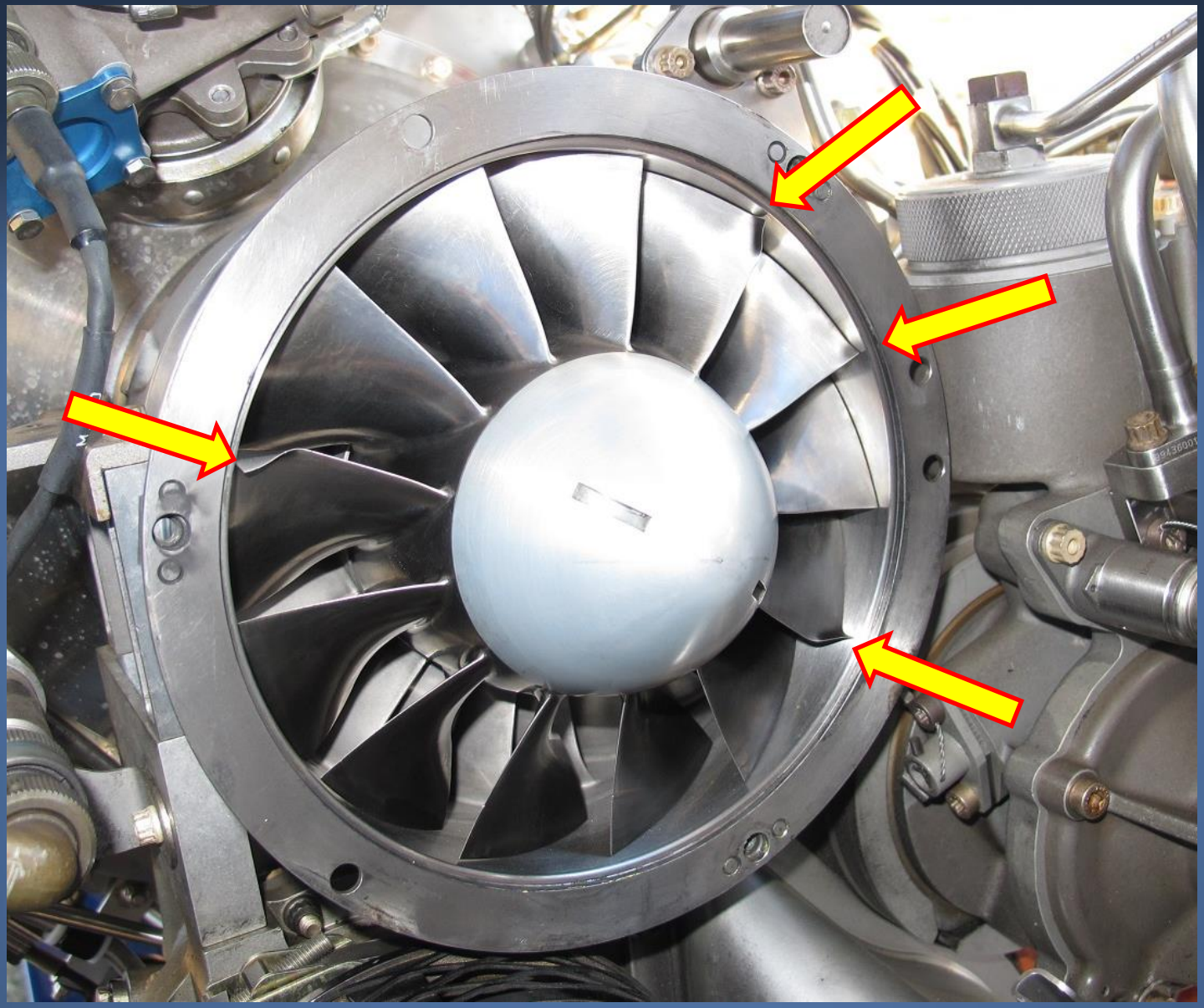

Engine Test

- The engine was tested on a Turbomeca test stand.
- The engine did not exhibit evidence of anomalies that would have precluded normal operation prior to the accident.

Helicopter Recent History

- Helicopter landed in KSNE on 12/30/12.
  - Parked outside.
- Engine inlet cover remained uninstalled until it was installed on 1/1/13.
- Helicopter did not fly on 12/31/12 and 1/1/13 but remained parked outside.
- On the morning of the accident (1/2/13), helicopter mechanic performed an airworthiness inspection of the helicopter.

Weather Data

- On 12/30/12, at 2255 CST, KSNL reported drizzle and rain.
- On 12/31/12, KSNL reported drizzle and rain until 1015 CST, when mist and fog prevailed for the majority of the day. Temperatures that day ranged from 36º F to 43º F.
- On 1/1/13, KSNL reported mist and fog prevailed until about 1135 CST when clouds remained overcast. Temperatures that day ranged from 41º F in the early morning hours, trending downward as the day progressed to a low of 32º F.
- On 1/2/13, KSNL reported temperatures below freezing (27º F at lowest) and overcast sky until about 1055 CST.
  - KSNL reported temperature at 39º F at 1235 CST.
  - Accident flight was at about 1245 CST.

Engine Air Inlet Inspections

- According to operator's helicopter mechanic, during the airworthiness check conducted the morning of the accident, the engine cowling was not opened to inspect the air intake and underneath the air filter.
- The operator's preflight/airworthiness checklist stated "Engine air intake – Clear (water, snow, foreign object)."
- Eurocopter EC130 B4 Maintenance Manual section for "Operating in Cold Weather Conditions" contains a step to "manually and visually check for snow and ice inside the air intake duct up to the first stage compressor."

Timeline

Helicopter landed at KSRE. Rain and drizzle reported.

Helicopter inlet cover installed. Temperatures trend toward freezing.

12/30/12 → 12/31/12 → 1/1/13 → 1/2/13 → **Accident**

Helicopter remained parked outside. Drizzle and rain changes to mist and fog.

Temperatures were below freezing the morning of the accident flight. Inlet cover remains installed until airworthiness check.

Accident Factors

- Hard landing
- In-flight loss of engine power
- Inadequate protection of air intake after helicopter was parked
- Inadequate inspection of the air intake duct

Resultant Safety Actions

- FAA re-released an SAIB reminding operators of precautions to take during cold weather operations.
- Helicopter and engine manufacturers released similar safety notices to operators.
- The operator released an internal notice on engine operations in cold weather conditions.

Probable Cause

- The loss of engine power due to ice ingestion. Contributing to the accident was maintenance personnel's delayed decision to install the helicopter's engine inlet cover until after the engine had been exposed to moisture and freezing temperatures and their inadequate daily preflight/airworthiness checks, which did not detect the ice formation.

National Transportation Safety Board

This is an animation of a
S-61 "Sea king" helicopter
Rotorhead assembly.

Enjoy the movie,

Karel Kinable