PB82-131707

Highway Accident Report: ARA Services, Inc.
Tour Bus, Denali National Park and Preserve
(Mt. McKinley National Park), Alaska
June 15, 1981

(U.S.) National Transportation Safety Board
Washington, DC

28 Sep 81

U.S. Department of Commerce
National Technical Information Service
NTIS

TECHNICAL REPORT DOCUMENTATION PAGE

1. Report No. NTSB-HAR-81-7	2. Government Accession No. PB82-131707	3. Recipient's Catalog No.
4. Title and Subtitle Highway Accident Report-- ARA Services Inc., Tour Bus, Denali National Park and Preserve, (Mt. McKinley National Park), Alaska, June 15, 1981		5. Report Date September 29, 1981
		6. Performing Organization Code 350003
7. Author(s)		8. Performing Organization Report No.
9. Performing Organization Name and Address National Transportation Safety Board Bureau of Accident Investigation Washington, D.C. 20594		10. Work Unit No. 3370
		11. Contract or Grant No.
12. Sponsoring Agency Name and Address NATIONAL TRANSPORTATION SAFETY BOARD Washington, D. C. 20594		13. Type of Report and Period Covered Highway Accident Report June 15, 1981
		14. Sponsoring Agency Code

15. Supplementary Notes

The subject report was distributed to NTSB mailing lists: 8A, 8C and 16.

16. Abstract

About 8:00 p.m. A.s.t., on June 15, 1981, a 40-passenger tour bus, eastbound on Denali Park Road, Denali National Park, Alaska, ran off the right edge of the roadway at a very slow speed and rolled to its right down a hillside. Twenty-five of the thirty-two occupants were ejected as the bus rolled 2 1/4 times down the hillside. Twenty-six occupants were injured, five were killed, and the bus sustained moderate damage.

The National Transportation Safety Board determines that the probable cause of this accident was the failure of the student driver to give adequate attention to the driving task and his misjudgment of his lateral position on the road which resulted in the bus leaving the right edge of the roadway and rolling down the hillside. Contributing to the accident was the driver's lack of training and experience in this tour bus operation. Contributing to the severity of the occupants' injuries and to the fatalities was the lack of occupant restraints which permitted the ejection of most of the occupants.

17. Key Words Tour bus; ran off road; driver training; driver narration; ejection of passengers; occupant restraints; convex mirrors; narrow road; Park road standards.		18. Distribution Statement This document is available to the public through the National Technical Information Service Springfield, Virginia 22161 *(Always refer to number listed in item 2)*	
19. Security Classification (of this report) UNCLASSIFIED	20. Security Classification (of this page) UNCLASSIFIED	21. No. of Pages 27	22. Price

NTSB Form 1765.2 (Rev. 9/74)

CONTENTS

NATIONAL TRANSPORTATION SAFETY BOARD
WASHINGTON, D.C. 20594

HIGHWAY ACCIDENT REPORT

Adopted: September 29, 1981

ARA SERVICES, INC., TOUR BUS
DENALI NATIONAL PARK AND PRESERVE
(MT. McKINLEY NATIONAL PARK), ALASKA
JUNE 15, 1981

SYNOPSIS

About 8:00 p.m. A.s.t., on June 15, 1981, a 40-passenger tour bus, eastbound on Denali Park Road, Denali National Park, Alaska, ran off the right edge of the roadway at a very slow speed and rolled to its right down a hillside. Twenty-five of the thirty-two occupants were ejected as the bus rolled 2 1/4 times down the hillside. Twenty-six occupants were injured, five were killed, and the bus sustained moderate damage.

The National Transportation Safety Board determines that the probable cause of this accident was the failure of the student driver to give adequate attention to the driving task and his misjudgment of his lateral position on the road which resulted in the bus leaving the right edge of the roadway and rolling down the hillside. Contributing to the accident was the driver's lack of training and experience in this tour bus operation. Contributing to the severity of the occupants' injuries and to the fatalities was the lack of occupant restraints which permitted the ejection of most of the occupants.

INVESTIGATION

The Accident

At 3:00 p.m. A.s.t., 1/ on June 15, 1981, a 40-passenger 1979 Bluebird Tour bus departed the Denali Park Hotel, Denali National Park, Alaska, with a student driver, instructor driver, and 30 passengers on board. The student driver drove about 65 miles to the Eielson Visitors Center while the instructor driver offered driving suggestions to the driver and used the microphone of the public address system to "interpret" what the bus passengers were seeing along the route. The bus arrived at Eielson Visitors Center about 7:00 p.m. and departed about 7:50 p.m. for the return trip to the hotel. While returning, the student driver drove the bus and used the microphone headset to perform the narrative. The instructor driver sat on the floor in the stepwell near the door so he would not obstruct the view of the passengers.

Within a mile of the visitors center, the student driver stopped the bus to permit the passengers to watch and photograph several caribou that were at the right side of the roadway. After several minutes, according to the student driver, the bus started moving slowly forward so as not to startle the animals. The bus traveled approximately 1/2 mile before leaving the roadway. The student driver believed that the bus was in the center of the road, but realized he was over the road edge when he felt his right front wheel drop down the hillside. He estimated that the speed of the bus at this time was 10 to 15 mph. He tried to return the bus to the road by steering to the left but the wheel in the dirt would not move to the left but went farther right and then dropped lower as gravel

1/ All times herein are Alaska standard, time based on the 24-hour clock.

scraped along the undercarriage of the bus. Witnesses later indicated that they were first aware of a problem as the bus was starting to tip to the right and stated that the right rear wheel dropped down as though the road had collapsed and the bus started to roll to the right. The bus rolled over slowly several times, some witnesses estimated as many as four to six times, but physical evidence indicated 2 1/4 times. (See figures 1 and 2.) The bus which had been traveling east came to rest 33 feet south of the roadway and about 35 feet below the elevation of the road.

Injuries to Persons

Injuries	Drivers	Passengers	Total
Fatal	0	5	5
Nonfatal	1	25	26
None	1	0	1
Totals	2	30	32

Vehicle Information

The blunt-nose, 40-passenger bus was a 1979 Blue Bird (VIN F45175). It was designated by its owner, ARA Services, Inc., as unit No. 47. It was equipped with a Chevrolet V8-427A gasoline engine, serial No. T02059ZA3, with an Allison MT643 4-speed automatic transmission and a Rockwell R-155 (ratio 6.83:1) rear axle. The steering gear was a TRW (Ross Gear Division) "Hydrapower" HF64 and the tire sizes were 10:00 x 20. The bus had a gross vehicle weight of 23,994 pounds, and the speedometer indicated 42,332 miles at the time of the accident.

Each of the five large (57 x 27 inches) window openings on each side of the bus was designed to serve as an emergency exit. Each window included two separate panes, each of which was designed to slide fore and aft. Both panes were mounted in a single frame which was attached to the bus body by two hinges at the top and capable of being opened for emergency exit. (See figure 3.) The windows were equipped with a simple positive lock design and a buzzer type warning device to alert the driver when the latching mechanism was being operated.

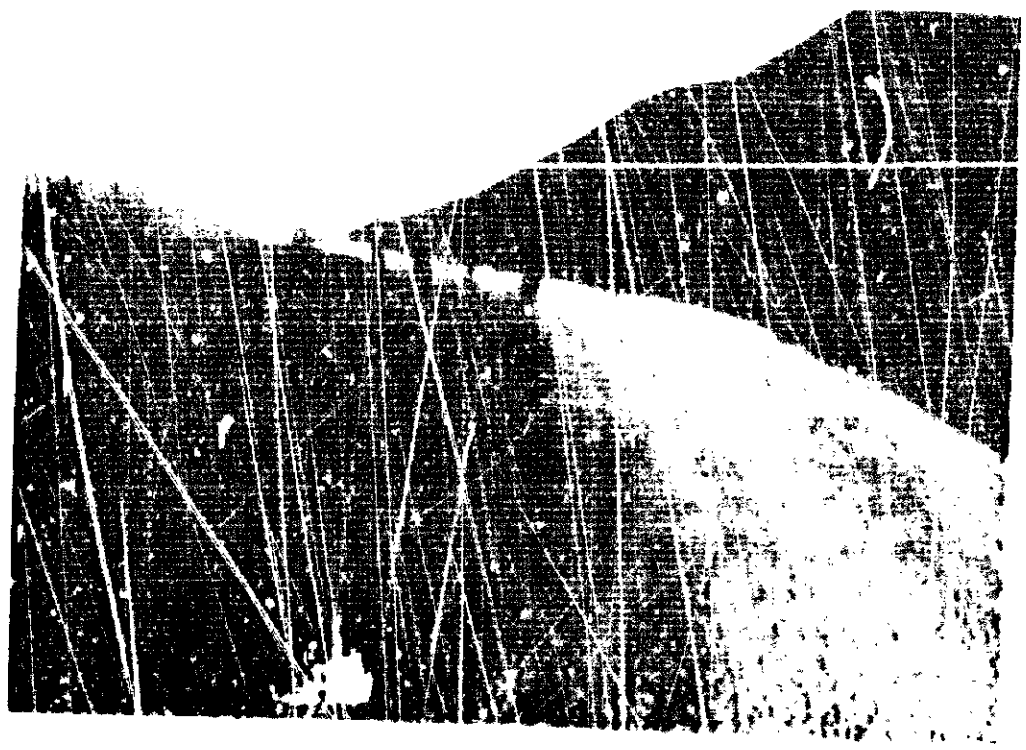

Figure 1.--Eastbound view of area vehicle ran off road.

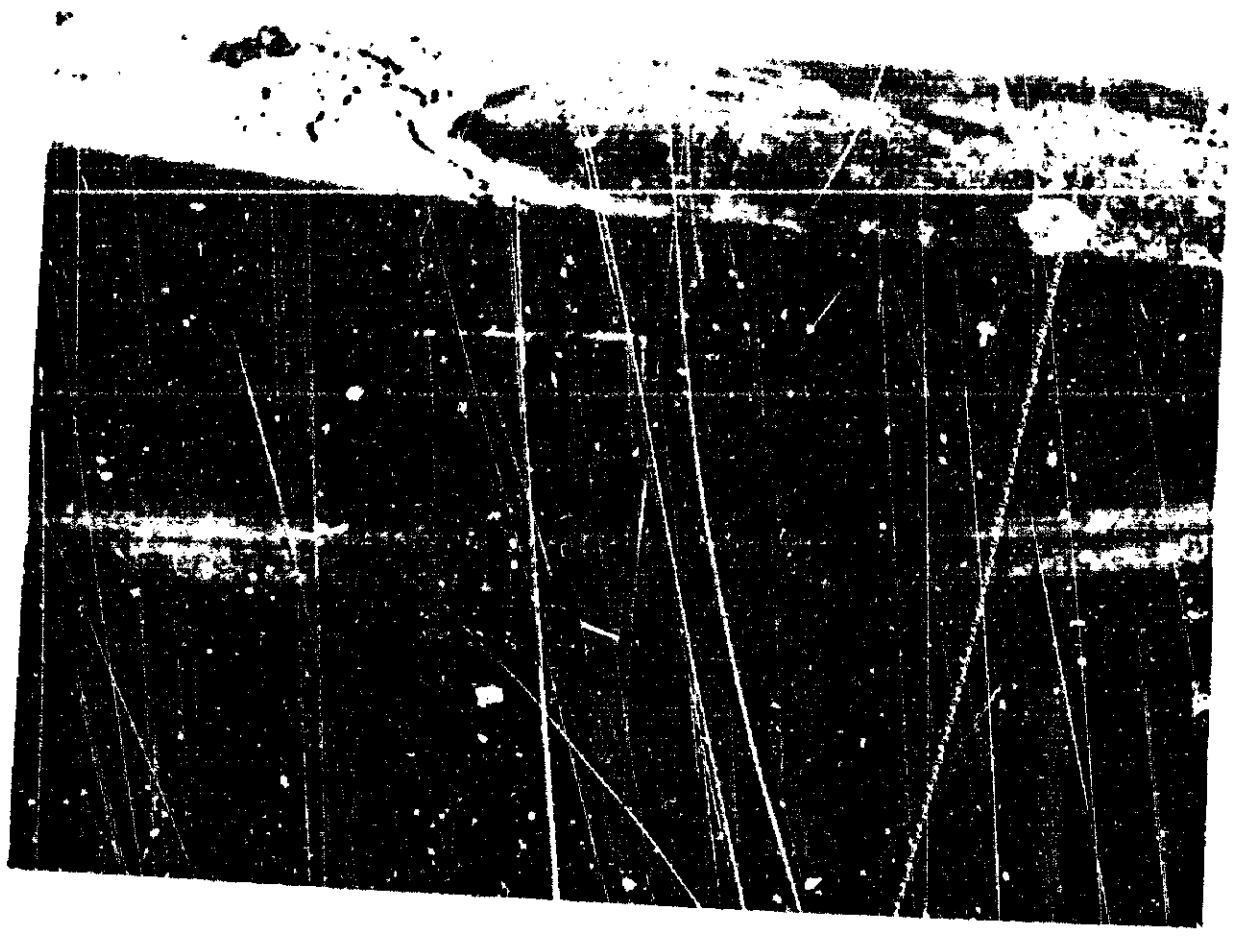

Figure 2.--Vehicle at rest south of the roadway.

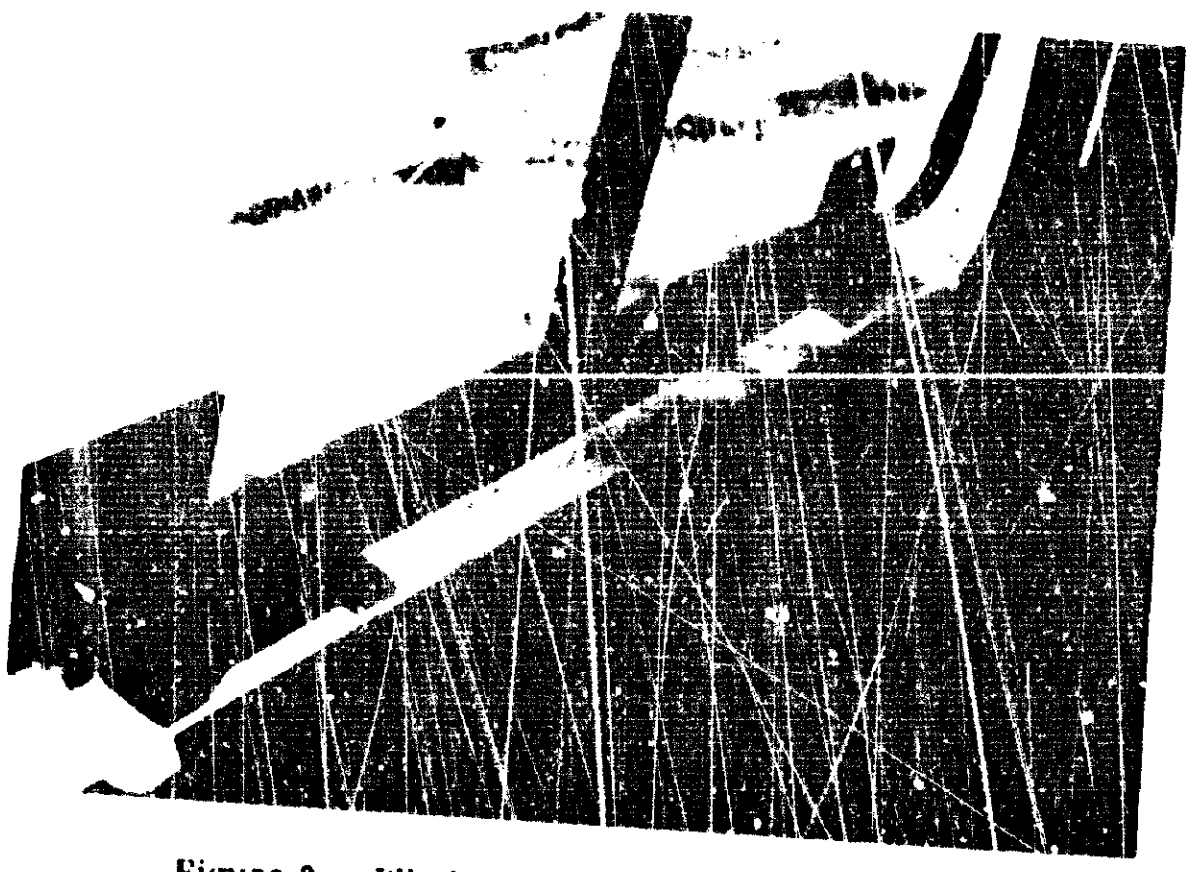

Figure 3.--Window latch in open position.

The rearview mirrors on the bus provide a limited view for the driver in determining the position of the bus on the roadway. Figure 4 illustrates the driver's rearview mirror field of vision from a similar make and model tour bus. The views do not provide a view of the roadway at the forward axle of the bus.

Vehicle Damage

Safety Board investigators conducted a postcrash inspection on June 17, 1981, at the accident site with the bus in its final postcrash attitude and location. The vehicle was then towed to the National Park Service's maintenance facility for further inspection on June 18 and 19.

The bus body was still securely attached to the chassis frame although the top of the body was permanently deformed 7 1/2 to 11 inches toward the left. The sides were not damaged significantly. (See figures 5, 6, and 7.) The windshield and most of the side window glass had separated from the frames, and the horizontal exit window at the rear was open. The door was damaged. All chassis components appeared to be free of damage. Portions of the inside roof panels near the sides of the bus were distorted outward. (See figure 8.) There was no evidence of exterior penetration by objects, and the interior was not diminished in size. A detailed inspection of the steering, brakes, and tires indicated that they were in good operating condition. The two front tires were Bridgestone 10:00 R 20's with 11/32- to 12/32-inch tread depth inflated to about 100 and 110 psi. The four rear tires were Michelin 10:00-20's with 15/32- to 16/32-inch tread depth inflated to between 95 and 100 psi.

The four service brakes were conventional air, S-cam, drum-type with A.C. (Division of GMC) FMVSS-121 antilock equipment on the rear axle. The rear axle air chambers were equipped with piggyback spring brake packages. The air system had retained about 50 p.s.i. pressure during the 2 days following the accident. It was necessary to physically release the spring pressure from the rear slack adjusters to move the vehicle during the retrieval operation.

The following slack adjustment travel distances were measured:

	Front Axle (Type 24) (Inches)	Rear Axle (Type 30) (Inches)
Left	2 1/4	1 3/8
Right	1 1/4	1 1/4

There was at least 3/16 inch of lining material between the wearing surface of the brake linings and the tops of the brake linings-to-brake shoe rivets.

Driver Information

The 23-year-old student driver was operating his first passenger trip into the Park. He possessed a valid Montana chauffeur's license with no restrictions. He had started driving an automobile with a learner's permit at age 14 and had been taught to drive by his father and older brothers. Most of his experience had been gained while operating passenger cars and pickup trucks; however, he had driven a 78-passenger school bus for

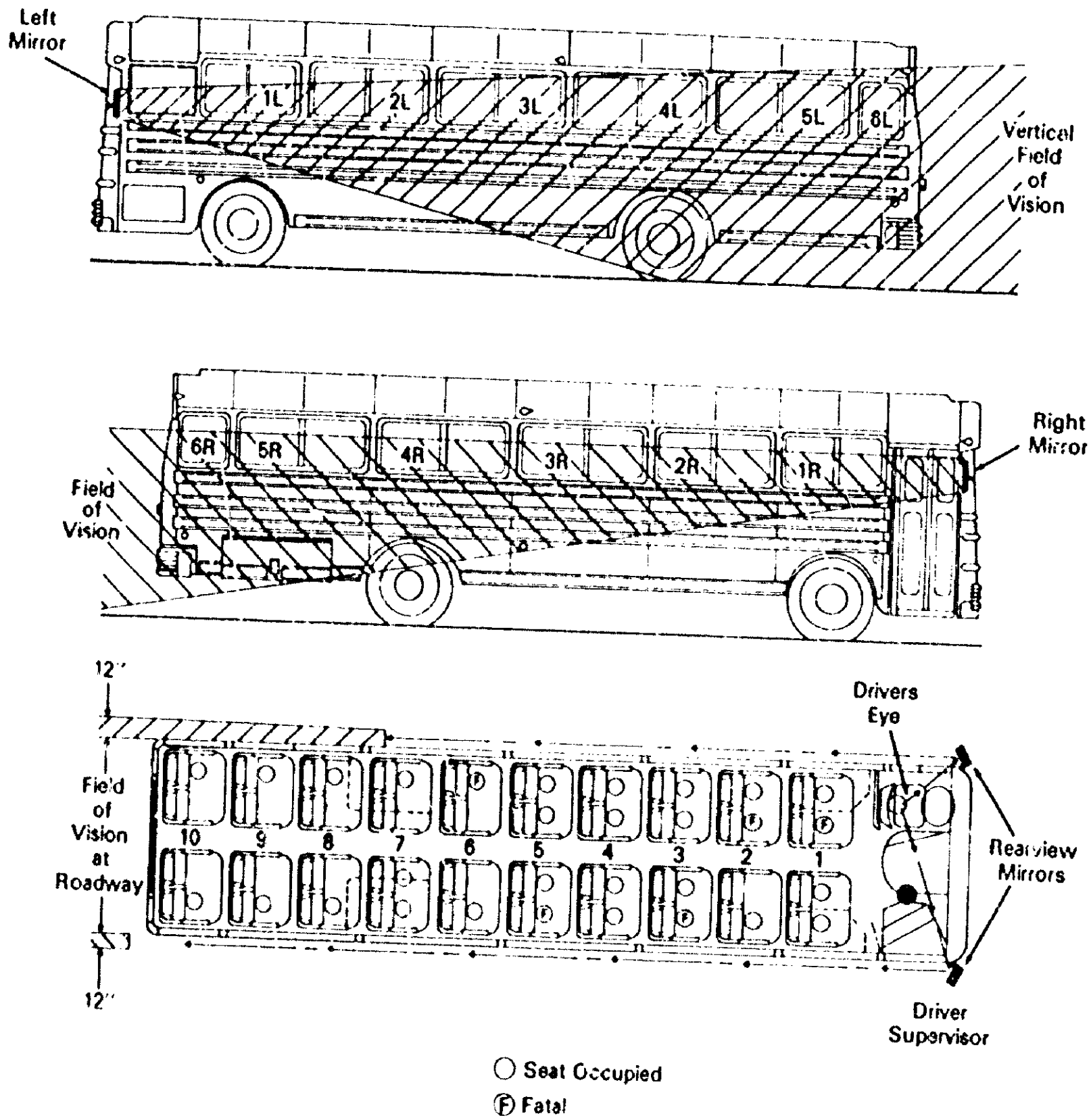

Figure 4.--Rearview vision capability (not to scale) and occupant seating chart.

Figure 5.--Left front of bus.

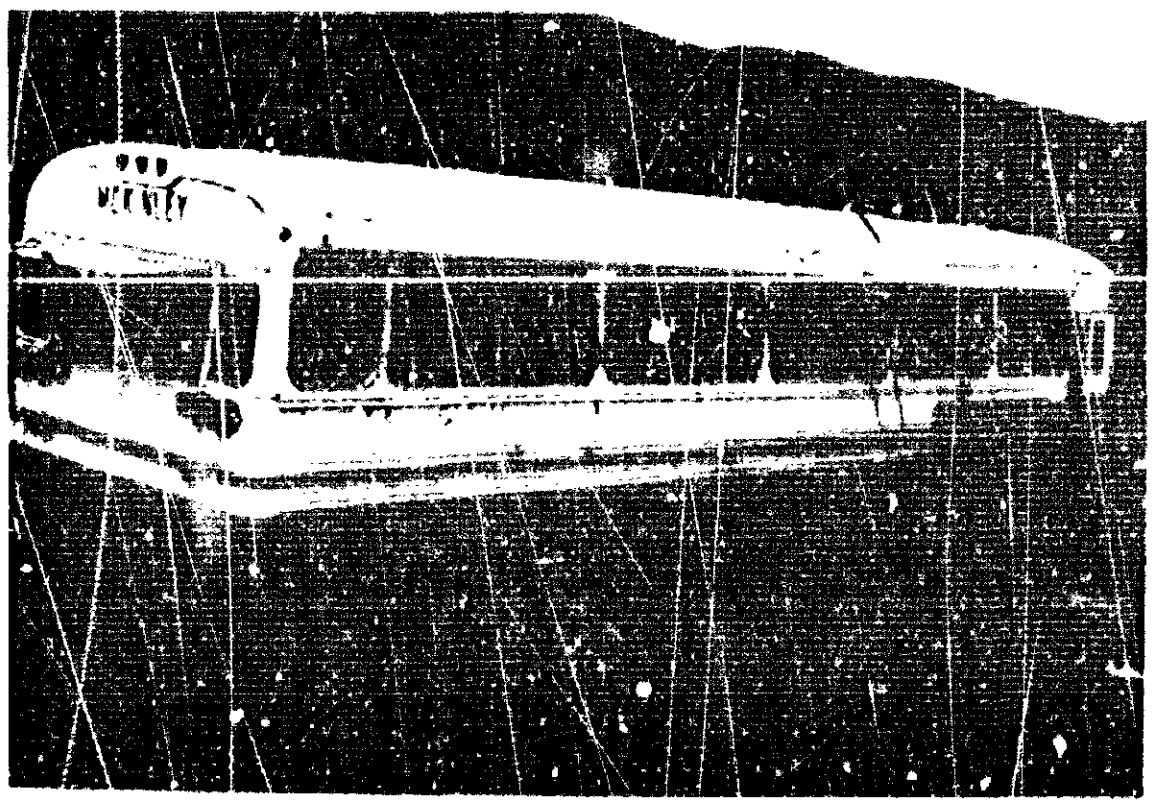

Figure 6.--Right rear of bus.

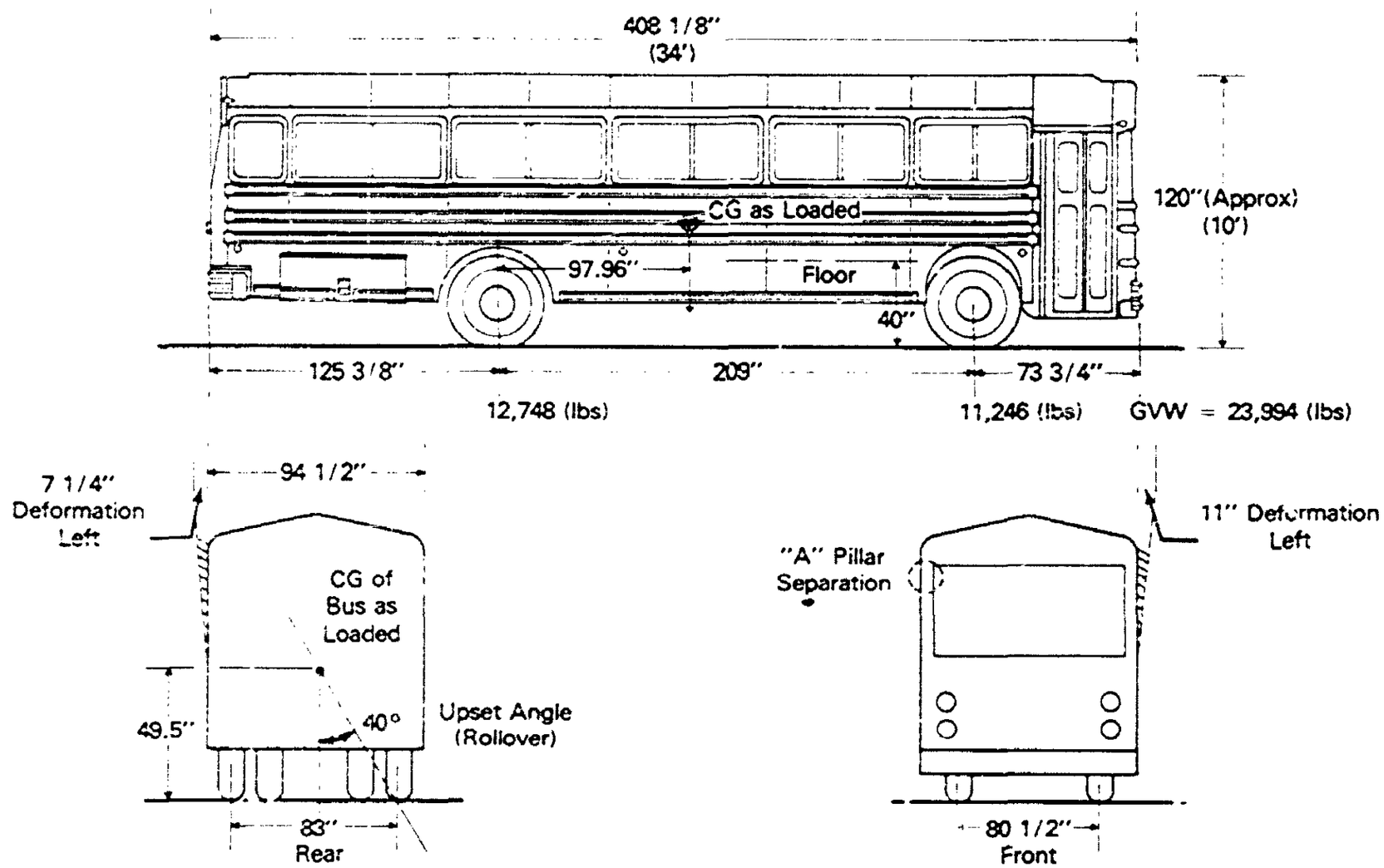

Figure 7.--Basic vehicle information.

Figure 8.--View to front of bus.

1 1/2 months for the Bozeman Montana School District in 1981. He had driven the bus primarily on two-lane rural roads constructed of blacktop and gravel. The school bus contractor with whom he was employed in Bozeman, Montana, stated that the tour bus driver had performed well for them and they had not had any complaints from students or parents during his employment.

The student driver reported for work ~~with~~ Outdoor World, Limited (a subsidiary of ARA Services, Inc.) on June 4, 1981, and received instruction during a 1-day training trip along the Denali Park Road. Between the training trip and the time of the accident, he had worked 5 days around the park headquarters area washing and servicing the buses and driving a bus on short trips with passengers to and from the airport, railroad station, and hotel. During the 2 days before the accident, he had driven his own vehicle to Anchorage and returned (about 480 miles round trip). He stated he was well rested, in good health, was not taking any drugs either prescribed or otherwise, and had not consumed any alcohol during the day of the accident.

The student driver had previously held a South Dakota driver's license, and his driver record showed no traffic violations or accidents. He obtained a Montana chauffeur's license on April 11, 1980. His Montana driver record revealed a violation on April 4, 1980, for driving beyond 90 days with his South Dakota license and a speeding violation on March 6, 1981. The State of Alaska has no driver record for the student driver.

The instructor driver had 4 years of driving experience in the Park.

Meteorological Information

Light rain had been falling during the day but had stopped a short time before the accident. The sky was overcast, and there was no wind. It was daylight and there was no darkness at this time of year.

Roadway Information

Mt. McKinley National Park was established in 1917. The name was changed to Denali National Park and Preserve in late 1980. In 1922, the Alaska Road Commission began work on the Denali Park Road for the National Park Service (NPS).

Denali Park Road, classified by the NPS as a major park road, is 89.41 miles long from Park Headquarters at Alaska State Route 3 to Camp Denali and is open to the public for only the first 13 miles to Savage River. The open section of the road is paved and in generally good condition. Beyond the Savage River Bridge, some sections of the road are unpaved (soil-gravel), rough, and narrow, and several sections have steep grades and sharp curves; a special permit is required for public access to the road. The major access to the western portion of the park via the Denali Park Road is by shuttle or tour bus, although a limited number of private vehicles have been granted camping permits which allow use of the road.

The average daily traffic (ADT) is less than 100 vehicles, about half of which are tour and shuttle buses. The accident occurred in Thorofare Pass on a 13- to 16-foot wide compacted soil and gravel section of Denali Park Road, 1 1/2 miles east of the Eielson Visitor Center and 63.7 miles west of Park Headquarters. (See figure 9.) Regulatory and information signing is present and the posted speed limit is 35 mph. The last sign visible to the driver before the accident site indicates "Soft Shoulders." The roadway at the accident site was irregular in width with measurements from 14 feet 5 inches to 15 feet 10 inches. (See figures 1 and 2.) The main traveled portion of the roadway was firm and in good repair. There were no shoulders and the loose dirt beyond the edge of the road lay in a natural repose noncompacted state. The road was not muddy or slippery from the earlier rain.

At the south side of the roadway, dual tire marks were visible leaving the road edge at a very shallow angle (see figure 1), traveling a short distance off the road edge, and then gouging sideways down the hillside, displacing loose dirt along the side slope. Beyond this point, a single tire mark was visible, nearly parallel with the road edge, extending the same distance as the wheelbase of the bus, and then gouging sideways down the hill. Gouge and scuff marks extended south down the hillside to the point of rest of the bus. At two points along this route, deep gouges the same distances apart as the wheels on the bus were visible. Broken glass, personal effects of occupants, and the occupants were strewn along the travel path.

Responsibility for State highways and the Federal-aid system was assumed by the State of Alaska on July 1, 1960. However, the Statehood Act left exclusive jurisdiction over the national parks and monuments to the Federal government. Maintenance of the park road system has been carried out by the NPS and construction projects have been administered under special agreements by the Federal Highway Administration (FHWA) on behalf of the NPS. No reconstruction in the vicinity of the accident site has been performed on the road since its completion in 1935 by the Alaska Road Commission.

The park's maintenance practices were summarized in a 1975 report 2/ prepared at the request of the U.S. Attorneys Office, Chicago, Illinois, as followup on a tour bus accident that occurred in the Park in 1974. The following is an excerpt from that report:

2/ Report, Engineering Assessment of Roadway Suitability. Site of 1974 Tour Bus Accident, Mt. McKinley National Park, Alaska. Dames and Moore, Consultants of Seattle, Washington and Bomhoff and Associates, Inc. of Anchorage, Alaska.

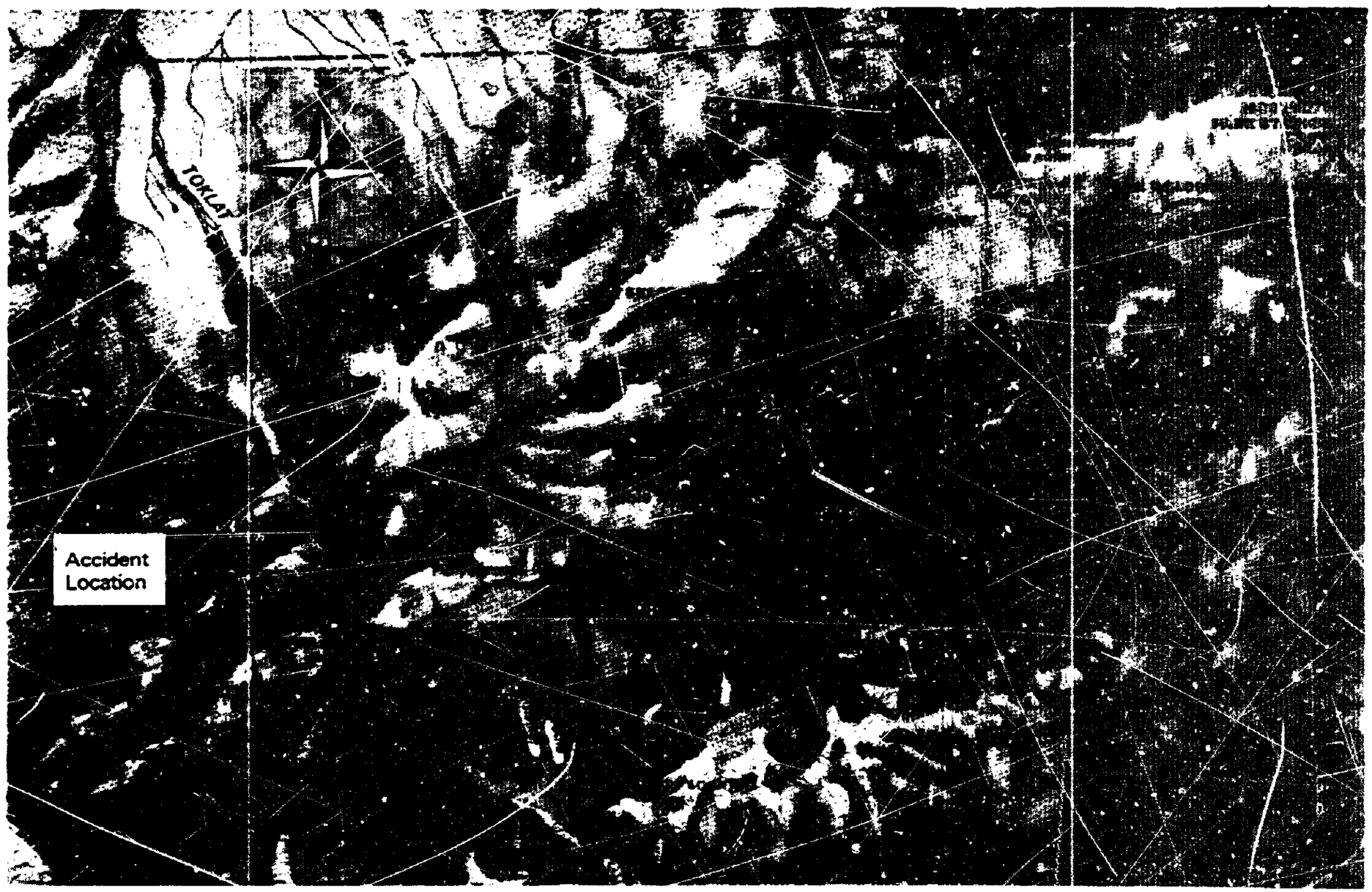

Figure 9.--Denali Park Road and accident site.

> The roadway surface is maintained by the National Park Service. Primary maintenance is accomplished by means of regular grading. Mechanical graders dress the road surface to correct irregularities such as potholes caused by vehicle traffic and the effects of weather. The normal grading procedure consists of finer material being placed on the road surface to fill irregularities and the larger-sized material is pushed over the edge of the road and tumbles to rest on the downhill side slope. The down hill slope is not compacted or stablized in any manner during the grading operation. In fact, the process of dumping oversize material down the embankment would tend to develop a side slope equal to the "angle of repose" or natural rest slope of the embankment material. The material on the surface of such a slope would be marginally stable and not expected to withstand any vehicle traffic.

NPS personnel indicated that there had been no change in maintenance practices at the accident site since the 1975 consultants' report. The accident site had been graded on June 1, 1981. Pot holes are filled by hand maintenance as they develop and are reported to Park Headquarters.

The following excerpts are from the geotechnical, geometric, and roadway features portions of the 1975 report:

> Records establish that the roadway was constructed by a process of phase construction over a period of years. It can be assumed that the present alignment and grade were established more as the result of equipment operation than in accordance with geometric standards. The present roadway width varies considerably at and near the [1974] accident site. The slope of cuts and fills is more the result of the natural angle of repose of the soils than of a planned uniformity.
>
> The alignment, grade, superelevation and embankment slopes were found to be in substantial conformance with established standards for roads 3/with similar capacity and design velocity. The need for guard rail was evaluated on the basis of Alaska Department of Highways design criteria and it was found that guard rail was not warranted for a roadway carrying this low traffic volume.
>
> The width of the roadway through its narrower portions is less than minimums established for new construction by any other public agency known to have road authority in Alaska. However, Park policy does not contain a statement concerning minimum design width, but instead lists maximum widths which are not to be exceeded.
>
> The road was examined for possible defects of design, construction or maintenance. When compared with national and local standards of design, the principal weakness in the roadway is its narrow width. There is no question but what it is significantly narrower than current standards required for new construction outside of the Park.

3/ National Park Service, the American Association of State Highways and Transportation Officials (AASHTO), the Alaska Department of Highways and the U.S. Forest Service.

Based on our investigation of roadway suitability from the standpoint of geotechnical considerations, we can summarize the following conclusions.

1. There is no evidence of failure of the embankment beneath the traveled way of the roadway in the [1974 accident] site area. From the standpoint of embankment stability, the roadway at the site of the [1974] bus accident is capable of supporting the type of vehicle loads to which it is regularly subjected.

2. There is evidence of considerable disturbance of the side slope of the embankment at the point where the bus left the traveled way and traveled parallel to the traveled way before rolling down the embankment [1974]. The downhill side slope of the embankment would not be expected to support vehicle traffic under normal circumstances.

3. The materials in the embankment are judged to be of suitable quality for construction of secondary road embankments.

4. The degree of compaction of the fill in the embankment appeared, based on our site inspection and limited laboratory testing, to be suitable for the intended purpose, although not rigorously conforming to the optional "controlled compaction" specifications of the agencies reviewed.

In 1976, the FHWA entered into a memorandum of agreement with the National Park Service (NPS) to perform a Road Inventory and Inspection Program (RIP) for the NPS covering all national parks. Under the agreement, the FHWA inspected and inventoried maintenance items, such as culverts, signs, and guardrails, and photologged the entire NPS roads system. The introduction to the RIP report for Denali National Park states, in part, that "the RIP provides a planning tool which identifies deficiencies, establishes priorities, and provides preliminary cost estimates for needed construction work. The need is based upon comparisons of existing conditions and standard parameters established by the NPS with FHWA consultation ...RIP reports can be used to identify unsafe sections of roadway and to determine necessary corrective measures.... One of the primary uses of the report is for NPS personnel to justify and/or schedule capital improvement work."

The RIP for Denali National Park indicates that the 25.22-mile section of park road, including the accident site (MP 58.67 to MP 87.34) has an overall sufficiency rating (OSR) of 51.5 and an adjusted (for mountain terrain) OSR of 54.2. A rating of 65 or less indicates a deficiency. According to the rating system, this section of the Park road has, from a safety and service standpoint, a surface width which varies from 2 to 9 feet less than the RIP standard and a shoulder width that does not meet standards.

The Denali Park Road was rated against the RIP width criteria for a major park road. However, the applicable NPS standard 4/ establishes maximum widths as follows:

1. Major two-way park roads should have a pavement not to exceed 22 feet and shoulders not to exceed 3 feet.

4/ Park Road Standards, U.S. Department of the Interior, National Park Service, May 1968.

2. Minor two-way park roads should have a pavement width not to exceed 20 feet with shoulders not to exceed 3 feet.

3. Major, minor, and special-purpose one-way park roads should have a pavement width not to exceed 12 feet with shoulders not to exceed 2 feet.

4. Interpretive (motor nature) roads should have an overall width not in excess of 14 feet.

5. Administrative roads should be of the minimum width necessary to serve the purpose of the road. In no event may they exceed the guidelines for minor park roads.

6. Where guardrails or guideposts are required for reasons of safety, additional feet of shoulder will be permitted.

Medical and Pathological Information

Two passengers died at the scene. One, found under the bus near the right front wheel, suffered crushing injuries to the head and chest area; the autopsy report listed the cause of death as asphyxiation due to breathing passages blockage. The other fatality was found outside the front of the bus and the autopsy report indicated head and chest area crushing injuries. The cause of death was listed as asphyxiation due to hemorrhaging and blood in the air passages.

A third victim died in surgery at the Fairbanks hospital. She had been ejected along the roll route, as were all the fatalities, and had suffered a fractured skull and fractured ribs. Her heart was bruised and she suffered extensive internal bleeding. Two other victims succumbed to injuries while in the hospital.

Survival Aspects

Of the 32 occupants, 5 were killed and 26 were injured. None of the 27 survivors were able to describe their specific movements within the bus except that they were tumbling around as the bus rolled. The student driver was not injured and the instructor driver was injured by the damaged door. Twenty-five passengers were ejected, and the 20 who survived were not able to describe when or through which opening they were ejected, and no one remembered seeing anyone ejected. The student driver, who was wearing a seatbelt, was the only occupant that remained in place. Restraints were not provided for other seating positions. When the bus came to rest on its right side, the student driver, the instructor driver, and five passengers were still in the bus. They had no trouble exiting through the rear emergency escape opening and the windshield opening. Some occupants considered the possibility of fire and moved injured victims away from the bus; however, there was no fire.

Since the student driver stated he did not know what emergency actions to take after the accident, the instructor driver and surviving passengers with minor injuries assisted those who were more seriously injured using first-aid equipment on the bus. Within 5 minutes after the accident, another bus arrived at the scene, and some of its occupants also rendered aid.

Medically trained persons (nurses and emergency medical technicians) in other buses which stopped administered aid, and additional aid was summoned via the radio at Bielson

Visitors Center. A physician at the visitors center went immediately to the scene to supervise the medical aid, and another physician on one of the later arriving buses also assisted.

When officials at Park Headquarters became aware of the accident, about 24 minutes after the accident, they alerted the military search and rescue units in the area and asked for assistance. Helicopters from the Elmendorf Air Force Base, 240 miles south of the accident site, and the Fort Wainwright Army Base, 95 miles northeast of the accident site, and a private airplane from the Park Headquarters, 60 miles east of the accident site, arrived at the scene over the next 2 hours following the accident. The aircraft transported the injured victims to the hospital in Fairbanks, Alaska.

Other Information

The Park concessionaire provides tour bus and shuttle bus services within the Park during the 4 summer months when weather permits. Under the tour bus service contract, the driver provides a narrative of the sights for fee-paying passengers while driving the tour bus. The tour bus concessionaire has the responsibility for training the drivers to a standard specified in concession contract No. 14-10-9-900-57, "Services offered to the public by the concessionaire must be satisfactory as judged by recognized standards for the industry."

Busdriver Training.--Tour busdrivers at Denali National Park are required to have previous bus driving experience because the training received from the consessionaire is not intended to teach driving techniques but is intended to assist drivers in applying their previous experience to the particular problems of the roadway and the area. Drivers are also tutored concerning the flora and fauna of the area and advised in methods of presenting this information to the bus passengers on the tour.

The tour busdriver, referred to as the "Interpreter," wears a headset with a small microphone that permits him to use the public address system in the bus without using his hands. While operating the bus, the busdriver points out the wild animals observed in the area and stops on the roadway to permit the passengers to ask questions, observe, and photograph the animals while he describes the animals and their habits. The tour bus can also be stopped at a passenger's request. The driver constantly divides his attention between driving and informing the passengers.

Since private vehicles are not permitted inside the Park, except the limited number permitted by the NPS to make one trip to and from a designated camping site, the "shuttle bus" service is provided free to park visitors. Shuttle busdrivers travel the same route as the tour bus, taking visitors into the park and picking up and discharging passengers at various points. However, shuttle busdrivers are not required to perform the narrative service and are instructed to keep their eyes and attention on the road and leave sightseeing to the passengers. Although shuttle busdrivers have less duties assigned to them, they are required to participate in more training than the tour busdrivers.

Before being certified, shuttle busdrivers are required to have bus driving experience and to have satisfactorily completed a 40-hour driver training program which includes classroom instruction, a written test, and vehicle operation on a closed course delineated by cone markers. Course routes are marked and drivers are required to become familiar with the dimensions and reference points of the particular buses that will enable them to drive through the various maze patterns without distrubing the cone markers. The training program is explicit and the driver must be able to position the bus properly and accurately on the roadway and recognize when the bus is 2 inches, 6 inches,

or 3 feet from the road edge or curb line. The course is conducted by Outdoor World Limited and supervised by NPS personnel. The concessionaire uses a training manual entitled "The ARA Transportation Group's Behind The Wheel Program" and provides a "Denali National Park and Preserve Bus Drivers Handbook (1981 Edition)" to each driver.

Accident History.--On July 30, 1969, a tour bus en route to Eielson Visitors Center ran off the right side of the road at the 35-mile mark. The driver was not able to control the bus once it was in the loose dirt off the shoulder, and the bus rolled down the steep embankment onto its right side. Nine passengers were hospitalized, and 23 passengers were treated and released. The NPS did not determine the reason for the bus leaving the road.

In 1974, a tour bus carrying 39 passengers was traveling the same road within 1/4 mile of the June 15 accident. The bus ran off the road and rolled 270° and came to rest on its left side. Several passengers were ejected from the bus and five passengers were pinned under the bus. Thirty-two persons were injured, and one person was killed. The NPS accident report indicated that the ejections were a result of windows "popping out" during the rollover and that "seat belts would have minimized the accident."

The following chart summarizing motor vehicle accidents between 1979 and the day of the accident, was derived from the Denali National Park accident records furnished by park personnel.

Denali Park Road Accidents
Per Denali Park Records

	Property Damage		Injury			
Year	Single Vehicle*	Multiple Vehicle	Single Vehicle*	Multiple Vehicle	Total	No. of Accidents West of Savage Check Station
1979	8	6 (1)	1 (1)	1	16	12
1980	8	5 (1)	1	0	14	7
1981	4 (1)	1 (1)	2 (1)	0	7	4

* Most of the single vehicle accidents were "run off the road" accidents. Numbers in parentheses indicate tour or shuttle bus accidents.

Since 1979, six reported accidents, including the June 15 accident, have involved tour and shuttle buses. In 1979, one accident resulted in minor injuries when a shuttle bus developed mechanical failure, and in another accident, a tour bus slid off the road while trying to pass another bus. In 1980, a shuttle bus, in passing a road grader, clipped the grader. Three accidents in 1981 involved Park buses: (1) a tour bus dropped a wheel into a hole in the road, where the road collapsed over a culvert at milepost 17.5. (2) a shuttle bus sideswiped a park vehicle while passing it at milepost 64; and (3) the current accident described in this report.

Road Inventory.--The NPS manages 327 national parks, seashores, battlegrounds, monuments, and other areas of national significance. These areas encompass over 112,000 square miles, and have 7,700 miles of roads, in an area slightly larger than

Colorado. In 1979, over 232 million people visited NPS areas located in 49 States, the District of Columbia, Puerto Rico, and the Virgin Islands. 5/

The NPS Road and Bridge Inventory and Inspection Program 1978-81 Executive Summary and Analysis Preliminary Report, published in April 1981, indicates that the FHWA inventoried 7,700 miles of road and 1,213 bridges, tunnels, and other structures in 228 parks. The summary also states that almost 70 percent of the road mileage is in parks which have a total of less than 20 miles of road, 38 percent of the road mileage is unpaved, natural material, and 31 percent of the overall condition of NPS road mileage is considered in poor condition.

As a result of the study, the FHWA recommended that:

> The NPS should establish a long-term (15-20 years) Roadway and Bridge Improvement Program. Basically, this program should be supported by annual budget outlays to reach desired objectives and goals. The establishment of such a program has several important benefits. First, it formally recognizes the road and bridge deficiency problem. Second, it sets forth a framework for solving the problem, and third, it sets aside the resources in a systematic manner that will enable NPS managers to optimize investments.

In the Denali RIP, there was no accident information. Apparently, the FHWA found this to be a problem nationwide throughout the park system and is in the process of updating the RIPs to include accident information.

On December 1, 1980, the FHWA and the NPS entered into another memorandum of agreement related to the updated stage of the NPS Road Inventory and Inspection Program and Bridges Inspection Program. Under this agreement, among other provisions, the FHWA will develop traffic count guidelines to be used by NPS maintenance personnel in obtaining traffic counts, provision will be made for more comprehensive reporting of traffic accident data by the NPS, and the NPS and the FHWA will work together to develop a reporting system that will provide all pertinent information relative to accidents in NPS areas.

ANALYSIS

Vehicle Condition

The postcrash inspection of the bus revealed that all mechanical systems important to its operational safety were in good to excellent condition. Accordingly, there is no reason to suspect that the vehicle or its condition contributed to the cause of the accident.

Accident Dynamics

The bus was moving east at a very low speed when it left the road since the final resting place of the bus was approximately perpendicular to the point to where it left the road. Any significant forward speed would have caused the bus to move in a more easterly direction during its 2 1/4 turn rollover and significant longitudinal deformation of parts would have occurred. Wheel tracks at the roadway edge indicate the bus left the road at a very shallow angle.

5/ "Facilities in Many National Parks and Forests do not meet Health and Safety Standards." General Accounting Office, October 10, 1980.

The student driver said he attempted to steer to the left to return to the road. The tire track in the loose dirt showed a widening pattern as it proceeded east, verifying the driver's statement. The soil embankment against the inside surface of the right wheel prevented the leftward redirection of the bus and the right front wheel scuffed partially sideways in the loose soil. The wheel maintained a route roughly parallel to the road edge for about the length of the bus and then angled farther down the hillside. At that time, the underside of the bus started scraping the surface of the road and the right rear wheel left the traveled portion of the roadway. Until the right rear wheel left the road, the student driver could have stopped and possibly backed the bus onto the roadway. However, when the soil at the edge of the roadway could no longer support the calculated 6,374-pound right rear wheel load, both the front and the rear right wheels slid sideways at a right angle to the roadway, down the hillside, providing the dropping feeling passengers described as the road collapsing.

The routine maintenance performed on the Denali Park Road provided sufficient compaction for the gravel roadway proper. The natural alluvial fill material that makes up the approximate 1:1 side slope offered resistance to sliding under its own weight but did not have the internal friction necessary to support a 6,374-pound wheel load. The gravel roadway did not collapse under the bus. The noncompacted side slope did give away under the wheel load and permitted the bus to slide until it reached its angle of vertical instability.

Calculations indicate that after the bus rotated past 40°, the center of gravity had shifted to the point where rollover was inevitable. The lateral velocity of the bus in the 2 1/4 turn rollover and its trajectory to its final resting point were a result of the contour of the terrain next to the edge of the road. Physical damage to the bus suggests that the rollover was relatively gentle and deformation to the soil on the hillside indicate that the bus did not become airborne.

Survivability

This accident was survivable. However, the accident highlights the important need to prevent occupant ejection during vehicle rollover, and further supports the Safety Board's belief that the lap belt occupant restraints are a practical deterrent to occupant ejection. 6/ As the bus rolled slowly to the right, the unrestrained occupants tumbled inside the bus. As a result of the impact with the ground and impact from the occupants during the roll action, the windows were either unlatched or broken and separated from the frames. It is possible that one occupant was ejected as the right side of the bus first struck the ground. As the bus continued to roll to the right, an indeterminate number of occupants were ejected. When the right side of the bus struck the ground the second time, some of the right windows were broken, debris was deposited, and possibly other occupants were ejected. When the left side struck the ground during the next roll, the broken and possibly unlatched windows permitted ejection of other occupants and debris along the hillside. As the bus started its last quarter roll, at least one occupant was ejected forward of the bus roll path. Crush injuries to several victims indicated they probably were completely or partially under the bus at some point during their ejection and the bus roll action. Twenty-five of the thirty-two occupants were ejected at some time during the rolling of the bus and many occupants contacted the interior roof area. Had all of the bus occupants been belted, they may have been retained in their seats and would not have been subject to tumbling within the bus. The heads and upper

6/ Highway Accident Report--"Bus Station Wagon Collision Followed By Bus Overturn U.S. Route 66 Near Marshfield, Missouri, October 10, 1971" (NTSB-HAR-73-1).

extremities of the occupants near the windows would have been vulnerable to injury due to their nearness to the ground during rollover sequence, but it is likely that considerably fewer injuries would have been experienced by all occupants. The student driver, who was wearing a seatbelt when the accident occurred, was not injured.

Since 1967, the Safety Board has issued 13 safety recommendations requiring the installation and use of seatbelts in intercity buses and/or schoolbuses. Eight recommendations were addressed to the Bureau of Motor Carrier Safety (BMCS); two to the National Association of Motor Bus Owners (NAMBO) (currently, the American Bus Association); and five to the National Highway Traffic Safety Administration (NHTSA). 7/ Numerous conferences between the Safety Board and the agencies resulted in the following actions:

1. The BMCS modified Federal Motor Carrier Safety Regulation (FMCSR) 393.93 (49 CFR 393.93) to require the installation and use of seatbelts by truck and busdrivers in all vehicles used in interstate commerce.

2. The NHTSA developed and published Federal Motor Vehicle Safety Standard (FMVSS) 217, "Bus Window Retention and Release" and FMVSS 209, "Schoolbus Seating and Crash Protection." NHTSA repeatedly responded that seatbelts in intercity buses and schoolbuses were: (a) not cost effective; (b) a major enforcement problem; and (c) occupant containment could be achieved through seat design (FMVSS 209) and window design (FMVSS 217).

3. The BMCS funded the Research Group of Indiana University to study the feasibility of placing restraint systems in buses engaged in interstate commerce. The study concluded that: (a) voluntary use of seatbelts at all positions on a bus would be about 17 percent; (b) the first two rows of seats (8 seats) are the most hazardous as far as bus accident injuries and fatalities are concerned; and (c) for lap seatbelts in the first two rows of seats to be cost effective, it would require a 47 percent voluntary usage; and (d) an alternate method of passenger protection would be the installation of a crash panel between the driver and passenger compartments.

The tour and shuttle bus service in the Denali Park operation is different from that of intercity bus and schoolbus operations. The passengers are adults, or children under the direct control of their parents. The service is more under the direct control of the busdriver. The alternatives provided by window retention and improved crash protection, as proposed by NHTSA, are in conflict with the need for the large window areas to provide visibility for the occupants of the tour bus since the purpose of their taking the tour is to see as much of the environment as possible. The Safety Board believes that the tour bus passengers should be provided the added personal protection through the installation and use of seatbelts in the tour buses.

In rollover accidents, side windows open and windshield extractions occur as a direct result of cross-sectional bus body distortion. In the transverse direction, a motor bus body is strongest at the roof and floor. The vertical seat back and legs provide additional transverse integrity up to the bottom side window sills. When a bus overturns, dynamic loadings are imposed laterally at the roof edge and the normally rectangular bus cross section is deformed into a parallelogram. Major bending occurs at the side window posts (i.e., the weakest point) and the windows break and/or open. The only solution to the problem is to increase the transverse rigidity of the bus with either extremely stout roll bars, or transverse bulkheads. Smaller windows, or changes in the window locking design,

7/ In some instances, the same recommendation was issued to more than one agency.

will not prevent a window from opening in a rollover environment. Reducing window size small enough to prevent ejection conflicts with the need for a window opening large enough to be a good viewing area and also an emergency escape route. When the bus remains on its wheels after an accident, side window emergency exit capability is of utmost importance to insure postcrash occupant evacuation. The availability and use of individual occupant restraints provides an answer to the problem of occupant ejection and also prevents the occupant from being tumbled within the bus.

Driver Training

Shuttle busdrivers are required to successfully complete a 40-hour training course consisting of classroom instruction, a written test, and actual driving which concentrates on the driver's capability of traversing marked courses without upsetting markers placed along the route. The purpose of the driving is to demonstrate that the driver is aware of the position of all portions of the bus at all times, is able to interpret the driving reference points, and can safely negotiate narrow intricate patterns that may be similar to sections of the roadway that would be traveled later. Since drivers are restricted to about 4 summer months of driving with 8 months of layoff, returning drivers should be required to demonstrate their capability for annual certification.

Shuttle busdrivers have more extensive training but do not have the added responsibility of tour busdrivers who must divide their attention between driving and interpreting the flora and fauna for their passengers. Furthermore, the Safety Board believes that tour busdrivers should be required to take the 40-hour training course now perceived for shuttle busdrivers and be certified annually.

Tour buses in some national parks provide a driver who can concentrate on driving while a second person acts as an interpreter to explain the sights to the passengers. Although the traffic flow on the Denali National Park road is very light, the Safety Board believes that the primitive nature of the road requires the undivided attention of a well-trained driver.

More than half of the reported motor vehicle accidents in the park since 1979 occurred west of the Savage Check Station, a restricted travel area that carries less than half of the Park's traffic volume. Of the six reported bus accidents, four were caused by driver error. The two major bus accidents in 1969 and 1974 and the June 15 accident indicate a need for additional driver training.

This accident may have been prevented if the driver had been trained in being able to recognize certain distances from the road edge and in using practiced reference points, and had utilized the training while driving. Since motor vehicle drivers are seated on the left side, they usually know where the left side of their vehicle is positioned with respect to the roadway centerline or approaching traffic. However, awareness of the vehicle's right side with respect to the edge of the road is difficult. The angular relationship of the driver's line of sight over a point on the engine hood, onto the road surface, provides experienced drivers with an approximate judgment of the relationship of the vehicle's right side to the edge of the road.

Drivers of long wheel-base, blunt nosed (driver in front of steering axle) trucks and buses have special problems. The shorter distance between the driver's eye and the front end components reduces the accuracy of right side location determination. Most large vehicle drivers depend upon rearview mirror observations to confirm the lateral position of their vehicles on the roadway.

Figure 4 illustrates the limited rearview mirror field of vision of the tour buses. Obviously, movement of the driver's head will increase his field of vision. However, even if the driver were to stand up and look into the outside mounted mirrors, the front axle wheels would not be visible in the standard flat rear view mirrors.

The addition of properly adjusted convex mirrors would increase the driver's rearview field of vision to include both vehicle sides and the adjacent road surfaces. Convex mirrors, used in addition to the conventional flat outside mounted mirrors, would provide the tour busdrivers with the ability to relate the bus position with respect to the edge of the road, thereby reducing the possibility of other similar accidents.

The student driver was not able to explain why he drove off the roadway. He said that the bus was operating properly. He denied being distracted by the bus passengers and stated he was not speaking over the public address system at the time. He initially stated he thought he was dividing his attention between the roadway and some caribou at the side of the road. However, when confronted with the instructor driver's statement that the caribou were at least 1/2 mile from the accident scene, the driver became uncertain and stated he was not sure what had happened. Witnesses within the bus also gave different statements pertaining to the position of the caribou relative to the accident scene, but the preponderance of evidence indicates the bus had traveled well beyond the caribou. With no inside or outside distractions for the student driver, the Safety Board concludes that the student driver was not giving adequate attention to the driving task.

Medical Aid

After the accident, the student driver stated he did not know what to do and was not useful at the scene. The instructor driver, however, started first aid action immediately after the accident and had started to organize the less injured passengers to aid the more seriously injured by the time another bus arrived about 5 minutes later. Other buses arrived shortly thereafter with medically trained people on board. Within 30 minutes, each injured person had at least one person rendering care, with one physician circulating among the injured on the ground and another physician checking those who had been carried to another bus. By the time the helicopters with other medical personnel arrived about 2 hours after the accident, all possible field treatment had been accomplished and the victims were ready to be transported. The aid of the bus passengers was invaluable during the interim while park personnel were being summoned to the scene.

Highway Standards

Traditionally, the philosophy of the NPS has been to provide somewhat limited roadway facilities in its parks to avoid impingement upon the environment. This is exemplified by the Park Road Standards, where the various classifications of park roads are defined in terms of maximum width and maximum shoulder width. The NPS Road Standards specify that a major two-way park road should have a surface width not to exceed 22 feet and a shoulder width not to exceed 3 feet. The next lower classification, a minor two-way park road, specifies that the surface width not exceed 20 feet, with 3-foot-wide shoulders. The Denali Park Road is classified by the NPS as a major park road, but the road's width in the area of the accident varied from 13 to 16 feet with no shoulders. Although these dimensions are less than the maximum for this classification, they are also less than the criteria for the next lower classification of a minor two-way park road. Apparently, the NPS Road Standards do not intend that the maximum value for minor two-way roads be the minimum for major two-way roads. Consequently, a 6-foot-wide path meets the classification of the major NPS Road Standard as well as the criteria for the minor NPS Road Standard. The standard does not provide a definitive guide.

Other jurisdictions (the States, AASHTO, and FHWA) define roadway classifications in terms of minimum widths. The Safety Board believes that the NPS should revise the Road Standards to include specified minimum as well as maximum widths of the various classifications of roads.

The FHWA Road Inventory and Needs Study for the Mt. McKinley National Park used a sufficiency rating system which is a nationally accepted method of taking inventory and determining needs for improvement and maintenance of highway systems. The section of park road, including the accident site, has an OSR of 51.5 and an adjusted OSR of 54.2, as opposed to a desirable OSR of 65 or higher. The component sufficiency rating (CSR) for safety and service are also less than adequate. In both categories, surface width and shoulder width were cited as deficient.

The FHWA conducted the inventory and needs study according to the NPS criteria of park road standards. If a part of the public highway system, the park road could be considered a two-lane (two-way) rural road with average daily traffic volumes between 50 and 250 vehicles, and according to the 1965 AASHTO Standards 8/ for a design speed of 30 mph or less, should have a minimum surface width of 20 feet with a minimum useable shoulder width of 4 feet. The Denali Park Road in the area of the accident site failed to meet these standards.

The Denali Park Road from Alaska State Route 3 to the Savage River Bridge (13 miles) is paved and generally meets the criteria of the NPS for a major two-way park road and the AASHTO criteria for a two-lane rural road, but from the Savage River Bridge to Kantishna, including the accident site, the road approximates the NPS criteria for an interpretive (motor nature) road and not a major park road.

The FHWA reported in the recent Road Inventory and Needs Study for Denali National Park that accident records were not available. The Executive Summary summarizing the Road Inventory and Needs Study for the NPS on a national basis indicates that overall there is a lack of accident data. The new memorandum of agreement between FHWA and the NPS indicates this is an area of concern and the NPS and FHWA will work together to develop a reporting system that will provide all pertinent information relative to accidents in NPS areas. The Safety Board encourages this cooperative effort.

The FHWA's Road Inventory and Needs Study for the National Parks, has provided the NPS with a valuable tool. The Safety Board believes that the NPS should follow the recommendations of the FHWA and immediately establish both long- and short-term roadway and bridge improvement programs. The NPS should recognize that it has a road and bridge deficiency problem, set forth a framework for solving the problem, and set aside resources in a systematic manner to enable NPS managers to optimize investments and further the safety of the public using the National Parks.

Most visitors to the Park are dependent on the services offered by the NPS, which include drivers, equipment, road design, and maintenance. The NPS has a responsibility for the visitors' safety, which in the view of the Safety Board, is not being properly fulfilled. To satisfactorily meet the safety needs of the Park visitors, the Safety Board believes that the roadway should be improved to width standards that will permit safe travel, drivers should be trained to meet all driving tasks and emergencies competently, and buses should be equipped with occupant restraints and convex mirrors.

8/ A Policy on Geometric Design of Rural Highways, AASHTO, 1964, pp. 20-21.

CONCLUSIONS

Findings

1. Although ARA Services, Inc., has established an adequate training program for its shuttle busdrivers, it tour busdriver training program is not similarly adequate.

2. The tour busdriver involved in this accident had not received training comparable to that required of shuttle busdrivers.

3. The bus accident history of the Denali Park Road indicates a need for improved training for those who drive buses over the roads within the Park.

4. A driver who had developed skills comparable to those required to be demonstrated in the shuttle busdriver training program relative to positioning a bus on the roadway might have avoided this accident.

5. The student busdriver lacked experience and training in emergency procedures to care for persons injured in the accident.

6. The trained, experienced instructor driver functioned well in organizing the emergency procedure following the accident.

7. The student busdriver failed to apply the attention to the driving task necessary to prevent the bus from leaving the roadway.

8. The mechanical systems important to the safe operation of the bus were in good to excellent condition.

9. Equipping the outside rearview mirrors on the buses with an additional convex mirror configuration would provide drivers additional aid in maintaining the position of the bus on the roadway.

10. The distortion of the bus during rollover contributed to the window glass breakage and release of the window latches.

11. The absence of occupant restraints permitted occupants to be thrown about within the bus and to be ejected from the bus as it rolled, and contributed to the severity of the injuries and to the fatalities.

12. The Denali Park Road from the Savage River Bridge to Kantishna, including the accident site, does not meet the presumptive NPS minimum criteria for a major two-way park road or the criteria for comparable public highways.

13. The signing, geometric properties, and roadway surface of the Denali Park Road did not cause the accident; however, the narrowing of the road may have contributed to the driver's inability to judge the distance from the roadway edge.

14. The compacted soil-gravel roadway did not collapse under the bus. The noncompacted side slops did collapse under the wheel load and permitted the bus to slide until it reached its angle of vertical instability.

15. The NPS motor vehicle accident records system at Denali Park and throughout the National Park Service needs to be improved to provide identification of hazardous areas.

Probable Cause

The National Transportation Safety Board determines that the probable cause of this accident was the failure of the student driver to give adequate attention to the driving task and his misjudgment of his lateral position on the road which resulted in the bus leaving the right edge of the roadway and rolling down the hillside. Contributing to the accident was the driver's lack of training and experience in this tour bus operation. Contributing to the severity of the occupants' injuries and to the fatalities was the lack of occupant restraints which permitted the ejection of most of the occupants.

RECOMMENDATIONS

As a result of this investigation, the National Transportation Safety Board recommends that the National Park Service:

Clarify the National Park Road Standards to specify minimum as well as maximum widths of both roadway and shoulders. (Class II, Priority Action) (H-81-82)

Require the Denali Park concessionaire, who is responsible for the operation of the tour and shuttle bus services, to require that all its drivers successfully complete a busdrivers training program comparable to that now required of shuttle busdrivers and to qualify annually all drivers who transport passengers. (Class II, Priority Action) (H-81-83)

In addition to the flat outside rearview mirrors, require the Park concessionaire, who is responsible for the operation of the tour and shuttle bus services, to equip its buses with convex mirrors on both sides to permit drivers to view the roadway adjacent to the front and rear wheels. (Class II, Priority Action) (H-81-84)

Require the Denali Park concessionaire, who is responsible for the operation of the tour and shuttle bus services, to equip each seating position in each bus with an occupant restraint and to require passengers to wear the restraints. (Class II, Priority Action) (H-81-85)

Conduct detailed surveys of other national parks to determine whether they have road conditions and/or bus service problems similar to those uncovered with respect to Denali Park and take appropriate actions as necessary to correct deficiencies. (Class II, Priority Action) (H-81-86)

Establish both long- and short-term National Park Service roadway and bridge improvement programs to address the road and bridge deficiencies as recommended by the Federal Highway Administration in its April 1981 Executive Summary of the Road and Bridge Inventory and Inspection Program report. (Class II, Priority Action) (H-81-87)

BY THE NATIONAL TRANSPORTATION SAFETY BOARD

/s/ JAMES B. KING
Chairman

/s/ ELWOOD T. DRIVER
Vice Chairman

/s/ G. H. PATRICK BURSLEY
Member

FRANCIS H. McADAMS and PATRICIA A. GOLDMAN, Members, did not participate.

September 29, 1981

*U.S. GOVERNMENT PRINTING OFFICE: 1981-C-361-920/87

APPENDIX

INVESTIGATION AND HRARING

Investigation

The National Transportation Safety Board was notifed by the National Park Service through the Safety Board's Anchorage Field Office on June 16, 1981, at 7:30 a.m. Investigation team members from Washington, D.C. arrived on the scene June 17, 1981, at 3:00 p.m.

Investigative groups were formed for Human/Injury Causative Factors, Highway/Environment Factors, and Vehicle Factors.

Other agencies participating in the investigation included the National Park Service and the Alaska Department of Public Safety.

Depositions Hearings

There were no depositions or hearings held in the investigations.