U.S. DEPARTMENT OF COMMERCE
National Technical Information Service
PB-300 914

Highway Accident Report: Cross-Median, Multiple-Vehicle Collision and Fire, State Route 2, Near Cleveland, Ohio, May 6, 1979

(U.S.) National Transportation Safety Board, Washington, DC

20 Sep 79

TECHNICAL REPORT DOCUMENTATION PAGE

1. Report No. NTSB-HAR-79-7	2. Government Accession No.	3. Recipient's Catalog No. PB300914
4. Title and Subtitle Highway Accident Report — Multiple Vehicle Collision and Fire, State Route 2, Near Cleveland, Ohio, May 6, 1979		5. Report Date September 20, 1979
		6. Performing Organization Code
7. Author(s)		8. Performing Organization Report No.
9. Performing Organization Name and Address National Transportation Safety Board Bureau of Accident Investigation Washington, D.C. 20594		10. Work Unit No. 2742A
		11. Contract or Grant No.
12. Sponsoring Agency Name and Address NATIONAL TRANSPORTATION SAFETY BOARD Washington, D. C. 20594		13. Type of Report and Period Covered Highway Accident Report May 6, 1979
		14. Sponsoring Agency Code
15. Supplementary Notes		

16. Abstract

About 3:05 a.m., May 6, 1979, a 1976 Dodge van eastbound on State Route 2, near E. 305th Street, Willowick, Ohio, crossed the median and collided with a westbound 1971 Ford LTD. The van then proceeded a short distance and collided with a westbound 1976 Oldsmobile. In this collision, gasoline spilled from a ruptured fuel tank and the van and the Oldsmobile were engulfed in flames. Five of the six occupants in the Ford were killed instantly; the sixth occupant died on May 13, 1979. The van driver was ejected from his vehicle and injured seriously; the two occupants of the Oldsmobile escaped with minor injuries.

The National Transportation Safety Board determines that the probable cause of the accident was the loss of control by the driver of the van for unknown reasons. Contributing to the fatal injuries of the occupants of the Ford was their failure to wear the available occupant restraints.

17. Key Words Multiple Vehicle Collision; Automotive Fire, Fuel Tank Ruptures; Loss of Control; Median Strip; Occupant Restraint; Seatbelt; Occupant Crash Protection; MVSS 207, 208, 209, 210; Second Collision; MVSS 301, 302.		18. Distribution Statement This document is available to the public through the National Technical Information Service Springfield, Virginia 22151	
19. Security Classification (of this report) UNCLASSIFIED	20. Security Classification (of this page) UNCLASSIFIED	21. No. of Pages 28	22. Price A03-A01

NTSB Form 1765.2 (Rev. 9/74)

CONTENTS

SYNOPSIS 1

INVESTIGATION 1

The Accident 1
Injuries to Persons 2
Vehicle Information 2
Vehicle Damage 5
Driver Information 7
Highway Information 7
Accident History 8
Medical and Pathological Information 11
Rescue Operations 11
Tests and Research 11

ANALYSIS 11

The Accident 11
Vehicle Integrity 12
The Van Driver 12
Median Barriers 14
Fuel System Integrity 15
Survivability 17

CONCLUSIONS 18

Findings 18
Probable Cause 18

RECOMMENDATIONS 19

APPENDIX A--Vehicle Damage Diagram 21

APPENDIX B--Seated Positions and Injuries in the Ford LTD 24

NATIONAL TRANSPORTATION SAFETY BOARD
WASHINGTON, D. C. 20594

HIGHWAY ACCIDENT REPORT

Adopted: September 20, 1979

CROSS MEDIAN MULTIPLE VEHICLE COLLISION AND FIRE STATE ROUTE 2, NEAR CLEVELAND, OHIO MAY 6, 1979

SYNOPSIS

About 3:05 a.m., May 6, 1979, a 1976 Dodge van eastbound on State Route 2, near E. 305th Street, Willowick, Ohio, crossed the median and collided with a westbound 1971 Ford LTD. The van then proceeded a short distance and collided with a westbound 1976 Oldsmobile. In this collision, gasoline spilled from a ruptured fuel tank and the van and the Oldsmobile were engulfed in flames. Five of the six occupants in the Ford were killed instantly; the sixth occupant died on May 13, 1979. The van driver was ejected from his vehicle and injured seriously; the two occupants of the Oldsmobile escaped with minor injuries.

The National Transportation Safety Board determines that the probable cause of the accident was the loss of control by the driver of the van for unknown reasons. Contributing to the fatal injuries of the occupants of the Ford was their failure to wear the available occupant restraints.

INVESTIGATION

The Accident

About 3:05 a.m. on May 6, 1979, an eastbound 1976 Dodge van was traveling in the fast lane of State Route 2, a six-lane divided highway, when it drifted across the grassy median divider and collided, first, with a westbound 1971 Ford LTD sedan and, then, with a westbound 1976 Oldsmobile Cutlass. (See Figure 1.) The Ford was traveling in the fast lane and the Oldsmobile was traveling in the middle lane. In the collision between the van and the Ford, the front bumper separated from the Ford and became wedged between the rear axle of the van and the pavement. The van then collided with the Oldsmobile. Sometime during the accident dynamics the van driver was ejected onto the side of the road. As the van and Oldsmobile slid to a stop (see Figure 2), the deformed end of the Ford's bumper punctured the van's fuel tank, permitting the gasoline to escape onto the roadway. The two occupants escaped from the Oldsmobile just before the gasoline vapors ignited and engulfed the van and Oldsmobile in fire. None of the six occupants in the Ford survived.

The driver of the Oldsmobile stated that he was driving at 52 mph and was a car length behind the Ford. The Ford appeared to be moving at the same approximate speed. He said that he did not see the van until just before impact and had no time to take evasive action. The passenger in the right front seat of the Oldsmobile said that she saw the van coming across the median and shouted a warning to the driver. Both occupants then lay across the front seat just before the impact.

The traffic on State Route 2 in the vicinity of the accident was light. An eastbound driver who was aware of the van in front of him estimated the van's speed at 50 mph. He saw no erratic driving and said that the van just seemed to drift off the road, bounced as it crossed the median, and struck the Ford almost head on.

The van driver was in a coma for 10 days. When he regained consciousness, his attorney informed the authorities that the driver had no recollection of his activities on the evening of the accident or of the occurrence of the accident.

There was no precipitation or other weather conditions which could have influenced the accident. Visibility was 10 miles.

Injuries to Persons

Injuries	Driver	Passengers	Other
Fatal	1	5	0
Nonfatal	2	1	0
None	0	0	0

Vehicle Information

The Van.— The 1976 Dodge B200 van, VIN B213E6V097531, had been owned by the driver for about 2 years. The odometer registered 47,254 miles. As loaded, the van weighed 3,862 pounds and was equipped with 318 V-8 engine and a two-barrel carburetor, power steering, power brakes, two pedestal-type seats, a center console, a radio, and a tape deck. The tape deck was mounted in the center of the vehicle under the dashboard. The tread width between the left and right wheels measured 64 inches. There were no seatbelts in the van.

The Ford.— The 1971 Ford LTD, 4-door hardtop, VIN 1W64H109665, was owned by the driver. It was powered with a 351 V-8 engine and had power brakes and power steering. The odometer registered 91,503 miles. As loaded, the Ford and its passengers weighed 5,154 pounds. The vehicle was equipped with two seatbelt-shoulder harnesses and a center lapbelt in the front seat and three lapbelt units in the rear seat. The driver's and front seat passenger's shoulder harnesses were tied to the ceiling. There was no evidence that restraints were in use at the time of the accident.

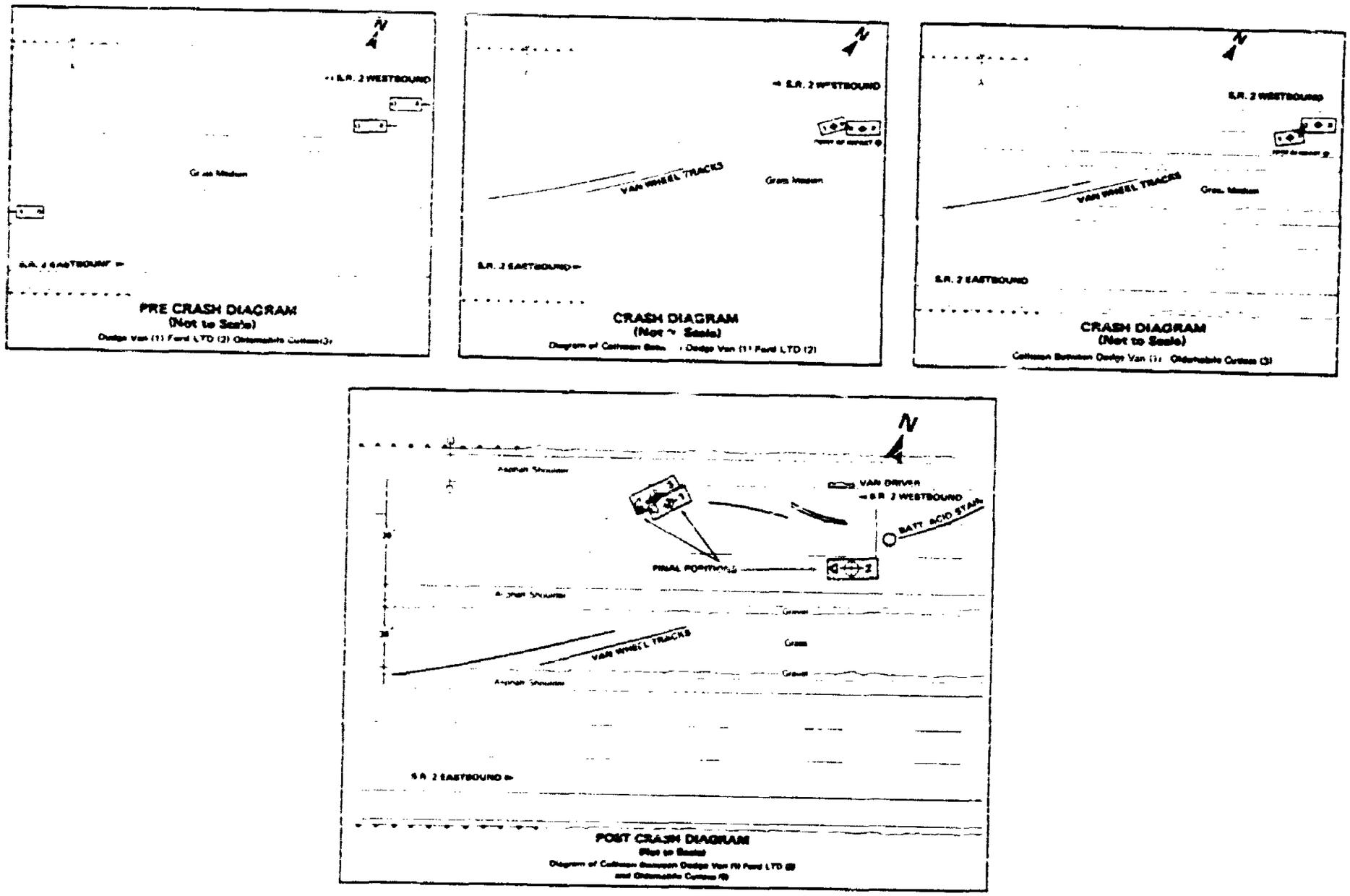

Figure 1.--Accident Diagrams.

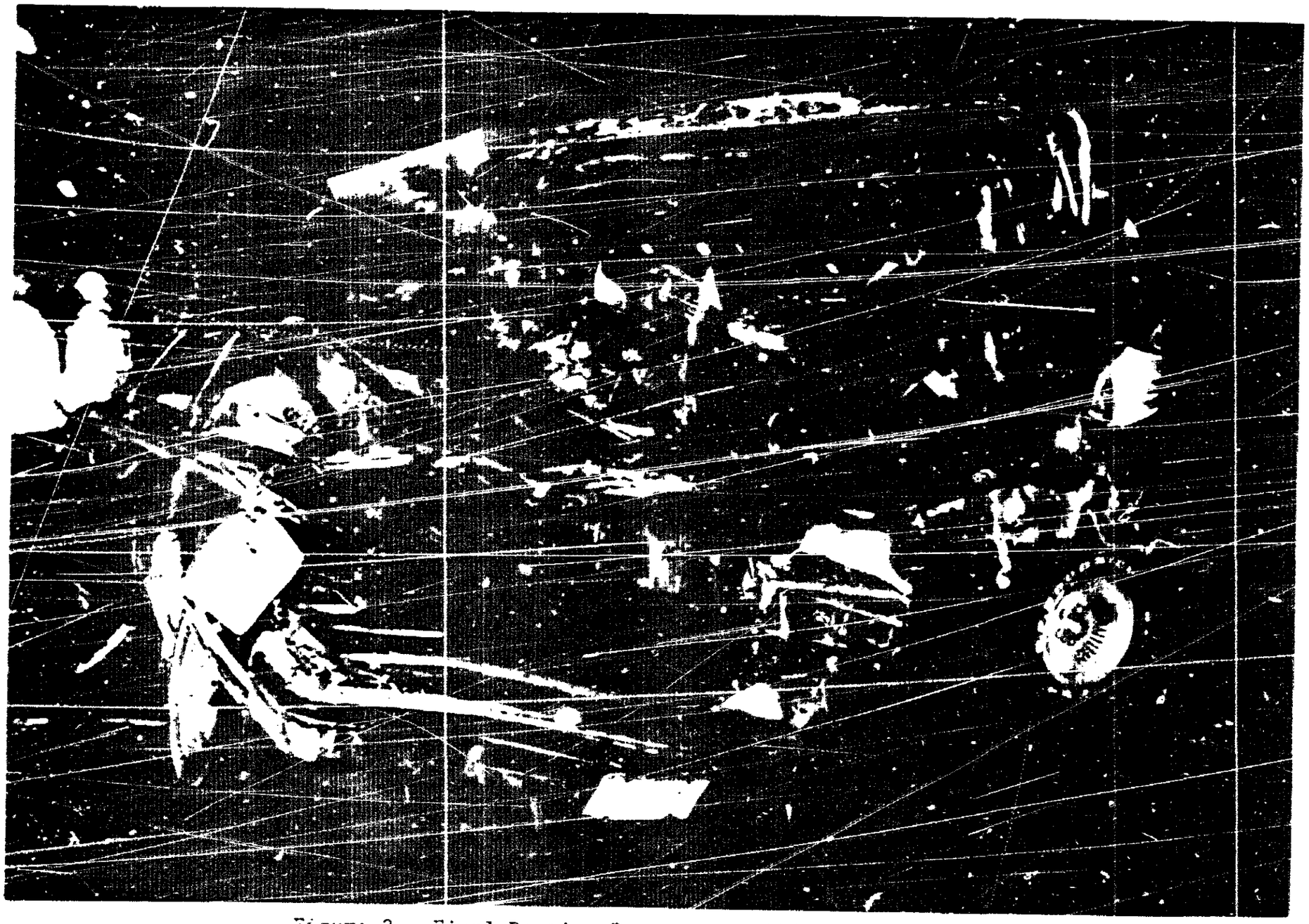

Figure 2.--Final Resting Position of Oldsmobile and Van.

The Oldsmobile.-- The 1976 Oldsmobile Cutlass 2-door sedan, VIN 3J57R6M179836, was owned by the mother of the driver. It was powered with a 350 V-8 engine and had power steering and power brakes. The odometer had been destroyed by fire and the mileage was not legible. Seatbelt-shoulder harness restraints were available to the two occupants in the front seat, but they were not worn.

Vehicle Damage

A postcrash inspection of the three vehicles failed to disclose any mechanical defects that may have been causal or contributory to the occurrence of this accident. (See Appendix A.)

The Van. The postcrash inspection of the van indicated that the front end components were deformed rearward; the most significant deformation was on the right front. All flammable interior and external components were destroyed by fire. The left front tire was cut and deflated, the right side tie rod sleeve was found to be fractured, and the fuel tank had been punctured and was empty.

The windshield was missing. All of the windows were in the closed position.

The driver's seat had been displaced from its floor-mounted pedestal and was found on the floor under the steering wheel. The metal plate which attaches the pedestal tube to the seat frame was bent upward about 1/2 inch at the right seat adjustment track. The seat is supported by a pedestal affixed to the floor. Attached to the metal plate on the bottom of the seat is a 4-inch long trunnion sleeve, which fits over the pedestal fixture and is secured by a clamping device. There was no evidence that the clamping device had been tightened; if the clamp is loose the seat is free to slide off of the pedestal. The passenger's seat, similarly designed, did not separate from its pedestal. The clamping device was tight and held the seat in place. Two holes were found in the bottom surface of the fuel tank. It was necessary to lift up the van to remove the front bumper of the Ford which was lodged under the rear axle.

The Ford.-- All front-end components were deformed rearward and the windshield was missing. At impact with the van, all Ford occupants were propelled forward and upward. The front seat passengers' forward momentum resulted in extremely high impacts on the dash and glove compartment components. The rear seat occupants struck the top and back of the seat back. This impact, combined with the torque arm length (top of seat to the anchorage), distorted the seat adjustment bellcranks on both ends of the seat so that the seat was forced forward and off its floor-mounted seat track. The fuel tank was ruptured, but fuel did not ignite. The front bumper was missing. (See Figure 3.)

The Oldsmobile.-- All front-end components were deformed rearward, the left front fender was deformed inward, and the roof was deformed downward. All interior and exterior nonmetallic materials between the windshield and the rear of the vehicle had been destroyed by fire. (See Figure 4.)

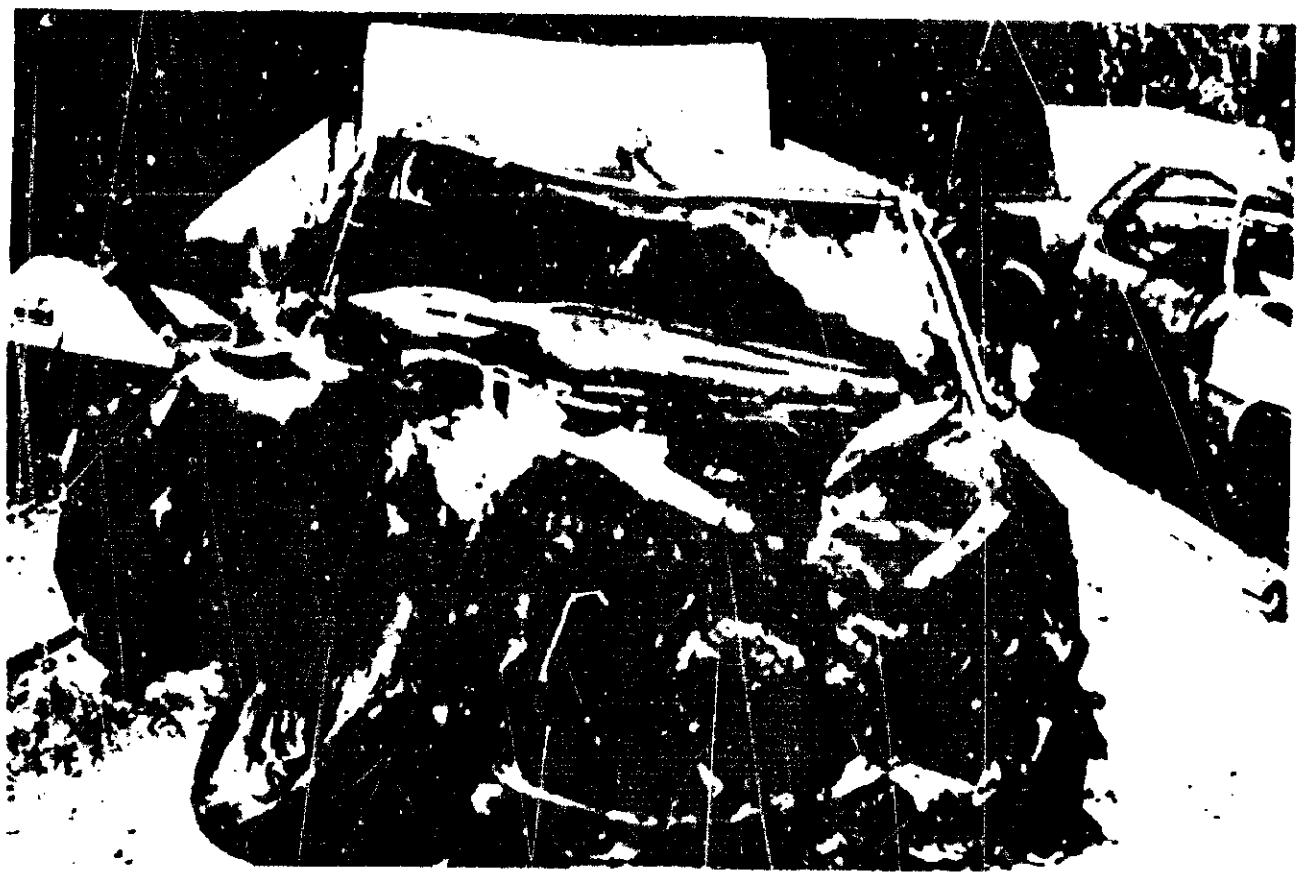

Figure 3.--Frontal view of damage to Ford.

Figure 4.--Frontal view of damage to Oldsmobile.

Driver Information

The van driver, aged 20 years, had a valid Ohio driver license, with no restrictions. His driving record revealed one speeding conviction on March 3, 1979. The van driver spent the evening before the accident in his home with his family and girlfriend. Interviews with these persons disclosed that he had worked on May 5 from 11 a.m. to 7:39 p.m.; he was in good health, had no physical complaints, and was in good spirits the evening before the accident. He had taken his girlfriend home in the early morning of May 6 and when he left about 3:00 a.m., he did not appear to be fatigued or sleepy. The drive to his home was about 10 minutes. He was 5 minutes away from home when the accident occurred.

Highway Information

Ohio State Route 2 in Lake County is an east-west, six-lane divided highway. In the area of the accident, the highway was straight. For westbound traffic there was 0.28-percent upgrade connected by a 400-foot transition curve to another 2-percent upgrade. Impact was at the end of the transition curve near the 2-percent upgrade. The 2-percent upgrade was joined to a 2-percent downgrade by a 1,450-foot transition curve. This area was between the exit and entrance ramp of the E. 305th Street diamond interchange. The westbound exit ramp began about 0.23 mile before the area of impact.

All lanes were 12 feet wide which provided a 36-foot-wide pavement both eastbound and westbound. The median from the edge of the concrete pavement was 36 feet wide. There was no median barrier between the lanes of opposing traffic. Asphalt shoulders were 5 feet wide on the median side and 10 feet wide on the outside edge. Additional gravel shoulders, 3 to 4 feet wide, were adjacent to the asphalt shoulders. About 2 miles east of impact there were only two lanes in each direction with a 60-foot median. Pavement markings included yellow edge lines adjacent to the median and white edge lines on the outside lane next to the shoulder. These were in fair condition. White lane lines were in poor condition and in need of replacement. The asphalt shoulders adjacent to the concrete pavement and construction joints between lanes provided additional guidance.

The middle and outside lanes sloped at a rate of 3/16-inch per foot and peaked adjacent to the left (median) lane, which sloped down toward the median at the same rate. In the median the shoulder sloped downward at a rate of 1/2-inch per foot for about 10 feet and was rounded over the next 10 feet into a 8:1 downward slope for 8 feet. The 8:1 slopes approaching the centerline of the median were rounded to each other over 2 feet.

The road surface was composed of 10 inches of reinforced Portland cement concrete. It was originally constructed in 1960 and had not been resurfaced since. Asphalt had been used to patch locations as needed. There were no significant pavement irregularities. From the concrete surface to the asphalt shoulder, there was a 1-inch drop in the area where the van left the roadway. The posted speed limit was 55 mph.

The accident occurred during darkness. Mercury vapor mast arm street lights provided illumination for westbound traffic, beginning about 1,244 feet before the accident site. These lights are spaced at 235-foot intervals. The same type of lights were provided for eastbound traffic, but at the time of the accident they were not illuminated. A police officer indicated that the nonoperating lights had been reported several times to the official responsible for maintaining them. On May 8, 1979, Safety Board investigators noticed that the eastbound lights were not illuminated between the hours of 10:30 p.m. and 11:30 p.m., but there were no visibility problems and that the contrast between the concrete highway and the asphalt shoulder were sufficient to delineate the edge of the roadway.

There were no preimpact tire or skid marks anywhere in the eastbound left lane or the westbound fast and middle lanes. There were two wheel tracks in the median where the grass was crushed. The wheel track measurements were as follows: Left track -- 117 feet 5 inches; right track -- 104 feet 4 inches; the width between the tracks increased from 58 inches to 62 inches. The tracks left the eastbound left lane at a 9° angle which increased to a 15° angle. They led in the general direction of the point of impact with the Ford. (See Figure 5.)

Accident History

Only about 0.45 mile of State Route 2 is within the boundaries of the city of Willowick. On the west, Willowick is bordered by the city of Wickliffe, which has about 1.77 miles of State Route 2 within its boundaries. On the east, it is bounded by Eastlake, which has about 1.74 miles of State Route 2. Willoughby is adjacent to Eastlake on the east and 5 miles east of Cleveland. (See Figure 6.)

Accident records made available by the officials of the three communities disclosed that from 1969 through 1979, there have been five fatal across-the-median accidents in this 3.96-mile segment of highway, which have resulted in 16 fatalities, 11 injuries, and 15 damaged vehicles.

The State of Ohio Department of Transportation provided four accidents reports on nonfatal, across-the-median accidents. Two occurred in 1976--one in Eastlake and one in Wickliffe; one in 1977 in Willoughby; and one in 1978 in Wickliffe. Computer records indicated that from 1976 to 1978, there were two accidents in Wickliffe, one accident in Willowick, one accident in Eastlake, and seven accidents in Willoughby all involving collisions with fixed objects, but having the potential for across-the-median accidents.

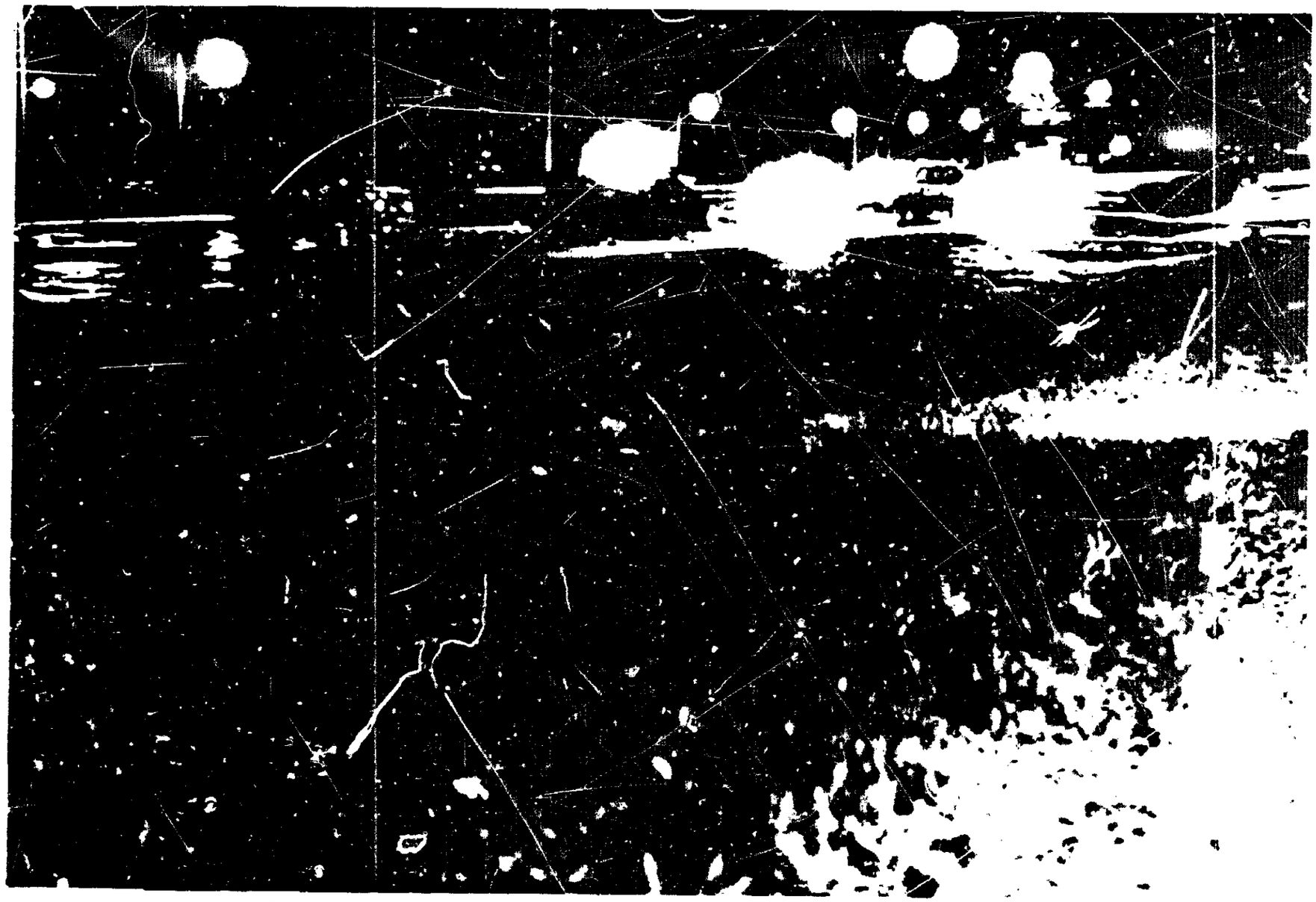

Figure 5.--Northeastern view of wheel tracks in median of State Route 2.

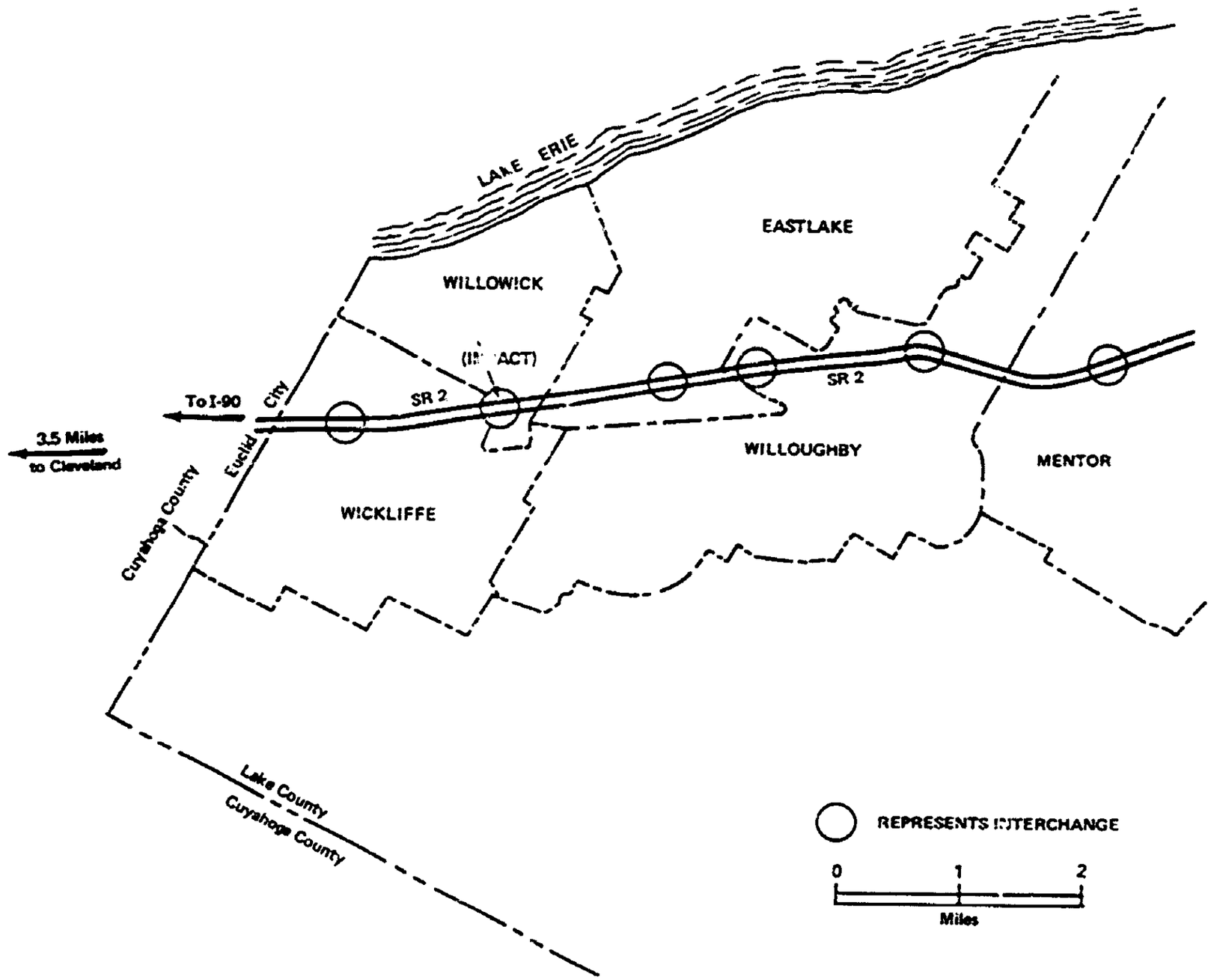

Figure 6.--Map of locale.

Medical and Pathological Information

A blood sample taken from the driver of the van was analyzed by the Regional Forensic Laboratory in Painesville, Ohio. The analyses were negative for ethanol, drugs, and carbon monoxide.

The Coroner, Cuyahoga County, Cleveland, Ohio, conducted autopsies and toxicological analyses on the five immediate fatalities in the Ford. Causes of deaths were listed as blunt impact injuries to the head, face, and trunk and crushing injuries. (See Appendix B.)

Rescue Operations

A resident adjacent to State Route 2 reported the accident and fire to the Willowick police department. Rescue teams and a fire department pumper truck arrived shortly thereafter. Rescue services were prompt and efficient with units responding from Willowick, Wickliffe, and Eastlake. Their immediate attention was directed toward the occupants in the Ford. All doors except the right front were jammed shut and a "jaw of life" entry tool was used to gain access to the one survivor in the left rear of the Ford.

Tests and Research

The van's speed at impact was calculated using the conservation of energy theory and Newton's Third Law.1/ The impact deformation experienced by the van and the Ford was measured and documented. (See Appendix A.) Using these measurements, the speed of the van at impact was calculated at 46 mph.

The fractured right tie rod of the van was examined in the Safety Board's Laboratory. The metallurgical test report stated that the fracture in the tie rod was typical of a gross overload separation. No evidence of progressive failure was found.

ANALYSIS

The Accident

Based on time and distance calculations and witness testimony, the Safety Board concludes that the speed of the van prior to leaving the eastbound lane was about 50 mph. Based on this speed and the location where the van left the roadway, the Safety Board concludes that there were no traffic conflicts that may have caused the van driver to lose control of his vehicle. Additionally, the eastbound witness saw no other vehicles that could have come into conflict with the van.

1/ Robert Resnick and David Halliday, Physics Part I. (New York.) John Wiley and Sons, Inc.) p. 87.

Based on (1) the similarity of the widths between the wheel tracks (58 to 62 inches) and the tread width between the left and right wheels of the van (64 inches); (2) the grass mashed in the direction of the travel of the van; and (3) the direction of the tracks toward the point of the van's impact with the Ford (see Figure 7) between the exit ramp for E. 305th St. and the entrance ramp on to Route 2 from E. 305th St., the Safety Board concludes that the van left the roadway and created the tire marks in the median. The grass in the median was not uprooted or torn up, but was bent forward in the direction of the van's travel. The ground surface, which was soft, showed no evidence of violent disturbance. Therefore, the Safety Board concludes that the van's brakes had not been applied as it crossed the median. The increase in the angle of departure of the wheel tracks could have resulted from the steering input that caused the van to leave the road and the 8:1 slope of the median.

From the time the van left the eastbound lane until impact, the driver of the Ford had no more than 2.5 seconds to perceive the oncoming van and initiate evasive action. Therefore, he did not have sufficient time to do anything to avoid the collision.

Additionally, the driver of the Oldsmobile, which was about 20 feet to the rear of the front of the Ford, had insufficient time to take any evasive action. In this case, the fact that he and the passenger lay across the front seat reduced the severity of their injuries.

Vehicle Integrity

Inspection of the van failed to reveal any mechanical discrepancies that could have contributed to the loss of control or failure of the vehicle to decelerate. The right side tie rod failure was considered as a potential contributor to loss of directional stability. However, the laboratory examination revealed that the tie rod sleeve fracture was a result of excessive overload, probably induced at impact with the Ford. The flat left front tire was also considered. However, examinations of this tire revealed that the air loss was chargeable to an impact-induced sheet metal cut and probably occurred during impact. The likelihood that the primary cause of the accident resulted from mechanical failure is extremely remote.

The Van Driver

The van driver reportedly has no recollection of the accident or the events leading to it. However, we do know that (1) he was not under the influence of alcohol, drugs, or carbon monoxide; (2) he suffered no physical impairment; and (3) he reportedly was in good physical and mental health. In an attempt to explain why the van drifted off of the eastbound left lane, entered and crossed the grass median, made no effort to decelerate or to avoid plainly visible oncoming traffic, and ran into the westbound Ford and Oldsmobile, the Safety Board explored two possibilities:

(1) The driver may have been distracted by tuning the radio or using the tape deck and, thus, allowed the van to gradually change direction. However, as the van ran off the road and dropped 1 inch onto the asphalt shoulder, the slight bump and change in tire noise should have attracted his attention. However, the drop would

Figure 7.--Point of impact (X) between the Van and the Ford in westbound fast lane of State Route 2.

not have hindered his ability to return to the roadway and maintain control of his vehicle. It would seem that the irregular bouncing of the van in the median should have alerted him that his vehicle had left the roadway and prompted him to brake. Therefore, this possibility is regarded as unlikely.

(2) The van driver may have fallen asleep. Normally when a person falls asleep while driving, the body will relax. As the van entered and traversed the rough median and bounced, the unsecured seat could have become detached from its pedestal mount and the unrestrained, relaxed driver could have fallen to the floor or could have been jostled into such a position that he could not regain steering control of the van or apply the brakes.

There was no evidence of an attempt to brake or steer the van in the median. Assuming a constant speed of 50 mph, the van traveled the 174 feet to impact in about 2.4 seconds — hardly enough time for the driver to reorient himself and take evasive action if he had been dislocated from his driving position.

The Safety Board could not determine why the driver lost control of the van and made no effort to stop or slow his vehicle or take some other evasive action.

Median Barriers

Opposing east-west traffic was not separated by a median barrier. The issues raised were: (1) Would a median barrier have contained and redirected the van, significantly reducing the severity of the accident, and (2) do the traffic and environmental conditions justify a median barrier.

State Route 2 through Wickliffe, Willowick, and Eastlake (3.96 miles) had a 36-foot wide median and a daily traffic count (ADT) of 65,760, 63,300, and 47,030, respectively. The American Association of State Highway and Transportation Officials (AASHTO) "Guide for Selecting, Locating, and Designing Traffic Barriers" states: "for median widths greater than 30 feet, the median barrier use is optional. Medians that are wider than 50 feet do not warrant a barrier unless there is an adverse history of across-the-median accidents. It should be noted that after a warranted barrier is installed, accident severity will decrease; however, accident frequency will generally increase since the space available for return to the road maneuvers is decreased."

According to the AASHTO guide, use of a median barrier between the western Lake County line and the eastern Eastlake County line on State Route 2 where the median is 36 feet, is optional. State Route 2 from the eastern Eastlake line where the median is 60 feet wide would not warrant a median barrier unless there is an adverse history of the across-the-median accidents.

A 1964 study by Rodger T. Johnson of the State of California Traffic Department, Effectiveness of Median Barriers, states: "Median barriers are normally installed on freeways and expressways when one or more of the following conditions exist:

1. When the traffic volume exceeds 60,000 vehicles per day.

2. When there is a high rate of across-median accidents. (A rate of 0.46 cross-median accidents involving opposing vehicles per mile per year, or 0.12 fatal across-median accidents per year is considered high.)"

State Route 2 in Wickliffe and Willowick has an ADT in excess of 60,000 vehicles. In 10 years in this 3.96-mile segment (from Wickliffe to Eastlake), there have been five fatal across-the-median accidents which resulted in 16 fatalities, 11 injuries, and 15 damaged vehicles. This is an average of 0.126 fatal across-the-median accident per mile per year. In this same segment of highway there were two across-the-median accidents, one in 1978 and one in 1976, that resulted in one claimed injury but no fatalities. Additionally, there were seven fixed-object accidents computer coded as "On other Roadway (divided highway)" that could have resulted in fatal headon accidents. In the segment of State Route 2 within Willoughby (2.16 miles), the ADT is 54,000 and the median width is 60 feet. In the last 3 years, two across-the-median accidents have occurred, one of which resulted in an injury.

Although a barrier would be termed "optional" by the AASHTO guide, it appears that if a barrier were installed it would save a number of lives as well as reduce the severity of accidents at that location. In addition, a complete engineering study of this segment should be made to determine if a barrier is warranted in the area where the 60-foot median exists.

Fuel System Integrity

At impact, the van's front bumper, overrode the top of the Ford's front bumper. As a result, the Ford's bumper separated from its attachments.

The Safety Board believes that the bottom surface of the van's fuel tank was punctured by the distorted front bumper of the Ford. The shape of the hole in the fuel tank matched the distorted end of the Ford's bumper; the bumper was found under the rear axle differential housing; and the bumper had been discolored by the heat of the fire. Since the fuel tank was located in back of the rear axle, it was protected from other deformed components that conceivably could have caused fuel tank rupture or puncture. The fact that the Ford did not ignite indicated that the van's fuel tank was not punctured until the final stages of the van and Oldsmobile movements. Fuel ignited after the vehicle came to rest. The Oldsmobile occupants smelled the gasoline vapors but had time to leave their vehicle and move to the side of the roadway before ignition.

The fuel spill and ensuing fire demonstrate the potential danger from fuel fires in accidents. Although previous fuel spill accidents investigated by the Board had involved rear-end impacts, this accident was more nearly headon and a component from the other vehicle was dislodged and trapped between the van's rear axle housing and the pavement. These circumstances admittedly were extremely remote, however, they illustrate that fuel tanks do rupture in accidents other than the rear-end type. The Safety Board believes that fuel systems must be designed to maintain their integrity up to some performance level in all accident dynamics.

On January 20, 1971, as a result of its investigation of "Multiple-Vehicle Collisions Under Fog Conditions, Followed by Fires, New Jersey Turnpike, North of Gate 2, November 29, 1969 (HAR-71-3)," the Safety Board recommended that the National Highway Traffic Safety Administration (NHTSA):

"Initiate programs leading to the development of automotive fuel-tank systems which will minimize the escape of fuel in collisions, including the prevention of escape of liquid or vaporous fuel into any compartment of the vehicle. These programs should incorporate revisions to existing test methods and standards to more nearly approximate conditions likely to be encountered in collisions, including rear-end impacts at substantial speed differentials, with the tested vehicle in a braking attitude, and subjecting pertinent components to varying angles of impact, from straight rear-end to 90° right and left. Test standards should consider exposure of the fuel-tank system to fire without loss of structural integrity or the release of vapors into the vehicle or any of its compartments." (H-71-20)

This recommendation was reiterated in the Board's Highway Accident Report—"Airport Police Cruiser-Automobile Collision on Dulles Airport Access Road, Exit No. 1, Near Chantilly, Virginia, April 22, 1971," (HAR-72-1.)

On August 29, 1972, the Safety Board issued the following safety recommendation to NHTSA:

> "Extend its proposed rulemaking on motor vehicle safety standards, relating to the integrity of automobile fuel tanks in vehicle crashes, to include standards for the fuel-retention integrity of all components of the fuel system which are subject to damage and subsequent spillage of fuel." (H-72-19.)

NHTSA has responded to H-71-20 by stating that the recommended action represents a continuation of ongoing action, and to H-72-19 by stating that fuel tank impact resistance is built into current performance standards as amended (FMVSS 301). Neither of these recommendations has been closed by the Board.

Currently, FMVSS 301, Fuel System Integrity, does not provide for tests of rearend collisions with both vehicles in the braking attitude as recommended by the Board. Neither does the standard require testing of rear impacts of more than 30° of angle, whereas the recommendation called for angles from straight rear-end to 90°. The Safety Board believes that 49 CFR 571, S301-T5, Fuel System Integrity, should include definitions of the components of a fuel system. The Standard should also contain performance requirements for each of the included components, so that each component could be evaluated individually to determine if it meets the established performance level. Currently, it is only required that the system not leak.

The Board has noted from the NHTSA "Five-Year Plan for Motor Vehicle Safety and Fuel Economy Rulemaking--Calendar Years 1980-1984," dated April 20, 1979, that FMVSS 301 rulemaking has been placed on a list of "Deferred Rulemaking Activities." However, as a result of some recent serious accidents that resulted in vehicle fires, NHTSA has been testing a number of vehicles in car-to-car, rear-end crashes. In addition, NHTSA is in the process of formally evaluating the current standard with preliminary results expected in the fall of 1979. When these actions are completed, an amendment to the present standard may be proposed.

On June 11, 1979, a U.S. Department of Transportation news release (NHTSA 55-79 (Paris)) indicated that NHTSA is considering possible changes in Federal standards on motor vehicle fuel systems to include performance requirements for nonmetallic fuel tanks. In that release NHTSA issued an Advance Notice of Proposed Rulemaking on the merits of amending Standard No. 301-75, Fuel System Integrity. The ANPRM discusses possible requirements needed to insure the integrity of nonmetallic fuel tanks, such as plastic tanks, particularly when exposed to fire. The advantages of plastic fuel tanks are listed as: (1) Weight saving; (2) elimination of rust problems; (3) flexibility; and (4) impact and puncture resistance. The Board urges NHTSA to expedite this ANPRM with particular emphasis on the resistance to puncture and fire. Since the materials being considered are all susceptible to fire, this factor should receive serious consideration.

The Safety Board is aware of research and development efforts of private industry related to "rubber fuel tanks," and believes that these efforts offer a viable alternative to conventional fuel tank construction.

Survivability

None of the Ford occupants were restrained, and some of the adult occupants may have survived had they been restrained.

Analysis of crash dynamics between the van and the Ford and the tensile strength of the available restraints indicated average impact forces within the Ford of about 31 g's. 2/

The following tabulation indicates the relative weight of each of the six occupants of the Ford, the average g force acting on each of them, and the calculated tensile force which would have been imposed upon each of the seatbelts had they been in use. The 31-g average deceleration rate is based on the extent of vehicle deformation; peak deceleration values are not known, however, their values were probably considerably higher.

Occupant of Ford	Seating Position	Weight (Pounds)	g-Force	Resulting Deceleration Force (Pounds)
1	Driver	198	31	6,138
2	Right front	182	31	5,642
3	Infant R. front	29	31	899
4	Left rear	187	31	5,797
5	Child Center rear	33	31	1,023
6	Right rear	254	31	7,874

Motor Vehicle Safety Standard 209, "Seatbelts Assemblies -- Passenger Cars, Multipurpose Passenger Vehicles, Trucks and Buses" requires, "Assemblies shall be subjected to a tensile force of 6,000 pounds in a manner simulating use." Based on this requirement, the restraints for occupants 1 and 6 would have failed and the restraints for occupants 2 and 4 should have maintained their integrity. Crash

2/ To perform this calculation, a combined closing speed of 98 mph and a combined deformation of 10.58 feet were used.

tests using anthropometric dummies have indicated that adequately restrained occupants can consistently survive headon collisions when the closing speed between two equivalent weight vehicles is about 80 mph. Above that speed, the chances for survival begin to diminish rapidly. Therefore, the Ford occupants had only a limited chance of surviving the collision even if they had been wearing the available restraints. However, failure to use restraints left them with no chance of surviving the collision.

CONCLUSIONS

Findings

1. Examination of all three vehicles revealed no mechanical discrepancy which could have contributed to the accident cause.

2. The front bumper separated from the Ford at impact with the van and became wedged between the van rear axle housing and the pavement surface.

3. The Ford's bumper punctured the bottom surface of the van's fuel tank after the van impacted the Oldsmobile.

4. The failure of the adjustment/anchorage system of the Ford's bench-type front seat resulted from forward impact loading by the rear seat occupants.

5. None of the occupants of the three vehicles were wearing restraint devices. Seatbelts were not installed in the van. The adults in the Ford's right front and left rear seats might have sustained less than fatal injuries had they been wearing restraints.

6. There was no evidence to show that the van driver was impaired or incapacitated due to the effects of alcohol, drugs, carbon monoxide, or preexisting medical disease.

7. There was no evidence that the van driver was fatigued.

8. The actions of the drivers of the Ford and Oldsmobile were not causal to the accident.

9. The van driver was ejected on to the side of the road; therefore, it is impossible to say when and how his injuries were sustained.

10. Future accidents of the same type could be minimized or prevented if a median barrier of appropriate design is installed.

11. In the development of fuel tank integrity standards, testing should be conducted with vehicles in all conceivable impact attitudes.

Probable Cause

The National Transportation Safety Board determines that the cause of the accident was the loss of control by the driver of the van for unknown reasons. Contributing to the fatal injuries to the occupants of the Ford was their failure to wear the available occupant restraints.

RECOMMENDATIONS

As a result of its investigation of this accident, the National Transportation Safety Board made the following recommendations

—to the National Highway Traffic Safety Administration:

"Expedite the development of a Federal Motor Vehicle Safety Standard on motor vehicle fuel systems to include a performance standard for nonmetallic fuel tanks. (Class II, Priority Action) (H-79-41)

"Include a definition of fuel system in the contemplated revision of Federal Motor Vehicle Safety Standard 301-75, Fuel System Integrity. (Class II, Priority Action) (H-79-42)

"Include performance requirements for each of the components of the fuel system, in the contemplated revision of Federal Motor Vehicle Safety Standard 301-75. (Class II, Priority Action) (H-79-43)

"Include requirements for rearend impact test with both vehicles in a braking attitude, in the contemplated revision of Federal Motor Vehicle Safety Standard 301-75, Fuel System Integrity. (Class II, Priority Action) (H-79-44)

"Include the requirement for rearend collision tests at angles from straight rearend to 90°, in the contemplated revision of Federal Motor Vehicle Safety Standard 301-75, Fuel System Integrity. (Class II, Priority Action) (H-79-45)"

—to the State of Ohio:

"Install a median barrier in the 36-foot median segment of State Route 2 within Wickliffe, Willowick, and Eastlake. (Class II, Priority Action) (H-79-46)

"Conduct an engineering study of the 60-foot median segment of Route 2 through Willoughby and install median barriers in those locations where there is an adverse history of across-the-median accidents which would warrant such installations. (Class II, Priority Action) (H-79-47)"

BY THE NATIONAL TRANSPORTATION SAFETY BOARD

/s/ JAMES B. KING
Chairman

/s/ ELWOOD T. DRIVER
Vice Chairman

/s/ FRANCIS H. McADAMS
Member

/s/ PATRICIA A. GOLDMAN
Member

/s/ G.H. PATRICK BURSLEY
Member

September 20, 1979

APPENDIX A

VEHICLE DAMAGE DIAGRAM
1976 OLDSMOBILE CUTLASS (2 DOOR)
VIN 3J57R6M179836

(Not to Scale)

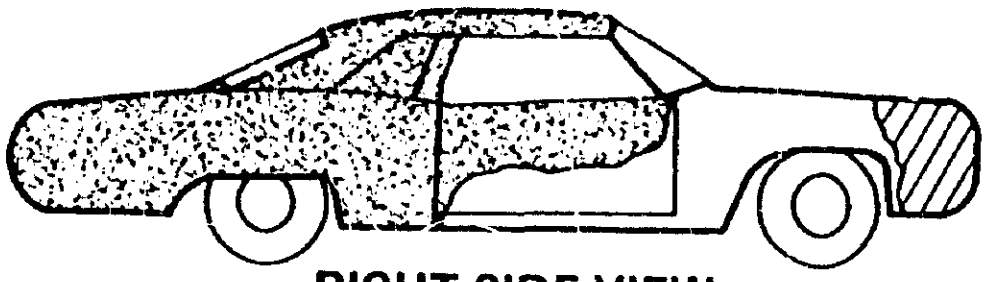

RIGHT SIDE VIEW

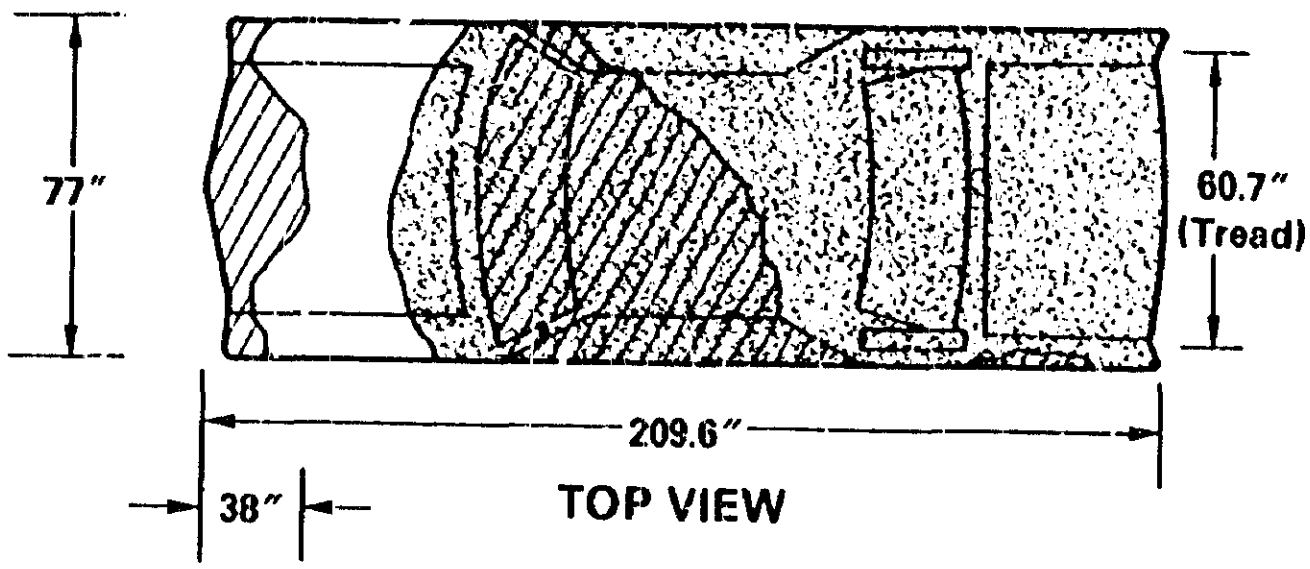

TOP VIEW

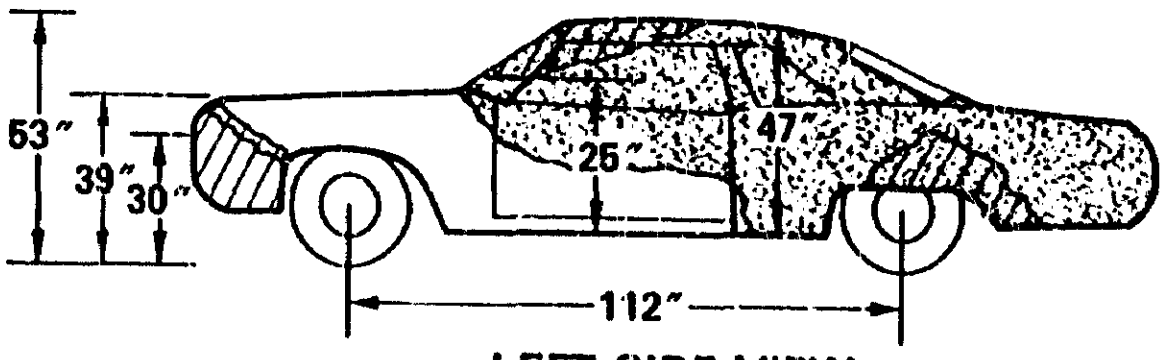

LEFT SIDE VIEW

DEFORMATION DAMAGE

FIRE DAMAGE

(Dimensions in Inches)

APPENDIX A

VEHICLE DAMAGE DIAGRAM
1971 FORD LTD (4 DOORS)
VIN 1W64H109665
(Not to Scale)

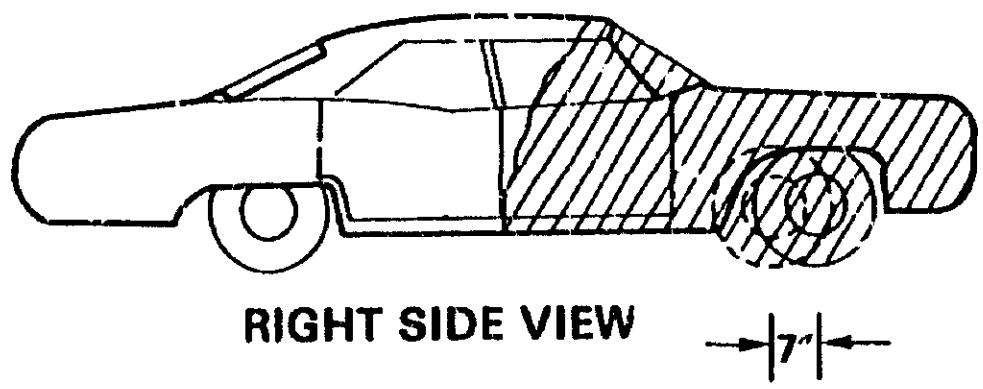

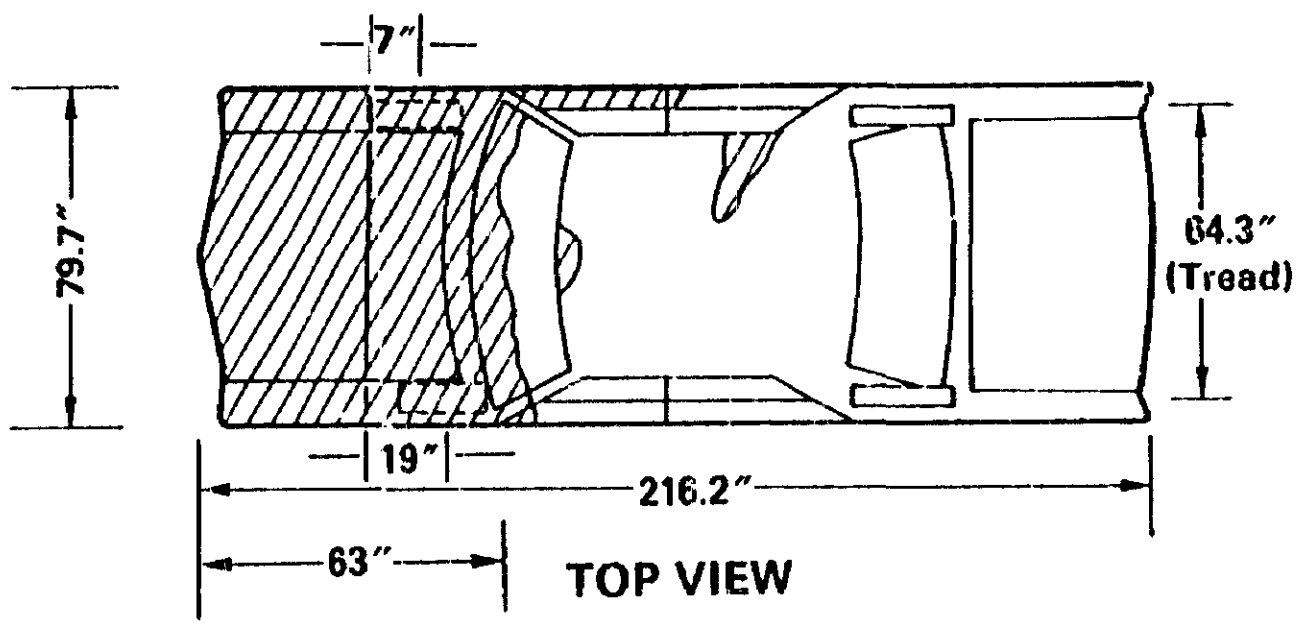

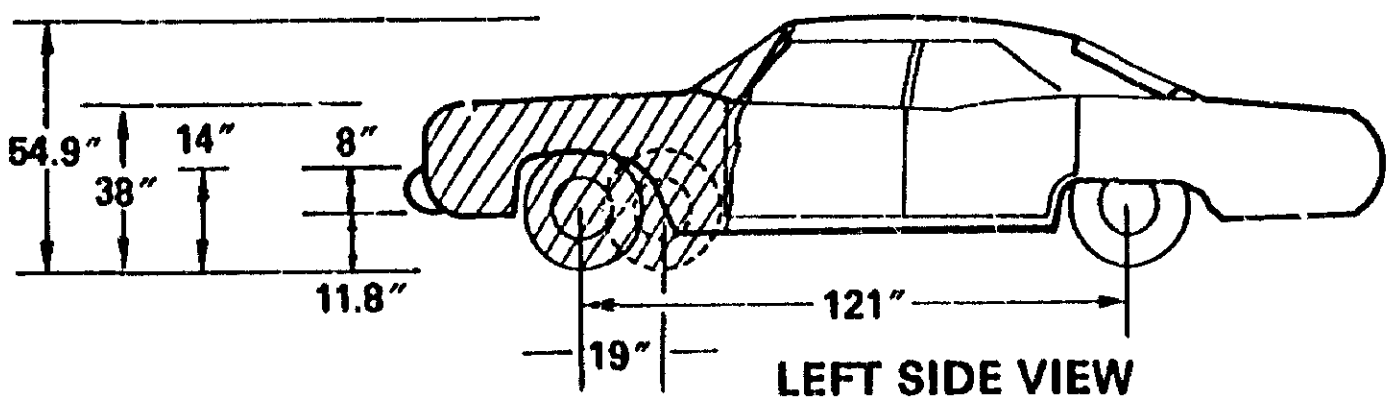

DEFORMATION DAMAGE

(Dimensions in inches)

APPENDIX A

VEHICLE DAMAGE DIAGRAM
1976 DODGE VAN
VIN B21BE6V097531
(Not to Scale)

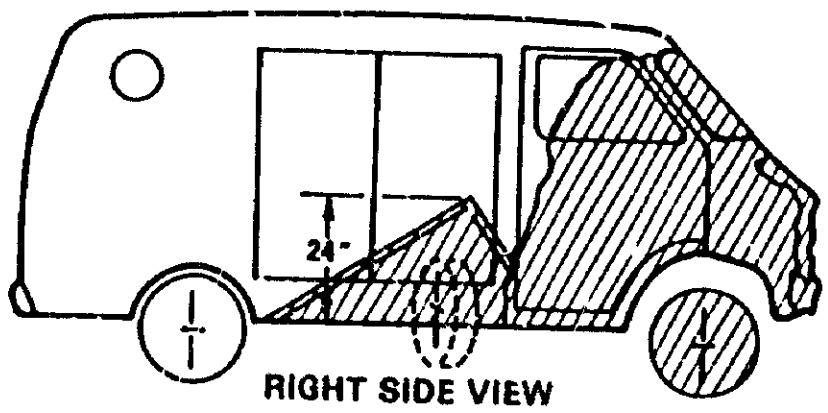

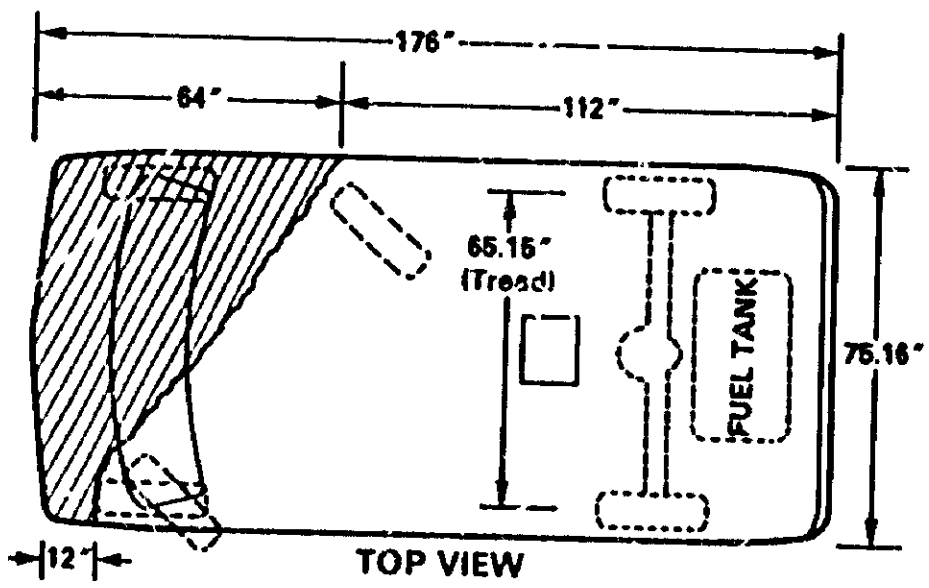

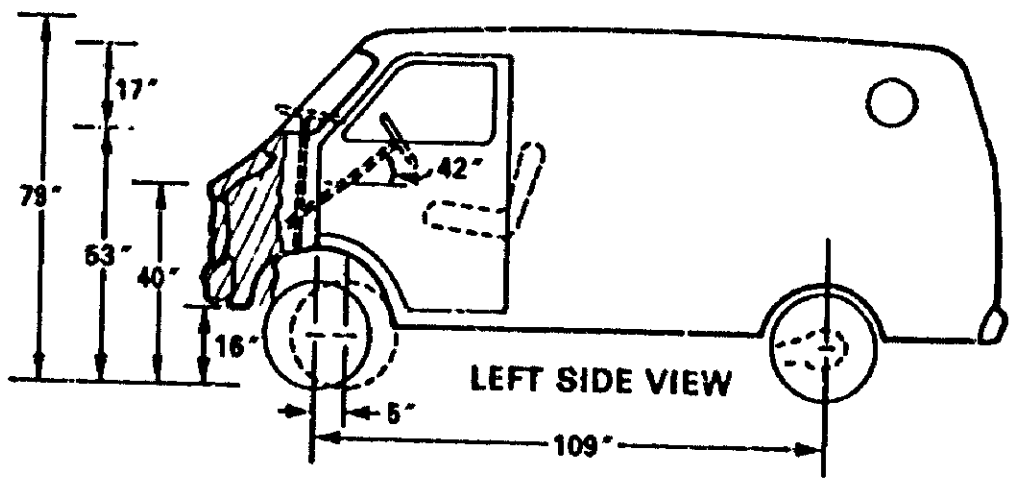

DEFORMATION DAMAGE

(Dimensions in Inches)

Note: Entire vehicle damaged by fire except for lower left side outside components

APPENDIX B
SEATED POSITIONS AND INJURIES IN THE FORD LTD

Seated position and injuries in the Ford LTD. The seating positions, sex, age, height, and cause of death for the occupants of the Ford are listed in the following chart. The causes of death are listed in detail in the Coroner's report.

SEATED POSITION	SEX	AGE	WEIGHT	HEIGHT
(1) Driver	M	22	198	6' 2"
(2) Right front	F	23	182	5' 3"
(3) Right front	F	11 mos.	29	2' 5"
(4) Left rear	F	21	187	5' 2"
(5) Rear	F	3	33	3'
(6) Right rear	F	18	254	5' 8"

CAUSE OF DEATH

(1) Blunt impacts to head, neck, and trunk with multiple fractures and multiple visceral injuries.
(2) Blunt impacts to head and trunk with fractures of cervical spine and multiple visceral injuries.
(3) Blunt impact to chest with lacerations of heart, hemopericardium and bilateral hemothorax.
(4) Bilateral purulent bronchopneumonia due to traumatic asphyxia.
(5) (6) Blunt impact to head, trunk, and extremities and multiple fractures and multiple visceral injuries.