PB2002-916302
NTSB/RAR-02/02

NATIONAL TRANSPORTATION SAFETY BOARD

WASHINGTON, D.C. 20594

RAILROAD ACCIDENT REPORT

Derailment of CSX Transportation Coal Train V986-26 at Bloomington, Maryland, January 30, 2000

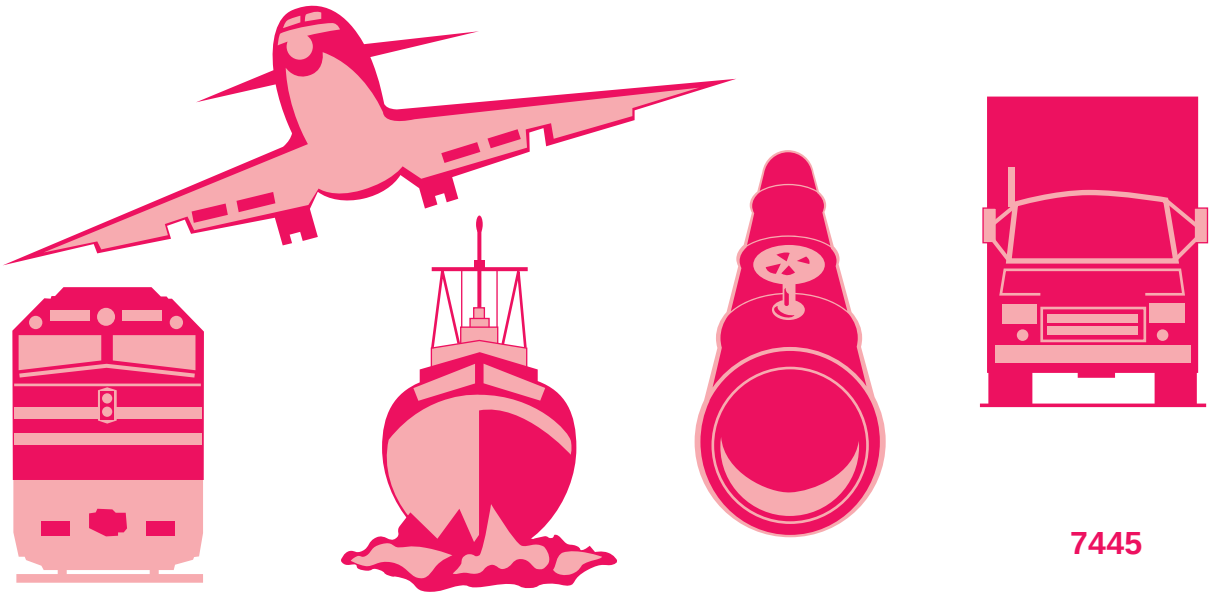

7445

THIS CORRECTION IS *INCLUDED*
IN THIS VERSION OF THE PUBLISHED REPORT:

RAILROAD ACCIDENT REPORT
NTSB/RAR-02/02 (PB2002-916302)

DERAILMENT OF CSX TRANSPORTATION COAL TRAIN V986-26 AT BLOOMINGTON, MARYLAND
January 30, 2000

- Page 24 has been updated with the correct junction name. (12 Aug 2002)
  The name originally printed as Virginia Central Junction.

Railroad Accident Report

Derailment of CSX Transportation Coal Train V986-26 at Bloomington, Maryland, January 30, 2000

NTSB/RAR-02/02
PB2002-916302
Notation 7445
Adopted March 5, 2002

National Transportation Safety Board
490 L'Enfant Plaza, S.W.
Washington, D.C. 20594

National Transportation Safety Board. 2002. *Derailment of CSX Transportation Coal Train V986-26 at Bloomington, Maryland, January 30, 2000.* Railroad Accident Report NTSB/RAR-02/02. Washington, DC.

Abstract: About 7:00 a.m. on January 30, 2000, eastbound loaded CSX Transportation coal train V986-26 lost effective braking while descending a section of track known as "17-mile grade" from Altamont to Bloomington, Maryland, and derailed 76 of its 80 "bathtub" high-side gondola cars when the train failed to negotiate curves at excessive speed. The derailed cars destroyed a nearby occupied residence, killing a 15-year-old boy and seriously injuring his mother. Three other occupants of the residence escaped with little or no injury. Track and equipment damages were estimated to be in excess of $3.2 million. There was no resulting fire or hazardous materials release.

The safety issues addressed in the report include the determination and designation of maximum authorized train speeds with sufficient safety margins to ensure that a train can be stopped by the air brake system alone; locomotive engineer support and training; and engineer knowledge of the condition of the dynamic braking system before and during use.

As a result of its investigation of this accident, the Safety Board makes safety recommendations to CSX Transportation and all class I railroads.

The National Transportation Safety Board is an independent Federal agency dedicated to promoting aviation, railroad, highway, marine, pipeline, and hazardous materials safety. Established in 1967, the agency is mandated by Congress through the Independent Safety Board Act of 1974 to investigate transportation accidents, determine the probable causes of the accidents, issue safety recommendations, study transportation safety issues, and evaluate the safety effectiveness of government agencies involved in transportation. The Safety Board makes public its actions and decisions through accident reports, safety studies, special investigation reports, safety recommendations, and statistical reviews.

Recent publications are available in their entirety on the Web at <http://www.ntsb.gov>. Other information about available publications also may be obtained from the Web site or by contacting:

National Transportation Safety Board
Public Inquiries Section, RE-51
490 L'Enfant Plaza, S.W.
Washington, D.C. 20594
(800) 877-6799 or (202) 314-6551

Safety Board publications may be purchased, by individual copy or by subscription, from the National Technical Information Service. To purchase this publication, order report number **PB2002-916302** from:

National Technical Information Service
5285 Port Royal Road
Springfield, Virginia 22161
(800) 553-6847 or (703) 605-6000

The Independent Safety Board Act, as codified at 49 U.S.C. Section 1154(b), precludes the admission into evidence or use of Board reports related to an incident or accident in a civil action for damages resulting from a matter mentioned in the report.

Contents

Executive Summary iv

Factual Information 1
Accident Synopsis 1
Accident Narrative 2
Train Makeup 2
Train Movement 4
Descent of 17-Mile Grade 6
Damages 10
Injuries 10
Personnel Information 11
Engineer 11
Conductor 12
Trainman Trainee 12
Train Information 12
Train Equipment 12
Track Information 13
Signal Information 14
Operations Information 14
Meteorological Information 14
Toxicological Information 15
Tests and Research 16
Track and Signal Tests 16
Accident Site Inspection of Cars 16
End-of-Train Test 16
Locomotive Tests and Inspections 16
Multiple-Unit Cable 17
Event Recorders 17
Calculation of Braking Horsepower 17
Load Cell Brake Shoe Test 18
Dynamometer Tests 19
Other Information 20
Engineer Training 20
Determination of Maximum Authorized Speeds and Braking Capability 23
CSXT Postaccident Actions 24

Analysis 25
Exclusions 25
Weather 25
Fatigue 25
Toxicology 25
Track and Signals 26
Event Recorder 26
Air Brake System 26
Dynamic Braking and Train Speed 27

Tread Brakes/Air Brakes and Stopping Ability 29
CSXT Management Oversight 31
Engineer's Actions 31
Engineer's Support and Training 33
Use of End-of-Train Emergency Switch 34
Emergency Radio Use 34

Conclusions 36
Findings 36
Probable Cause 36

Recommendations 37

Appendixes
A: Investigation 39
B: How Freight Train Air Brakes Work 41

Executive Summary

About 7:00 a.m. on January 30, 2000, eastbound loaded CSX Transportation (CSXT) coal train V986-26 lost effective braking while descending a section of track known as "17-mile grade" from Altamont to Bloomington, Maryland, and derailed 76 of its 80 "bathtub" high-side gondola cars when the train failed to negotiate curves at excessive speed. The derailed cars destroyed a nearby occupied residence, killing a 15-year-old boy and seriously injuring his mother. Three other occupants of the residence escaped with little or no injury. Track and equipment damages were estimated to be in excess of $3.2 million. There was no resulting fire or hazardous materials release.

The National Transportation Safety Board determines that the probable cause of the January 30, 2000, derailment of CSX Transportation train V986-26 near Bloomington, Maryland, was the railroad's practice of including dynamic braking in determining maximum authorized speed without providing the engineer with real-time information on the status of the dynamic braking system.

The safety issues addressed in the report include:

- The determination and designation of maximum authorized train speeds with sufficient safety margins to ensure that a train can be stopped by the air brake system alone.
- Locomotive engineer support and training.
- Engineer knowledge of the condition of the dynamic braking system before and during use.

As a result of its investigation of this accident, the Safety Board makes safety recommendations to CSX Transportation and all class I railroads.

this page intentionally left blank

Factual Information

Accident Synopsis

About 7:00 a.m. on January 30, 2000, eastbound loaded CSX Transportation (CSXT) coal train V986-26 lost effective braking while descending a section of track known as "17-mile grade"[1] from Altamont to Bloomington, Maryland, (figure 1) and derailed 76 of its 80 "bathtub"[2] high-side gondola cars when the train failed to negotiate curves at excessive speed. The derailed cars destroyed a nearby occupied residence, killing a 15-year-old boy and seriously injuring his mother. Three other occupants of the residence escaped with little or no injury. Track and equipment damages were estimated to be in excess of $3.2 million. There was no resulting fire or hazardous materials release.

Figure 1. Accident location.

[1] *Grade* is defined as the change in elevation along the track. It is expressed in percentage representing the change in vertical elevation, in feet, over a distance of 100 feet. For example, a change in elevation of 1 foot over a distance of 100 feet would represent at 1-percent grade. *Mountain*, *heavy*, or *steep* grade for a train of 4,000 trailing tons or less is a grade of 2 percent or more for a distance of 2 or more miles. For a train with a trailing tonnage of more than 4,000 tons, steep grade is an average of 1 percent or more grade for 3 or more miles.

[2] Unlike hopper cars, these cars do not have bottom outlets and must be unloaded in a rotary dump cradle.

Accident Narrative[3]

Train Makeup

CSXT train V986-26 originated at the CSXT Grafton Yard in Grafton, West Virginia, and was destined for the Potomac Electric Power Company's Bennings power plant in Washington, D.C. The 80 loaded coal cars of the accident train originated at the Sentinel (coal) Mine, which is about 13 miles from Grafton on the CSXT Cowen Subdivision.

On January 28, 2000, a CSXT train crew put together the two previously assembled blocks of 40 loaded coal cars that would become the accident train using a two-locomotive consist. After the initial terminal air brake tests and equipment inspection, the train departed the mine. At that time, the train's brake pipe[4] air pressure was set for 90 pounds per square inch (psi), and according to the crew, the end-of-train device (EOT)[5] was showing a train line pressure of 88 1/2 psi at the rear of the train. (See appendix B for more detailed information on the operation of freight train air brakes.) According to the mine train crew, the movement from the mine to Grafton Yard was routine and without incident.

When the train reached Grafton Yard, it was moved to the East Yard No. 3 track. The locomotives were removed, and the train line was connected to an 80-psi yard air supply to maintain brake pipe pressure.

About 11:30 p.m. on January 29, a yard crew at Grafton Yard, under the direction of the dispatcher, assembled the three-locomotive consist of the accident train,[6] with a former Conrail locomotive as the lead unit. (See figure 2.) Once the locomotive units were coupled together on the eastbound track, the yard crewmembers connected the locomotives' air hoses and multiple-unit cables,[7] and performed an air test. They then coupled the locomotive consist to the 80 loaded coal cars on No. 3 track that would make up train V986-26. According to the CSXT Locomotive and Train Air Brake Test Certificate signed by the yard crew engineer, a locomotive brake test was completed at 12:01 a.m., January 30. A successful set-and-release train brake test was also performed.

[3] The following narrative is based on witness interviews as corroborated by CSXT records, official documents, and train event recorder data.

[4] Commonly called a "train line," the *brake pipe* is the pipe, hose, connections, angle cocks, cut-out cocks, fittings, etc., connecting the locomotive and all cars from one end of the train to the other for the passage of air to charge and control the brakes.

[5] An EOT transmits to the lead unit (head-end locomotive) the brake pipe pressure at the rear of the train. Brake pipe pressure can also be seen on a digital readout on the flashing rear-end device itself.

[6] The number of locomotive units assigned to eastbound coal trains had recently been increased from two to three to preclude delays due to insufficient power.

[7] The *multiple-unit cable* electronically connects coupled individual locomotive units, enabling them to be controlled from one cab as one locomotive.

Figure 2. Accident locomotive consist.

After the locomotives were attached to the accident train, a utility employee[8] removed the yard air. The yard crewmembers were instructed to move the accident train down track No. 3 to the scale house, where they secured the train and were relieved.

The accident train crewmembers (an engineer, a conductor, and a trainman trainee) arrived at Grafton about 2 hours later, at 2:00 a.m. on January 30. After receiving their orders and conducting a job briefing, the accident train crewmembers went to the train. The utility employee helped the accident engineer test the air brakes, as required by the Federal Railroad Administration (FRA). The train line pressure was set for 90 psi, and according to both the engineer and the utility employee, the EOT indicated a pressure of 81 psi at the rear of the train.[9] The engineer and the utility employee also successfully tested the EOT emergency brake application feature.[10] The crew then checked that the locomotive hand brakes were off and that the control console of each trailing locomotive unit was set up in the proper configuration. About 2:30 a.m., the train, upon receiving the signal from the dispatcher, departed Grafton Yard.

[8] The *utility employee* performs several jobs in the yard, combining functions of a brakeman, a switchman, and a carman.

[9] That the flashing rear-end device showed a brake pipe pressure of 81 pounds was later verified by the event recorder, which recorded both the head-end and rear-end train line pressures.

[10] This was a two-way EOT, which gives the engineer the capability to remotely initiate an emergency brake application (by immediately releasing all air pressure from the train line) from the rear end of the train, either to get a quicker application or because a train line blockage is preventing the propagation of an application from the locomotive.

The utility employee said that he observed the last 30 to 35 cars of the train as it departed and that he noted no problems. He also said that he saw no snow or ice around the brake shoes or trucks.

Train Movement

When the train reached Newburg at milepost (MP) 267.2, it stopped so a helper[11] could be added. The engineer said that up to that point, he had not needed to use either the air brakes or the dynamic brakes[12] to control the train.

When the helper arrived and was coupled onto the rear of the coal train, the helper flagman (brakeman) disconnected the train line from the coal train EOT and connected it to the helper.[13] The helper engineer told the train engineer that there were 82 pounds of pressure and asked him to do a set-and-release brake test. After successful completion of the test, the train proceeded east with a clear signal. From then on, except at Blaser (MP 258.9), until the helper was uncoupled at Terra Alta, the train engineer did not communicate with the helper engineer except to call signals.

When the train reached the top of the hill at Blaser, the helper engineer radioed the train crew that the air on the rear of the train was adequate to go down the hill. The train proceeded down the hill at the authorized speed of 25 mph; however, the helper engineer thought something was unusual:

> I think we used 17 pounds of air[14] coming down the first hill. Which was kind of [unusual]…. Generally, 10 to 11 [pounds of] air will hold a train off there…. But [the coal train engineer] controlled the train at the speed limit….

The helper engineer said later that he did not say anything to the train engineer about the heavier air brake application, even though he thought it was unusual, because the train was under control and not exceeding the authorized speed.

The train reached the bottom of the grade at Rowlesburg and began the uphill climb to Terra Alta. The train reached the top of the grade at Terra Alta without difficulty, where it stopped to cut off the helper.

---

[11] The *helper* was a two-unit locomotive placed on the rear of the train to help push the coal train up the grade to Altamont.

[12] *Dynamic braking* is a method of train braking in which the locomotive's traction motors are converted to electric generators driven by kinetic energy from the moving train. The generated electricity flows into a resistor grid on the locomotive and is dissipated as heat. This electrical "load" on the traction motor/generator acts to slow the motor shaft rotation, resulting in a braking action being applied to the train wheels. Dynamic braking on the locomotives is completely independent of the air braking system on the cars themselves.

[13] This type of two-way EOT can remain in the coupler when another car or locomotive is coupled to it.

[14] Meaning that the train line pressure was reduced by 17 psi. Brake application is modulated by the amount of air pressure reduction. In an emergency brake application, the air pressure is quickly reduced to zero.

As the train draped the crest of the grade at Terra Alta, the helper was uncoupled. The helper brakeman reconnected the flashing EOT to the train line, but the EOT would not register train line pressure. The helper brakeman replaced the EOT with a spare unit carried aboard the helper, and he and the train engineer were then able to establish telemetry and successfully performed an air test and an EOT emergency feature test. About 5:43 a.m., the train continued east, and the helper returned to Rowlesburg.

The portion of railroad from Terra Alta to Altamont was undulating over 18.6 miles, and the maximum authorized speed for coal trains was 30 mph.[15] The eastbound route had a brief down grade, from Terra Alta to Snowy Creek, during which the engineer maintained a speed of 28 to 29 mph by using dynamic braking and a short and limited application of the air brakes.[16] The engineer then went to full throttle (throttle control in the 8th notch) and ascended the grade to Edgewood, east of the Maryland State line. Then he descended the shallow down grade to Skipnish Fill, while he again made a short, 1-minute, minimum 8-pound application of the air brakes, supplemented by dynamic braking. (The engineer was unaware that the lead locomotive was the only unit on which dynamic braking was actually being applied because of a defective multiple-unit cable connecting the lead locomotive with the first trailing unit.) After that, the grade dropped off rather sharply down into the Youghcogheny River Valley through Macking's Hollow, just west of Oakland, Maryland. The engineer used a brief minimum brake application of 10 pounds for about a minute and a half while continuously using heavy dynamic braking. The railroad was relatively level through Oakland and then gently ascended to Mountain Lake Park, where the grade increased and the railroad climbed up through Deer Park, Maryland, about 2.8 miles from the grade at Altamont.

When the train reached Oakland, the engineer came out of dynamic braking and increased the throttle, eventually accelerating to 40 mph in order to build enough momentum to ascend to Altamont. He maintained maximum throttle (notch 8) on the climb to Altamont, but the speed slowly dropped to 15 mph as the lead locomotive unit crossed the summit, about 6:22 a.m. About a minute later, the speed dropped to 13 mph, and the engineer made a minimum brake application while in throttle notch 7. He proceeded to drag the train over the crest of the Altamont summit[17] while progressively reducing the throttle as more of the train crested and began the descent. During this time, the train's speed dropped to 9 mph and then climbed to 13 mph.

Descent of 17-Mile Grade

As it began its descent at Altamont, down 17-mile grade, the train had been running for more than 4 hours and had traveled about 58 miles. Until the train had reached Newburg, where the helper was added, the engineer had not used either the air brakes or

[15] All braking and speed information in this section is taken from locomotive event recorder data downloaded after the accident.

[16] The engineer made a 9-psi reduction of the brake pipe for about a minute over about 1/2 mile between MPs 239.5 and 239.

[17] The summit of the grade at Altamont is 2,629 feet above sea level and is crossed at that point by Maryland Route 135.

the dynamic brakes. Between Newburg and Altamont (about 25 miles), the engineer made four applications of the air brakes, totaling 43 minutes and 18 miles. One of the four applications was the 17-pound reduction at Blaser that was noted by the helper engineer.

The train started down 17-mile grade (an average grade of 2.4 percent[18]) at 13 mph in throttle notch 7 with a 6-pound reduction[19] of the train line. The maximum authorized speed from Altamont to Swanton Flats was 30 mph. Over the next 3 minutes, as more of the train crested the summit and began to descend, the engineer increased the train line reduction to 10 psi, which increased the brake application. During this time, he also went from pulling (throttle) to dynamic braking, which he increased to the near maximum according to the event recorder on the lead locomotive unit. For the next 7 minutes, he maintained heavy dynamic braking (which was affecting only the lead locomotive because of the defective cable) and continued to increase air braking by making incremental 1-pound reductions in train line pressure about every 30 seconds until he had a 17-pound reduction.

About 10 minutes down the grade from Altamont, near "Swanton Flats" (Swanton Road MP 219.4), the engineer deactivated dynamic braking and began to apply traction power while still maintaining a 17-pound reduction in train line pressure. The maximum authorized speed from Swanton Flats to Bloomington was 25 mph. The engineer then powered against the train brakes for about the next 2 miles (5 minutes) while keeping the speed between 21 and 24 mph.

When asked later if the reason he powered against the brakes was that he was afraid of stalling out at Swanton Flats, the engineer stated, "Yes, sir. A lot of times, your trains will hang up there if you don't keep your speed up." The engineer outlined the consequences of stalling out at Swanton Flats:

> You stop and then the brakeman goes back and sets up all the brakes. And then you recharge your train and then put the air on and he'll knock them off and then you can continue down the hill. [This takes] I'd say a good two and a half hours somewhere. And in that point, probably longer with the ice, the way the weather was climbing up and down.

[18] Gravity acts on each ton of train weight with a force of about 20 pounds for each percent of grade.

[19] According to the engineer, he considered the reduction a "minimum" or preliminary application of the brakes.

According to CSXT *Train Handling Rules*[20]:

> When necessary to apply power descending long heavy grades, trains must not be pulled for a distance greater than 2 miles if the brake pipe reduction is 18 pounds [psi] or greater.

According to FRA inspectors who have ridden trains down 17-mile grade and to CSXT operating officers and CSXT engineers who regularly operate trains through the accident area, it is possible to control a loaded coal train headed by three modern locomotive units with a 12-pound or less brake pipe reduction and light throttle or dynamic brake modulation. The accident engineer stated several times that he attributed his use of more air brake than usual to the wet snow and icy rail.

About 16 minutes down 17-mile grade, near MP 218, the engineer went from power to heavy dynamic braking with the 17-pound reduction still applied. The train was moving at 24 mph. Several minutes after reaching full or near-full dynamic braking (on the lead unit only), the train's speed reached 28 mph, and the engineer increased the train line reduction to 18 pounds. Over the next 2 minutes, he steadily increased the train line reduction to 26 pounds, or "full service," in response to the train's steadily increasing speed.

The train failed to slow, and about 30 seconds later, while moving at 34 mph at MP 214.34, the engineer put the train brakes in "emergency,"[21] which eliminated any effect from the dynamic braking. The train briefly slowed to 30 mph and then began to accelerate. Despite the emergency application of the air brakes, the train's speed steadily increased over the next 6 minutes to 59 mph.

When the engineer placed the train in emergency, he used the automatic brake valve handle. He did not use the switch in the cab that would have activated an emergency application from the two-way EOT on the rear of the train. He said that he noted the EOT was indicating a train line pressure of 0 psi about a minute and a half after he had made the emergency application and that he therefore felt no need to activate the switch. He said that he was taught to activate the switch only if the emergency application did not apply on the rear.

The conductor said that he noted on his display screen that the train line had depleted to 0 psi and that he, therefore, knew that the emergency brake application had propagated all the way to the end of the train.

---

[20] Effective January 1, 1998, and revised July 1, 1999, Rule 3.3.7, "Speed Control on Descending Grade," paragraph C: "Use of Power on Heavy Descending Grades."

[21] *Emergency braking* increases the brake shoe pressure on the wheel by about 25 percent over that of full service.

When it became apparent that the train was uncontrollable, the engineer attempted to radio the dispatcher on the locomotive radio but was unable to do so. According to the engineer:

> I could not contact the dispatcher. I tried the emergency button, the code 9 and applied on channel 14, but [this was] a Conrail radio, and evidently they're not compatible with ours [CSXT].

The conductor said:

> We tried to contact the dispatcher with the engine radio, but the engine radio is a Conrail radio, and it will not contact our dispatchers, the equipment is not compatible. Radios are locked-in and not changeable by crews.

The trainman trainee was in the second locomotive unit cab. He said:

> The first suspicion I had that anything was amiss was that the brake shoes were burning and there was acrid smoke coming into the…cabin of the second locomotive. I opened the window, and it was even worse. I shut it quickly. Five minutes later, the engineer came on the radio, and said, 'Go to channel 14 and get the dispatcher on the radio.' He said there was a button that I should press, number 5. Well, the second radio is different from what he had, and I didn't know how to operate it, so I went to channel 14, but I was still on channel 8. I broadcast the emergency, but I was unable to get the dispatcher.

During postaccident interviews, the trainman trainee was asked if he had been trained in making an emergency radio transmission. He said:

> Yes, but getting the dispatcher on the radio here is something different. You have to press certain buttons and I wasn't still sure—he gave me some instructions over the radio, but the second radio was different from his, and it had no key pad, so I did not know how to operate the second radio.

The trainman trainee stated that he had seen as many as five different styles of radios on various locomotives but that the instructions he had been given on their use were generic and were not specific to any particular type of radio.

Near Bond, MP 212.6, the trainman trainee inadvertently contacted the operator at West Keyser. The operator responded and said that the train was "lit up," or cleared for continued movement. The conductor told the operator that the train was going through Big Curve at 50 mph and was in "real trouble." The conductor told the engineer that he did not believe the train would get to the bottom of the hill at all. The conductor said that he and the engineer discussed jumping but "figured we were going to land in a ditch someplace with the engine on top of us. I figured our chance of survival was about zero."

The train ultimately reached a speed of 59 mph. The train broke apart and derailed at curves in three separate segments, starting from the rear end. At MP 210.6, the first group of 20 cars separated, and 17 of the 20 cars derailed. At MP 209.8, another 18 cars separated and derailed. Finally, at MP 208.2, the remaining 42 cars separated, and 41 of

the 42 derailed in a general pileup. (See figure 3.) Some of the 41 derailed cars struck a nearby occupied residence, destroying the house and killing a 15-year-old boy and seriously injuring his mother. (See figure 4.) Three other occupants of the house escaped with minor or no injuries. Some of the 41 cars also broke a gas pipeline inside a transfer building near the track; as a result, about 101 customers of Columbia Gas of Maryland temporarily lost natural gas service.

Figure 3. Pileup of derailed coal cars.

Figure 4. Destroyed residence where one fatal and one serious injury occurred.

The three locomotive units finally came to rest more than 2 miles down the track, at MP 206.5, just west of Piedmont Road Crossing, where the crew was subsequently picked up and taken to Cumberland for toxicology testing and interviews.

Damages

Damages to railroad equipment totaled about $1.8 million (67 of the 76 cars that derailed had to be scrapped). Other damages included:

- Lading of coal: $182,753
- Track and signal: $275,000
- Private property: $288,963
- Clean up: $14,297

Total damages were in excess of $3.2 million.

Injuries

Table 1. Injuries.

Injury Scale[a]	CSXT Operating Crew	Residents	Total
Fatal	0	1	1
Serious	0	1	1
Minor	0	2	2
None	3	1	4
Total	3	5	8

[a]49 *Code of Federal Regulations* 830.2 defines fatal injury as "any injury which results in death within 30 days of the accident" and serious injury as "an injury which: (1) requires hospitalization for more than 48 hours, commencing within 7 days from the date the injury was received; (2) results in a fracture of any bone (except simple fractures of fingers, toes, or nose); (3) causes severe hemorrhages, nerve, or tendon damage; (4) involves any internal organ; or (5) involves second or third-degree burns, or any burn affecting more than 5 percent of the body surface."

Personnel Information

Engineer

The Baltimore & Ohio Railroad, a CSXT predecessor, had hired the engineer in 1970. He had started in the maintenance-of-way department working on track and then moved to the mechanical department, repairing cars and locomotives. He changed jobs again to work in train service as a brakeman and finally went to engine service, becoming an engineer in 1976.

According to CSXT records, the engineer had neither medical restrictions nor disciplinary actions. His personal record file showed he had taken or received the following required examinations, classes, tests, and certifications[22]:

Last medical examination	5-03-99	
Driver's License (WV)	6-29-99	
Rules Class	1-27-00	Scored 94 out of 100
FRA Locomotive Engineer Certification[23]		
Knowledge	5-04-99	Scored 98 out of 100
Performance	3-21-99	Scored 90 out of 100
Certified	12-31-99	

Skill Performance Evaluations by a road foreman or supervisor

1-17-00	Scored 95 out of 100
6-27-98	Scored 95 out of 100
5-12-98	Scored 95 out of 100
5-11-98	Scored 90 out of 100
3-05-98	Scored 90 out of 100
9-17-97	Scored 90 out of 100
6-18-97	Scored 95 out of 100
6-13-96	Scored 95 out of 100

[22] A more complete description of the evaluations and examinations can be found later in this report in the "Evaluations" portion the "Engineer Training" section.

[23] CSXT locomotive engineers are tested for FRA certification every 3 years according to 49 CFR Part 240. The FRA locomotive engineer certification program began in January 1992.

The engineer was considered to be one of the most senior and experienced engineers in the Grafton area. He said that he had taken trains from Grafton to Cumberland "thousands of times" since becoming an engineer in 1976. Before the accident, he had been in yard service for approximately 4 years. His yard service involved switching cars within the yard at Grafton, taking empty coal trains up to coal mines around Grafton, and returning with loaded coal trains down grade to Grafton. He had returned to road service on January 9 and had made a total of 20 trips, 12 westbound and 8 eastbound, between Grafton and Cumberland before the accident. Of the eight eastbound trips, all but one were with loaded coal trains.

The engineer made a trip on January 29, the day before the accident. According to CSXT computer records, he was relieved at 11:00 a.m. and off at 12:15 p.m.[24] He said he went home and ate and was asleep by about 2:30 p.m. At 9:30 p.m., about 7 hours later, he said, he was called to report at 11:30 p.m. for the accident train.[25] He said he reported to the Cumberland Yard office about 11:30 p.m. He and the crew were then sent by taxi to Grafton, where they arrived about 2:00 a.m. on January 30. He said he felt well rested when he came on duty.

Conductor

The conductor stated that he had been off for 11 hours and 30 minutes before reporting for the accident train. He was not a qualified engineer.

Trainman Trainee

The trainman trainee had been on the railroad for about a month before the accident. He had spent most of the time in a classroom in Atlanta, Georgia, taking part of his CSXT initial training. He had had no previous railroad experience. At the time of the accident, he was sitting in the second locomotive unit cab because the engineer smoked and he did not like the cigarette smoke.

Train Information

Train Equipment

The locomotive for the accident train consisted of three locomotive units; CSXT 806 (an ex-Conrail unit) was lead, BNSF[26] 9481 trailed next, and CSXT 8666 was last. General Motors Electromotive Division manufactured all the locomotive units, which were high-horsepower six-axle locomotive units with high-adhesion trucks and extended range dynamic braking capability.

[24] Eastbound loaded coal train V986-28. On-duty time was 11:30 p.m. on January 29.

[25] The engineer was off 11 hours and 15 minutes between the time he finished and 11:30 p.m., the time he was to report.

[26] Burlington Northern Santa Fe Railway.

The first unit, CSXT 806, was an SD80MAC; BNSF 9481 was an SD70MAC; and CSXT 8666 was an SD50. On these units, maximum dynamic braking is achieved when the locomotive is traveling between 4 and 24 mph. The maximum dynamic braking effort is 96,000 pounds for an SD80MAC, 81,000 pounds for an SD70MAC, and 60,000 pounds for an SD50.

The accident train had 80 coal cars, all of which were high-side "bathtub" gondola cars designed for unit coal train service. The cars were relatively uniform in appearance. Each car was 45 feet long (48 feet, 8 inches long over the couplers) and had two two-axle trucks and 36-inch wheels. The cars were used between coalmines and power plants. The cars had been inspected and repaired as necessary at CSXT facilities at either Curtis Bay or Brunswick, Maryland.

According to the CSXT consist list, the train was 4,145 feet long (the length of the combined cars was 3,920 feet). The trailing tonnage (the cars only) was 10,569 tons, and the tons per operative brake[27] was 132.

Track Information

The railroad from Grafton to Cumberland, Maryland, which traverses the accident area, was built about 150 years ago as part of the Baltimore and Ohio Railroad.[28] The general east-west railroad line location and grade have remained unchanged. The railroad is now part of CSXT Allegheny Division (formerly the Baltimore Division), Mountain Subdivision, and consists of two mainline tracks: No. 1 (westbound)[29] and No. 2 (eastbound), with their attendant sidings and industrial spurs. Most of the rail is continuous welded rail with some jointed rail, which varies in size from 122 to 140 pounds,[30] depending on location. The rail was manufactured from 1951 through 1998, and the track was last surfaced during the 1980s, when crossties were replaced. The maximum authorized speed varies from 25 to 45 mph, depending on the location of the track and the type of train.

The site of the accident, 17-mile grade, is the railroad between Altamont (MP 223.4) and Bloomington (MP 208.6) and has an average 2.4-percent grade. The grade has 10 rail lubricators.[31]

[27] *Tons per operative brake* is the total trailing tonnage divided by the number of freight car brake control valves, which usually corresponds to one per car, as in this case.

[28] The Baltimore and Ohio Railroad reached Wheeling, West Virginia, over this railroad on December 24, 1852.

[29] The No. 1 main track is the northernmost track.

[30] Rail sizes are standardized by weight per 3-foot length by the American Railway Engineering Association (AREA), a component of the Association of American Railroads.

[31] *Rail lubricators* are fixed devices, usually located near railroad track curves, that lubricate the side of the railhead to minimize rail and wheel wear.

Signal Information

Train movement on the two mainline tracks is governed by visual indication of automatic block, color-position wayside signals set for movement in the above indicated direction (No. 1 track westbound, No, 2 track eastbound) for each track only. Train movements in the opposite direction of the set signals are made under some form of train order authority from the dispatcher.

Operations Information

Train movements between Grafton and Cumberland were governed by the following: wayside block signal indication; CSXT Allegheny Division Timetable No. 1, effective January 1, 2000, for the Mountain Subdivision; and CSXT Allegheny Division Western District General Bulletins.

According to the timetable in effect at the time of the accident, for eastbound loaded coal trains, the maximum authorized speed between Altamont and Swanton was 30 mph; between Swanton and Bloomington (MP 208.6), the maximum authorized speed was 25 mph.

Meteorological Information

The CSXT utility employee who worked on the accident train in Grafton stated that the temperature was warming and that the precipitation had changed from snow to sleet and then rain. By the time the train had left Grafton, he said, the temperature had warmed to the mid- to high 30s and "everything was thawing out."

The train conductor said that some freezing rain was falling in Grafton when the crew was releasing the hand brakes. He said that the grab irons were slippery and that the crew took extra care. He said that during the trip, it was snowing with a little bit of snow on the cap of the rail. He also said that there was some blowing snow.

The engineer said:

> The ground was covered, and it was snowing and raining and sleeting…. It was raining when we left Grafton, and [as we traveled] further east…it turned to snow and ice. The rails were covered with wet snow and ice. We were clearing the rail as we went.

When asked what the temperature was at the time, he said, "approximately in the 20s."

Investigators asked the helper brakeman whether any ice or snow had built up on the trucks or brake shoes of the cars when the helper locomotive was attached. He said that

it had been snowing but that he had not noticed any ice or snow on the running gear. He said that the snow had been 3 or 4 inches deep but that it had not been on or above the rails.

The National Weather Service described the weather at the time of the accident as follows:

Morgantown

0653 EST. Sky overcast; winds 170 degrees at 5 knots; visibility 10 miles; temperature 36° F; dew point 36° F; snow ended 0630 EST.

0706 EST. Sky overcast; winds 150 degrees at 5 knots; visibility 10 miles; temperature 36° F; dew point 36° F.

Martinsburg

0650 EST. Sky overcast; winds calm; visibility 2 miles; light snow; temperature 41° F; dew point 21° F; 4 inches of snow on the ground.

0750 EST. Sky overcast; winds 020 degrees at 4 knots; visibility 4 miles; mist; temperature 23° F; dew point 21° F. Snow ended 0740 EST.

Petersburg

0650 EST. Sky overcast; winds calm; visibility 10 miles; temperature 27° F; dew point 27° F.

0750 EST. Sky overcast; winds calm; visibility 10 miles; temperature 23° F; dew point 23° F.

Toxicological Information

The engineer and conductor were taken to Memorial Hospital in Cumberland about 2 hours after the derailment, where they gave blood and urine specimens for the toxicological testing required by the FRA.[32] The results of the tests were negative for drugs and alcohol.

[32] 49 CFR 219.201.

Tests and Research

Track and Signal Tests

Postaccident track inspections and a review of the maintenance-of-way records revealed no track anomalies. The 10 rail lubricators in the accident area were inspected and found to function as designed with no discharge of excess lubricant noted. Postaccident tests and a review of the records indicated that the signal and train control systems functioned as designed.

Accident Site Inspection of Cars

Safety Board investigators examined the derailed and wrecked coal cars on the day of the accident. Because so many of the cars had been completely destroyed, a brake function test could not be performed; however, almost all of the brake shoes and wheels showed signs of heavy braking. Wheel treads had bluing, indicating enough heat had been generated to change the micro-structure of the steel. Brake shoe surfaces were burned and blackened from the oxidation and melting of the composites that make up the shoes. The severity and consistency of the damage to the brake shoes indicated that the emergency brake application had fully propagated through the train to the last car. That the application had fully propagated was later substantiated by the event recorder data from the EOT.

End-of-Train Test

The flashing EOT telemetry device on the end coupler of the last car in the train survived the accident because the last car did not derail. On February 2, 2000, the communications maintainer at the CSXT Cumberland radio shop tested the flashing rear-end device. All communication and pneumatic functions performed as designed. Battery voltage was found to be 13 volts, the proper voltage.

Locomotive Tests and Inspections

The locomotive consist for train V986-26 survived the accident intact. Safety Board investigators found nothing in the maintenance and service records for the locomotive units that indicated a condition that would have caused or contributed to the accident.

Investigators measured and recorded brake shoe thickness and brake cylinder piston travel. They compared the recorded air brake pressure readings of the equalizing reservoir, brake pipe, brake cylinder, and main reservoir of each locomotive unit to specifications. Other than what had been affected by the excessive wear caused by the heavy braking during the accident, everything was within specifications and standards.

On February 1, 2000, the Cumberland locomotive shop tested the air brakes of the locomotive consist. The brake pipe leaked 2 pounds in 3 minutes, which was within acceptable limits. The main reservoir leaked 4 pounds in 3 minutes, which was unacceptable. A leak was found in the main reservoir. The leak was behind the clamp in

front of the No. 2 main reservoir cylinder on the lead locomotive unit, CSXT 806. Investigators determined that such a leak would not affect the application of the train or locomotive air brakes but would lower the pressure of the main reservoir enough to cause the air compressors to activate more frequently.

Postaccident testing of the engineer's radio and subsequent investigation revealed that the radio worked as designed.

Multiple-Unit Cable

Mechanical personnel from the Cumberland locomotive shop tested the dynamic braking system about 1:30 p.m. on January 31 at Westernport, Maryland. The testing was under the auspices of FRA inspectors. The No. 24 pin socket of the multiple-unit cable between the first and second locomotive units was defective. The defect prevented the dynamic brake excitation voltage of the lead unit from reaching the two trailing units. Thus, only the lead unit produced dynamic braking. Testers replaced the defective multiple-unit cable and performed both a static and running test of the dynamic brake system of the locomotive consist. The system then worked properly.

Event Recorders

CSXT personnel downloaded the data from the event recorders of all three locomotive units. They gave floppy diskettes containing the data files to Safety Board investigators at the accident scene. The Safety Board's laboratory in Washington, D.C., examined the diskettes. Event recorder mileposts and times were based on evidence gathered at the accident site. Locomotives CSXT 806 (the lead) and BNSF 9481 had Rockwell solid-state event recorders. Locomotive CSXT 8666 had a Quantum Engineering, Inc., event recorder. The data from all three locomotive matched in all significant parameters.

Calculation of Braking Horsepower

The air-brake system is a powered braking system that uses the power of compressed air to move a series of rods and levers on each locomotive and car to force a brake shoe against each wheel tread to slow or stop the rotation of the wheel by friction. Thus the tread brakes, also called the "friction brakes," may be considered a subcomponent of the overall air-brake system. Since the retarding or braking force is generated by friction, a great deal of heat is created when the brakes are applied. The energy and resultant heat is commonly expressed as braking horsepower (bhp). The more energy and effort that is needed to stop a train, the greater the braking horsepower, and the greater the heat. High braking horsepower involving tread brakes is synonymous with the creation of high heat and temperatures. Modern composition brake shoes are designed to withstand temperatures up to about 500° F but rapidly deteriorate at higher temperatures.

After the accident, theoretical calculations were performed to determine if the accident train speed may have exceeded the capacity of the tread-braked air-brake system

to stop the train, and if so, when. The calculations and method used were developed by David G. Blaine[33] for use by air brake and brake shoe manufacturers.[34]

According to the above reference, the maximum safe braking horsepower for safe practical operation is 30 bhp for a 36-inch wheel.[35] The calculated bhp per wheel for the accident train traveling at various speeds down a 2.4 percent grade was as follows:

Speed (in miles per hour)	Braking Horsepower (bhp) per Wheel
5	9.69
10	19.12
20	33.45
30	48.75

In order for the accident train on 17-mile grade to maintain 30 bhp or less, the accident train would have had to travel no faster than 15 mph.

Load Cell Brake Shoe Test

In order to validate the theoretical bhp calculations, it was necessary to perform some type of actual braking tests, either with an identical train or by using a dynamometer. For safety reasons, arrangements were made with Wabtec (formerly Westinghouse Air Brake) to conduct dynamometer tests.

As a prerequisite for accurate dynamometer testing, actual brake shoe force against the wheel must be used. Actual brake shoe forces are measured on a static car using a load-cell brake shoe device, sometimes called a "golden shoe" or "gym shoe." The car brake shoes are replaced with brake shoes that are embedded with pressure-sensitive transducers.[36] When the brakes are applied, the pressure of the shoe against the wheel changes the conductivity of the electrical circuit through the shoe, which is then converted to a force reading and recorded.

Because all but four coal cars were destroyed or severely damaged in the derailment, three exemplar cars, one each of the three major car types involved in the accident,[37] were tested under the direction of the Safety Board at the CSXT car shop in Cumberland, Maryland, on August 8 and 9, 2000. All parties to the investigation

[33] See American Society of Mechanical Engineers (ASME) publication 69-WA/RR-6, "Determining Practical Tonnage Limits and Speeds in Grade Operations," by David G. Blaine as presented to the ASME conference in November 1969.

[34] Other referenced braking documents were "Calculated Tonnage Per Operative Brake in Grade Service," for the Air Brake Association Annual Meeting, September 12, 1961; and "Braking Duty in North American Freight Train Service and Effects on Brake Equipment, Brake Shoes and Wheels," by D.G. Blaine, F.J. Grejda, and J.C. Kahr, January 25, 1978.

[35] All the cars in the accident train had 36-inch wheels.

[36] A transducer is a device that converts one form of energy into another.

[37] Although four types of cars were used in the accident train consist, only three types were tested since only five cars of the fourth type were in the train.

participated in the testing. Wabtec technicians from the company's facility in Wilmerding, Pennsylvania, were provided, along with the device to assist in the tests.

Twenty-one consecutive air brake applications[38] or "steps" were made using a cart-mounted control valve at the same pressures and in the same sequence as those made by the accident engineer and recorded by the accident train's event recorders. After each application, the brake rigging was tapped with hammers to simulate the movement and vibration of the moving accident train, and then raw force readings were taken for each of the eight brake shoe locations on each of the three cars. There were 168 readings for each car, for a total of 672 separate recorded raw force measurements. The Wabtec technicians then converted these raw force numbers into actual force readings, and a single application reading for each car was developed by averaging the readings from the eight shoe locations for each air brake change for each car. These readings were later used on the dynamometer machine.

Dynamometer Tests

The Association of American Railroads (AAR) sets performance specifications for high-friction composition-type brake shoes such as those involved in the accident and for the manner in which such brake shoes are tested for acceptability. Specifications and procedures can be found in the AAR *Manual of Standards and Recommended Practices*, Specification M-926-99. All railroad brake shoe manufacturers are required to test their brake shoes periodically to ensure that the shoes meet the AAR's specifications. To ensure compliance, the AAR periodically reviews brake shoe tests. Consequently, the brake shoe manufacturers have dynamometer machines for testing brake shoes.

The dynamometer consists of a large electrical motor that turns a shaft on which fixed and movable inertial discs are attached to provide momentum. At the end of the shaft is a modified[39] railroad car wheel. When the wheel is spun, the test brake shoe is applied to the wheel tread as it would be during the actual braking of a railroad car or locomotive. Mounted sensors on the dynamometer are attached to a computer that calculates velocity, net shoe force, average wheel temperature, retarding force, coefficient of friction, and bhp.

On August 22, 2000, representatives of parties to the accident gathered at the Railroad Friction Products Corporation plant at Maxton (Laurinburg), North Carolina, where a dynamometer machine tested brake shoes under the accident conditions. Speeds and application times were taken from the event recorder data. The shoe forces used were those previously measured and recorded at Cumberland for each of the three major coal car types involved in the accident. The difference between the ambient temperature of January, when the accident took place, and that of August was not considered significant because of the magnitude of the temperatures that develop at the shoe-wheel interface. Each of the new brake shoes used for the simulation was broken in or slightly worn before

[38] Almost all of these applications were 1-pound incremental brake pipe reductions.

[39] The dynamometer railroad car wheel has a slightly modified tread profile to allow a more accurate measurement of the temperature, pressure, and coefficient of friction.

being used, following the practice in brake shoe testing that the AAR recommends in order to provide the most realistic response.

Shoe forces, velocity (train speed), and application times were preprogrammed into the dynamometer control computer for each of the three coal car types. The computer then drove the dynamometer and applied the brake shoe to simulate the forces, speeds, and timing of the accident. This procedure was followed for each type of car. The computer then recorded the resulting wheel temperatures, retarding forces, coefficients of friction, and horsepower values. (See table 2.)

Table 2. Braking Efficiency.

Car Type	Step	Milepost	MPH	Temp F	Force lbs.	Coefficient of Friction	BHP
CSXT	11	220.12	23.8	431	1013	0.434	64
392663	12	216.46	27.8	598	669	0.259	50
	13	216.34	27.9	606	703	03263	52
CSXT	11	220.12	23.9	329	829	0.433	53
385995	12	216.46	27.9	557	611	0.294	45
	13	216.34	27.9	565	655	0.277	49
NYC	11	220.12	23.8	335	821	0.445	52
503250	12	216.46	27.8	536	566	0.310	42
	13	216.34	27.8	542	602	0.286	45

Based on these values, for two of the three car types tested, the tests showed a loss of retardation and braking ability under operating and braking conditions that existed between steps 11 and 12 in table 2. For the other car type, loss of braking efficiency occurred under the conditions existing between steps 12 and 13. These steps correspond to the braking actions the accident engineer took when the train was between MP 220.12 (step 11) and MP 216.46 (step 12), or MP 216.34 (step 13). These locations match the area at Swanton Flats where the engineer powered against the train air brakes (17-psi reduction of the train line) for several miles while traveling 23 to 28 mph.

Other Information

Engineer Training

Classroom Training. CSXT began its engineer recertification program in 1992. In 2000, the program involved 2 1/2 days of classroom presentations and testing. The FRA requires an engineer to be recertified every 3 years. CSXT requires the engineer to take the

recertification training and testing sometime during the third year. If the engineer successfully completes the training, CSXT issues the certification card on the last day of that year.

Recertification classes were held in Atlanta, Georgia, and in Cumberland, where the accident engineer was recertified. Before he took the class, CSXT had mailed him a workbook. He was required to fill out the workbook (by answering between 250 and 300 questions) before reporting to class. A completed workbook was a condition of class attendance and was checked by the instructors for completeness and correctness. The workbook questions focused on FRA-required subject matter.

The classroom instruction focused on updating the engineers on air brake methods, new locomotives and equipment, hazardous materials, and changes in train handling rules. Each engineer took a knowledge test, which included a customized part devoted to the unique physical characteristics of the portion of the railroad on which the engineer operated. The accident engineer took the classroom training in May 1999 and scored 98 out of 100 on the written examination.

Evaluations. Each engineer's performance is evaluated at least once a year by railroad operating officials, usually the road foreman. The CSXT Locomotive Engineer Evaluation Report is the form used in the evaluation. When the evaluation is done in the same year that the engineer is to be recertified, the evaluation also serves as the recertification performance test, since the criteria and standards are the same. The accident engineer's last recertification performance evaluation was on March 21, 1999. He scored 90 out of 100. The evaluation was done on the Thomas Subdivision at BAH-28 while he was in switching service. He lost 10 points because, according to the form, he "didn't make standing and running brake test on initial movement [and] didn't test handbrake."

The accident engineer was evaluated on January 17, 2000, about 2 weeks before the accident, when a road foreman of engines evaluated him on an eastbound loaded coal train[40] and gave him a score of 95 out of 100 points. According to the form, 6 safety rules, 17 operating rules, and crew resource management were discussed. The discussion included efficiency tests and the downloading of event recorders. The form shows that the road foreman rode with the accident engineer for 7 hours, from Grafton to Keyser, which should have included the accident area. However, when the engineer was asked whether a road foreman had ever ridden with him from Altamont down to Bloomington on 17-mile grade before the accident,[41] he replied, "No." He indicated that no road foreman who had evaluated him had ever made a complete trip. He said that the road foremen rode between Keyser and Cumberland, or between Grafton and Rowlesburg, on either side of the accident area, but not through the accident area. CSXT presented evidence that the engineer had made a trip down 17-mile grade on January 17, 2000, accompanied by a road foreman and another qualified engineer, but that the qualified engineer was operating the train, with the accident engineer observing.

[40] Train U822-15 was similar to the accident train; it had 82 cars and 10,470 trailing tons.

[41] For purposes other than an efficiency test.

As a result of the Safety Board investigation of the runaway and subsequent derailment of a Southern Pacific Transportation Company train in San Bernardino, California, in 1989,[42] the Safety Board issued the following recommendation to the FRA regarding engineer qualification and supervisory oversight:

> R-90-22
>
> Promulgate regulations regarding the qualification of engineers to require that supervisors ride with an engineer in both directions on mountain grade territory before qualifying the engineer over the entire territory and that the ride be performed on a train that is comparable in size and trailing tonnage to those typically most difficult to operate on that territory.

The FRA issued regulations (49 *Code of Federal Regulations* [CFR] Part 240 Subpart B, and section 240.127) that fulfilled the recommendation. The recommendation was classified "Closed—Acceptable Action" on January 21, 1992. As a result of this recommendation, all railroads, including CSXT, now include such requirements in their operating and engineer qualification rules.

Pilot Request. According to CSXT Rule 520:

> Engineers must be fully familiar with the physical characteristics of the territory over which they are called to operate. An engineer must not accept a call to operate over a territory that the engineer has not been over in the previous 12 months.

Because the engineer had been in yard service for 4 years before taking this road assignment, he requested a pilot[43] from the road foreman upon his return to road service on January 9, 2000.

The engineer said:

> I talked to the road foreman, general road foreman, and he told me that I could have a pilot for two round trips. I got one, one trip out of Cumberland [westbound]. We brought a train out and taxied back to Cumberland, and when I asked for one on the second call I was told [by the crew caller] that [he] and the lead caller would decide if I needed one.[44] If so, there would be one there, and when I reported to work, there was none.

[42] National Transportation Safety Board, *Derailment of Southern Pacific Transportation Company Freight Train on May 12, 1989, and Subsequent Rupture of Calnev Petroleum Pipeline on May 25, 1989, San Bernardino, California*, Railroad Accident Report NTSB/RAR-90/02 (Washington, D.C.: NTSB, 1989).

[43] A *pilot* is a qualified employee assigned to a train when the engineer or conductor is not acquainted with the rules or the portion of a railroad over which the train is to be moved.

[44] Crew callers are not railroad officials or supervisors and do not have the authority to make such determinations. The CSXT superintendent stated that the crew caller's response to the engineer's request was a serious breach of policy and procedure and said that CSXT had taken steps to prevent similar incidents.

The engineer said he was aware that the road foreman who normally made arrangements for a pilot was in Richmond, Virginia, at the time and therefore was unavailable. Consequently the engineer never had a pilot for an eastbound trip (which included descending 17-mile grade).

Two-Way EOT Training. When asked whether he was trained to activate the two-way EOT emergency switch after an emergency application with the brake handle, the engineer testified that the EOT emergency switch was to be used only if the EOT was not showing 0 psi at the rear of the train after the emergency application was made.

According to the CSXT manager of engineer training, at the time the accident engineer took his recertification training, two-way EOTs were being introduced. He said the procedure to activate an EOT emergency brake application along with a brake handle emergency was taught orally but that instructional materials had not yet been updated to document this new training. He said he believed that the accident engineer had received this new instruction during recertification training, but he could not document the training.

After the accident, CSXT expedited the updating of instructional materials and tests to reflect the EOT activation procedure when making a brake handle emergency application. In addition, all new EOTs purchased by CSXT have a feature that automatically and simultaneously initiates an emergency application at the rear of the train when an emergency application of the brakes is made by the automatic brake handle in the locomotive cab.

Determination of Maximum Authorized Speeds and Braking Capability

Railroads determine maximum authorized speeds for various rail segments based on a number of factors, such as tons per operative brake for control and stopping ability, descending grade, signal spacing, and track structure. Any one factor may be the decisive factor in determining the maximum authorized speed. The lowest speed associated with any one factor will usually become the maximum authorized speed.

For the past decade, most railroads, including CSXT, have also used a computerized train dynamics analyzer machine to help determine maximum authorized speeds and appropriate train handling procedures. The use of the train dynamics analyzer has grown as locomotive and braking technology have advanced. According to those familiar with the capabilities of train dynamics analyzers, the machines cannot accurately replicate the complex phenomenon of heat fade that occurs between the brake shoes and wheel tread under severe braking conditions.

According to the CSXT manager of accident prevention, the maximum authorized train speed for coal trains down 17-mile grade had been 25 mph for at least the past 20 years, the period for which timetable documentation was available. The CSXT central region vice president told Safety Board investigators that CSXT included the supplemental braking effects of dynamic braking when the railroad determined maximum authorized speeds for various track segments. Because dynamic braking may fail suddenly

and without warning, it is not considered by the FRA to be sufficiently reliable to be used in determining maximum authorized speeds.

The FRA does not specifically set or directly monitor railroad maximum authorized speeds, although it does regulate train braking, which is a factor in setting maximum authorized speeds.[45]

Because the air brake system is the only train braking system that can both be operated from the locomotive and reliably stop a train,[46] that system is considered the train's primary braking system. This concept was not codified until after the accident in the revised power brake regulations, *Brake System Safety Standards for Freight and Other Non-Passenger Trains and Equipment*, at 49 CFR Part 232, which were issued on January 17, 2001, and made effective in May 2001. Part 232 regulation series 100 and 200 will not become effective until April 2004. One of these regulations, Part 232.103(a), states that:

> A train's primary brake system shall be capable of stopping the train with a service application from its maximum operating speed within the signal spacing existing on the track over which the train is operating.

Also, 49 CFR 232.109(j) states:

> The railroad's operating rules shall be based on the premise that the friction brakes are sufficient by themselves, without the aid of the dynamic brakes, to stop the train safely under all operating conditions.

CSXT Postaccident Actions

On February 2, 2000, the CSXT general manager for the Allegheny Division issued Western District General Bulletin No. 207, *SUBJECT: Mountain Subdivision Timetable Special Instruction Modifications*, which was effective immediately. For eastbound trains between Altamont and West Virginia Central Junction (MP 207.8), the maximum authorized speed for all trains was lowered from 25 to 20 mph. Engineers were instructed: "If train speed cannot be maintained at or below the maximum authorized speed of 20 mph, the train must be stopped immediately with an emergency brake application." Locomotives for all trains originating in Grafton were required to have a running dynamic brake test before being attached to the train. Engineers of run-through trains[47] were required to test the dynamic brakes before passing Westerman (MP 274). Engineers of trains originating east of Westerman were required to make a running dynamic brake test at the first available location before Mountain Lake Park (MP 229.8). Detailed instructions were also given on how to perform the dynamic brake testing on one or more locomotive units.

[45] The FRA also indirectly controls maximum authorized speeds through track regulations, 49 CFR Part 213, "Track Safety Standards," which set maximum train speeds for different classes and conditions of track.

[46] Handbrakes can stop a train but currently cannot be operated from the locomotive cab. Dynamic brakes can slow a train but cannot reliably stop a train under all operating conditions.

[47] A *run-through train* does not originate in Grafton but stops there only for a crew change.

Analysis

Exclusions

Weather

Investigators considered whether the weather might have played a role in the accident. Snow and ice could have accumulated between the brake shoes and wheels on the coal cars and made the tread braking less effective, thus increasing the chance of creating a runaway.

Postaccident examination of the running gear of the cars showed no signs of any precipitation accumulation. The shallowness of the snow below the top of the rail and its water content, as described by train and yard personnel and later verified at the accident scene by investigators, did not support any scenario involving snow and ice accumulation on the brake shoes or wheels. The fact that the train brakes had been applied much longer than necessary to clean any snow and ice from the brake shoes before the descent of the train down 17-mile grade also did not support the idea of a runaway caused by moisture accumulation. Finally, the weather reports from the surrounding area recorded temperatures slightly above or below freezing, again suggesting it was unlikely that there had been an accumulation of blowing snow about the trucks and brake shoes of the freight cars or locomotive. Consequently, the Safety Board concludes that the weather did not cause or contribute to the accident.

Fatigue

Investigators reviewed the work/rest cycle records of the engineer and conductor, their 72-hour histories before the accident, and the train handling data recorded by the event recorder.[48] All parties to the investigation agreed that the crewmembers were qualified to perform their duties according to CSXT procedures and accepted practice. Nothing suggested that the train crewmen were fatigued or asleep. The crewmembers said that they were rested in accordance with the Federal Hours of Service Act, and no postaccident evidence or witness suggested anything to the contrary. The engineer's work schedule, his statement that he felt well rested, and the train handling data from the event recorder all suggested that fatigue was not an element in this accident. Therefore, the Safety Board concludes that crewmember fatigue was not a factor in the accident.

Toxicology

The engineer and conductor were tested after the accident, and no alcohol or drugs were found. Therefore, the Safety Board concludes that neither alcohol nor drug use caused or contributed to the accident.

[48] The event recorder, by documenting each throttle and brake manipulation, provides some indication of the operator's level of alertness and skill.

Track and Signals

The postaccident track inspections and a review of the maintenance-of-way records revealed no contributory track anomalies. The 10 rail lubricators in the accident area were inspected and found to function as designed, with no excessive lubricant found that would have affected train braking. Nothing was found to suggest that either the track conditions or the signal and train control systems caused or contributed to the accident. The Safety Board concludes that neither the signal and train control systems nor the track conditions were factors in the accident.

Event Recorder

Even though CSXT downloaded the three locomotive unit event recorders without Safety Board or FRA supervision or permission, there was no evidence that the event recorder data had been altered or tampered with.

Air Brake System

Postaccident testing of the train's air brake system was not possible because so many cars were destroyed in the accident; however, the air brake test performed on the coal cars before they left the mine, the preaccident initial terminal air brake test, and the set-and-release tests done when the helper locomotive was attached and when it was detached suggest that the air brake system functioned as designed. The engineer stated that the air brakes functioned "normally" and indicated that he had had no air brake problems before the accident. The brake pipe pressure that was recorded on the event recorder from both the front and rear of the train show that the air brake system had responded to the engineer and had functioned as designed.

Postaccident examination of the coal car wheels and brake shoes, particularly those at the end of the train, showed that the brakes had been applied heavily and for a relatively long time. Many wheels showed discoloration caused by high heat, including bluing on the tread and rim and red coloration on the wheel plate. The brake shoes were burnt, glazed, and cracked and in various stages of degradation caused by the high heat. The physical evidence on the wheels and brake shoes also showed that the applications had propagated through the entire train without any train line blockage.

The conductor said that the EOT display in the locomotive cab showed 0 psi brake pipe pressure after the engineer made the emergency brake application, also indicating that the application had propagated to the end of the train without blockage. Investigators concluded that the air brakes had functioned as designed and that the brake applications had applied throughout the train. Therefore, the Safety Board concludes that the train's air braking system did not cause or contribute to the accident.

Dynamic Braking and Train Speed

To a large extent, train speeds and train handling are determined empirically within the limitations of the track structure and signal or train control systems. As with the maximum authorized speed through the accident area, most speed limits have not changed over a long period, particularly speed limits for common trains like coal trains, even though the weight of trains has steadily increased over time. CSXT has been able to maintain relatively high speeds despite increasing train weight because of the emphasis on and continued improvement of locomotive dynamic braking.

Dynamic braking on the two trailing locomotive units, while available, could not be activated because of the defective multiple-unit cable between the first and second locomotive units. Because he did not have the benefit of full dynamic braking, the engineer had to increase the air brake application beyond what normally would have been expected in order to control speed. By so doing, he unwittingly overheated the tread-brake system. Further, the maximum authorized speed for the accident grade had been established based on the assumed availability and use of dynamic braking. Judging from the CSXT's experience of successfully negotiating 17-mile grade at the maximum authorized speed, the combination of dynamic and air braking was, in fact, adequate to hold a train at or under the established maximum authorized speed as the train progressed down the grade. The Safety Board concludes that if all the available dynamic braking could have been activated on the accident train, the derailment probably would not have occurred.

Unfortunately, problems can occur when, as in this accident, the dynamic braking system functions only partially or suddenly and unexpectedly fails when the train is moving too fast to be stopped by the air brakes alone. Calculations and dynamometer testing confirmed that CSXT eastbound loaded coal trains on 17-mile grade could not be controlled or stopped at the maximum authorized speed without the use of significant dynamic braking. The Safety Board concludes that by using the effects of dynamic braking in its speed calculations, CSXT established a maximum authorized speed over and down 17-mile grade that was too high to ensure that heavily loaded trains could be stopped using air brakes alone.

The lead locomotive unit had no device for checking the real-time condition of the dynamic brakes on the trailing locomotive units (or the signal continuity through the multiple-unit cable), nor was such a device required at the time of the accident. The condition of the dynamic brakes on trailing units can be determined by observing the ampere gage in the cab of each of the trailing units, but those units normally do not have crewmembers aboard. In this accident, an inexperienced trainman trainee was on board the second unit, but only because of his aversion to cigarette smoke. And no one would have been able to check the gage in the third unit because CSXT rules, for safety reasons, generally prohibit crewmembers from moving between locomotive units while the train is in motion. In short, even though CSXT had made the availability of dynamic brakes critical by using their effects in calculating the maximum authorized speed, the company had no requirement that the dynamic braking system be tested before or during use to

determine how well it was functioning. After the accident, CSXT instituted a running dynamic brake test procedure for its Mountain Subdivision.

As a result of the previously mentioned Safety Board investigation of the runaway and subsequent derailment of a Southern Pacific Transportation Company train in San Bernardino, California, in 1989, the Safety Board issued the following recommendation to the FRA regarding dynamic braking:

> R-90-23
>
> Study, in conjunction with Association of American Railroads, the feasibility of developing a positive method to indicate to the operating engineer in the cab of the controlling locomotive unit the condition of the dynamic brakes on all units in the train.

The Safety Board classified this recommendation "Closed—Unacceptable Action/Superseded" after its investigation of a runaway Union Pacific train at Kelso, California.[49] After that accident, the Safety Board issued the following safety recommendation to the FRA:

> R-98-6
>
> Require railroads to ensure that all locomotives with dynamic braking be equipped with a device in the cab of the controlling locomotive unit to indicate to the operating engineer the real-time condition of the dynamic brakes on each trailing unit.

This recommendation was classified "Open—Acceptable Response" on January 11, 2000.

The FRA has included in the new power brake regulations (49 CFR 232.109) the following dynamic braking requirements:

> (a) A locomotive engineer shall be informed in writing of the operational status of the dynamic brakes on all locomotive units in the consist at the initial terminal or point of origin for a train and at other locations where a locomotive engineer first takes charge of a train.
>
> (g) All locomotives equipped with dynamic brakes and ordered on or after August 1, 2002, or placed in service for the first time on or after April 1, 2004, shall be designed to:
>
> (1) Test the electrical integrity of the dynamic brake at rest; and
>
> (2) Display the available total train dynamic brake retarding force at various speed increments in the cab of the controlling (lead) locomotive.

[49] National Transportation Safety Board, *Derailment of Union Pacific Railroad Unit Freight Train 6205 West Near Kelso, California, January 12, 1997*, Railroad Accident Report NTSB/RAR-98-01 (Washington, D.C.: NTSB, 1998).

(h) All rebuilt locomotives equipped with dynamic brakes and placed in service on or after April 1, 2004, shall be designed to:

(1) Test the electrical integrity of the dynamic brake at rest; and

(2) Display either the train deceleration rate or the available total train dynamic brake retarding force at various speed increments in the cab of the controlling (lead) locomotive.

While the new regulation does not require a dynamic braking display for each trailing locomotive unit, as recommended by the Safety Board, a total real-time dynamic braking effort display as described above may be as useful and acceptable. The Safety Board is also pleased to note that the accelerometer will be used in conjunction with the FRA regulation that will require a train descending a grade of 1 percent or greater to be immediately stopped if it exceeds the maximum authorized speed by more than 5 mph. Therefore, the Board has reclassified Safety Recommendation R-98-6 "Closed—Acceptable Alternate Action."

Tread Brakes/Air Brakes and Stopping Ability

High-friction composition-type brake shoes such as those involved in the Bloomington accident significantly degrade when the average wheel temperature exceeds 500° F. Considerable "heat" or brake fade also occurs around these higher temperatures, which results in a noticeable drop in the coefficient of friction and braking ability.

At the time of the accident, the maximum authorized speed from Swanton (MP 219.4) to Bloomington (MP 206.2) was 25 mph. CSXT lowered the maximum authorized speed to 20 mph after the accident in an attempt to create a safe speed. CSXT Rule 34-D requires that, on descending grades of 1 percent or more, a train must be stopped using an emergency brake application if the train's speed reaches 5 mph more than the maximum speed permitted for that train. Thus, even under the reduced postaccident maximum speed of 20 mph, the engineer could still attain 25 mph before attempting to stop the train. For the accident train, at 20 mph, the recognized safe bhp of 30 would have been exceeded by more than 10 percent, and at 25 mph, the bhp would have been exceeded by more than 62 percent.

According to commonly accepted air brake industry standards, a train with cars that have 36-inch diameter wheels, such as the accident train, should not exceed an average bhp of 30. The accident train had such a bhp, but only when it was traveling about 15 mph. At 20 mph, its bhp was 49.54; and at 30 mph, its bhp was 64.40. The large disparity in bhp between the recommended 30 and the actual number the accident train had at its maximum authorized speed translates into significant increases in the heat generated at the interface between the brake shoe and wheel tread. The increases in heat, in turn, degrade the brake shoes and cause heat fade and the loss of molecular adhesion, resulting in a catastrophic loss of retardation and braking power—a runaway train.

Actual brake shoe force measurements were taken for each brake application on identical coal cars on August 8, 2000. Using these shoe forces, the bhp calculations were then substantiated by dynamometer tests performed on August 22, 2000. These test results also indicated that the heat from the applied accident train brakes had reached the critical point about the time the train began to pass through Swanton Flats, MP 219.4, only about 3.6 miles into 17-mile grade. By that time, the temperature of the brake shoes/wheels exceeded the thermal limit of the brake shoes and resulted in a loss of braking power.

The dynamometer tests validated the theoretical calculations. The calculations and dynamometer tests showed that the maximum authorized speed of 25 mph was too high and that, in fact, any speed above 15 mph was too high to allow the train to be brought to a stop by the air brakes alone. Because the air brake system is the only braking system capable of bringing a train to a stop, it is incumbent upon railroads to set maximum speeds that ensure that trains can be stopped without the use of supplemental braking.[50] At the time of the accident, there was no regulation requiring a train to have the capability to stop by use of the air brake system alone. According to FRA officials, the agency believed this was understood by the railroads, but it was not. CSXT management had included the effect of dynamic braking in determining maximum authorized speeds. Including in the maximum speed calculation the effects of dynamic brakes, which cannot be relied upon to stop the train, resulted in speeds that violated the spirit of the "primary brake" and prevented the engineer from stopping the accident train with the air brakes alone.[51] The maximum authorized speed down 17-mile grade should probably have been no greater than 15 mph to ensure safe operation in the event of either partial or full dynamic brake failure or an unintended release of the air brake.

CSXT does actively update its train handling practices as train equipment improves. To a large extent, it does the updating by using computer simulators, such as a train dynamics analyzer. The analyzer is used to match methods of train handling with current and proposed maximum authorized speeds; however, no software is yet capable of replicating the loss of braking caused by heat fade. (Such software is under development.) Since a train dynamics analyzer cannot replicate heat fade, a simulator may indicate that a train can be stopped when, in reality, it may be unstoppable. Running an actual train on steep grades and applying the brakes until heat fade occurs is dangerous and expensive and is therefore not practical. The most available current methods of determining the maximum authorized speed are by calculation or by using dynamometers; however, most railroads use neither.

As already noted, the Safety Board has previously investigated runaway train accidents at San Bernardino and Kelso, California, involving the Southern Pacific and the Union Pacific Railroads. There have been similar incidents on the BNSF Railway on Cajon Pass. All these accidents and incidents involved, as does the Bloomington accident, the dependence on and sudden loss of dynamic braking. The Safety Board is concerned

[50] Unlike automobiles, a train can attain speeds, particularly when traveling downgrade, that exceed the capacity of the brakes to bring it to a stop.

[51] At the time of this report, the FRA had not cited CSXT for any rule violation regarding the maximum authorized speed in this accident.

that maximum authorized speeds enabling a train to stop by the air brake system alone are not, and have not been, audited or re-evaluated by the major carriers as frequently as necessary over time as trains have become heavier and braking systems have changed. Therefore, the Safety Board believes that the class I railroads should calculate steep-grade maximum authorized speeds to ensure that trains can be stopped by use of the air brake system alone. The Safety Board also believes all class I railroads should establish procedures to revise maximum authorized speeds as necessary.

CSXT Management Oversight

Given the circumstances at the time of the accident, including the maximum authorized speed and the absence of a method to warn the engineer that he did not have access to full dynamic braking, the engineer's actions did not cause or contribute to the accident. Without the added retardation afforded by full dynamic braking and given the magnitude of the difference in energy[52] between what was developed during the investigation as a maximum safe speed of 15 mph and the maximum authorized speed of 25, it is doubtful whether the engineer could have stopped the train regardless of what he did.

According to the dynamometer tests, the "point of no return" was around Swanton Flats, MP 219.4, only 3.6 miles down 17-mile grade, a point long before an engineer would normally be concerned about controlling or stopping the train. In fact, the engineer was concerned about stalling rather than stopping the train. Consequently, he powered against the brakes. The event recorder showed that the train's speed from MP 223 to MP 217.22 never exceeded the maximum authorized 25 mph; and yet, as confirmed by the dynamometer tests, the train became uncontrollable. The difference in energy is even greater at 30 mph, which was still within the allowable +5 mph margin of the operating rules at the time. Therefore, the Safety Board concludes that no matter what actions the engineer took, he probably could not have prevented a runaway because of the speed at which he was authorized to operate and the condition of the dynamic brakes.

Engineer's Actions

While the engineer's actions do not appear to have directly caused or contributed to the accident, some of his actions, or some of his failures to act, reflect upon the efficacy of his supervision, training, and support.

The engineer had more than 29 years of railroad experience at the time of the accident. He was well regarded by railroad management and coworkers as a "senior" engineer. He had been in engine service since 1976 and had made numerous runs along the Grafton to Cumberland route. He had come back to road service on January 9, 2000, a few weeks before the accident. He had just had his last rules class and test 3 days before the accident. He had completed 2 days of recertification[53] training (49 CFR Part 240) at the CSXT Training Center, Cumberland, Maryland, on May 4, 1999, which consisted of

[52] Energy as measured in bhp.

[53] Recertification is not the same as requalification.

classroom presentations and tests. And yet, in this accident, the engineer's train handling was not optimal.

Situational Awareness. According to FRA inspectors, CSXT operating officers, and CSXT engineers with knowledge of and experience with 17-mile grade, it is possible to control a loaded coal train headed by three modern locomotive units with a 12-pound or less brake pipe reduction and light throttle or dynamic brake modulation. Earlier in the trip, the helper engineer had noted that the train engineer had used more air brake than was normal or routine. The accident engineer stated several times that he attributed his use of more air brake than usual to the wet snow and icy rail; however, his need to power against a 17-pound reduction with up to a 6th notch of throttle belies this contention.

The engineer said he was afraid that the train would stall at Swanton Flats if he did not power against the brakes. Thus, he should have realized that the brakes were effective and not affected at that time by snow or ice. An engineer who was fully situationally aware and who understood the grade and the newer locomotives would likely have been aware that something was wrong long before the point where the train could not be controlled with customary train handling.

Powering Against the Brakes. As mentioned earlier, CSXT rules state, "When necessary to apply power descending long heavy grades, trains must not be pulled[54] for a distance greater than 2 miles if the brake pipe reduction is 18 pounds [psi] or greater."

According to the event recorder, the engineer had steadily increased the air brake application for more than 10 minutes, until he had a 17-pound reduction of the brake pipe[55] at MP 220.12 (Swanton) at a speed of 24 mph. He maintained the 17-pound reduction for the next 9 minutes at a speed of 24 mph. It is significant that he powered against this 17-pound reduction through Swanton for about 5 minutes and 2 miles, at one point reaching the 6th notch on the throttle. He further reduced the brake pipe to 18 pounds at MP 216.46 at a speed of 28 mph.

Thus the engineer had been operating at the limit or just short of the 18-pound limit, and the brakes had probably already reached the thermal point of no return at the speed the train was moving. He continued to make progressive 1-pound reductions for about the next 4 minutes as the speed of the train increased to 34 mph, when he finally placed the brakes in emergency. Had the engineer gone into emergency shortly after reaching the 18-pound reduction, as required by rule, he probably would not have been able to stop, since the train's brakes were probably already beyond the critical thermal limit.

The actions of the engineer, and the effects of those actions, point out a problem with the CSXT "18-pound" rule. As written, the rule is inadequate to ensure that an

[54] In order for the train to be pulled regardless of whether the train brakes are applied, the locomotives must be in the power mode.

[55] The brake pipe pressure is 90 psi minus the total reduction. In this case a 17-pound reduction will result in a brake pipe pressure of 73 psi.

engineer does not, as the accident engineer did, power against his brakes at a speed that is likely to cause excessive heat generation and loss of control. All the calculations for bhp are based on the factor of speed or velocity—the greater the speed, the greater the bhp and heat energy generated by the friction brakes. The CSXT rule does not include a critical limit for speed. The Safety Board concludes that, because the CSXT rule regarding powering against the brakes does not address train speed, it is inadequate to ensure that an engineer does not exceed the bhp and heat energy limitations of the tread brake system and thereby create conditions that can lead to a runaway train.

Therefore, the Safety Board believes that CSXT should modify CSXT Rule 3.3.7, *Speed Control on Descending Grade*, Paragraph C, "Use of Power on Heavy Descending Grades," to impose a speed limit in addition to the maximum distance and brake pipe reduction currently imposed to prevent excessive heat generation, heat fade, and loss of braking ability.

Engineer's Support and Training

The Safety Board examined the management and supervisory support the engineer received as well as and engineer's actions during the accident. The Safety Board also examined the effect that the CSXT locomotive engineer training and the recertification program might have had on those actions. Since the engineer had become an engineer in 1976, his most recent training was considered.

The engineer said that he had transferred from a yard to a road assignment only a few weeks before the derailment. Consequently, the general road foreman told the engineer that he could have a pilot for two roundtrips. For the engineer's first trip on the assignment, a pilot was provided for the westbound leg, from Cumberland to Grafton (uphill, in the opposite direction of the accident train). Because the crew returned to Cumberland by taxi, the engineer did not make an eastbound trip (which would have taken him down 17-mile grade) with the pilot.

The engineer said that when he was called for his second trip, he asked that a pilot accompany him on the return to Cumberland. But, he said, a crew caller told him that the crew caller and the lead crew caller would decide whether the engineer needed a pilot and, if so, would provide one. No pilot was provided.

Additionally, according to the engineer and to CSXT records, no supervisor had ridden with the engineer while he operated a train down 17-mile grade to monitor his performance or to provide specific train handling instruction and guidance, even though this area was a critical train handling portion of the railroad. And while the engineer had made one trip down the grade as an observer and had operated a train on eight trips down 17-mile grade in the weeks preceding the accident (most of them with loaded coal trains), neither he nor his supervisors could know for certain whether his train handling technique was appropriate or whether it offered some safety margin in case of an unforeseen event.

Use of End-of-Train Emergency Switch

After the engineer placed the train brakes in emergency with the automatic brake handle, he did not confirm that the emergency application had propagated to the end of the train until a minute and a half later when he saw the head-end display showing 0 psi pressure for the train's EOT. Had he activated the EOT emergency brake application switch immediately after initiating the emergency application, he would have ensured that the emergency application had reached the end of the train.

Immediately throwing the EOT switch not only propagates the brake application more rapidly because the release of air pressure comes from both ends of the train rather than just the head end, but it also ensures full propagation even if a kink or other obstruction is blocking the train line. Thus, the prudent action would have been to immediately flip the EOT emergency brake switch. The needless time taken to confirm that the emergency propagation was complete could, under some circumstances, have been critical. In this case, because the engineer had already exceeded the thermal limit of the brakes by the time he placed the brakes in emergency, his failure to immediately initiate an EOT emergency application became moot.

The engineer said he had been trained to use the two-way EOT emergency switch only if the EOT was not showing 0 psi after an emergency brake application. Since using the switch causes no damage to any equipment on the train while offering the advantages of a quicker and more thorough response, the Safety Board fails to see the benefit in restricting its use to what is, in effect, a backup system. CSXT agrees and has an automatic two-way emergency EOT switch on all new locomotives. In addition, CSXT offers instruction in the use of the switch in its engineer classes and, in its operating rules, requires immediate use of the switch in an emergency.

Emergency Radio Use

During the runaway, the train crew was unable to contact the dispatcher but was able to contact the railroad operator at West Keyser, Virginia, as the train passed Bond at MP 212.6. The engineer attributed his inability to contact the dispatcher to the fact that the radio on the ex-Conrail lead locomotive was different from the radios found on the CSXT locomotives that he more commonly operated. Postaccident testing of the engineer's radio and subsequent investigation revealed that the radio worked as designed.

U.S. railroads use five basic styles of locomotive radios, each of which is compatible with the others, regardless of railroad. Except for superficial details such as dials, touch pads, and channel display, all railroad radios are similar; that is, they use the same frequencies or channels. Timetable instructions list the particular channels for emergency use and/or for calls to the dispatcher. Had the engineer properly set the channel for the dispatcher and then pushed the correct keypad number—either "9" for emergency or "5" for the dispatcher—he would have reached the dispatcher.

The Safety Board concludes that CSXT failed to train and oversee the engineer sufficiently and effectively, as evidenced by (1) management's failure to provide the engineer with a pilot when requested, (2) management's failure to fully evaluate the

engineer over the critical portion of the railroad where the accident took place, (3) the engineer's failure to use the EOT emergency brake switch, (4) the engineer's imprudent use of power during brake application, and (5) the engineer's reported inability to use the radio to contact the dispatcher. Therefore, the Safety Board believes that CSXT management should systematically ensure that engineers are provided with pilots, as appropriate, and that locomotive engineers are fully evaluated over the whole of their territories, particularly in critical areas of train handling such as steep grades.

The Safety Board also believes that CSXT should revise its locomotive engineer training and requalification programs as necessary to ensure that they address (1) the emergency use of the two-way EOT emergency switch, (2) the proper use of power during a brake application to prevent heat fade and loss of braking, and (3) the use of all styles of locomotive radios, especially their use during emergency situations to call the dispatcher.

Conclusions

Findings

1. There was no evidence that the following factors were causal or contributory to the accident: the weather; crewmember fatigue, or alcohol or drug use of any kind.

2. Neither the signal and train control systems nor the track conditions were factors in the accident.

3. The train's air braking system did not cause or contribute to the accident.

4. By using the effects of dynamic braking in its speed calculations, CSX Transportation established a maximum authorized speed over and down 17-mile grade that was too high to ensure that heavily loaded trains could be stopped using air brakes alone.

5. No matter what actions the engineer took, he probably could not have prevented a runaway because of the speed at which he was authorized to operate and the condition of the dynamic brakes.

6. If all the available dynamic braking could have been activated on the accident train, the derailment probably would not have occurred.

7. Because the CSX Transportation rule regarding powering against the brakes does not address train speed, it is inadequate to ensure that an engineer does not exceed the braking horsepower and heat energy limitations of the tread brake system and thereby create conditions that can lead to a runaway train.

8. CSX Transportation management failed to train and oversee the engineer sufficiently and effectively, as evidenced by (1) management's failure to provide the engineer with a pilot when requested, (2) management's failure to fully evaluate the engineer over the critical portion of the railroad where the accident took place, (3) the engineer's failure to use the end-of-train emergency brake switch, (4) the engineer's imprudent use of power during brake application, and (5) the engineer's reported inability to use the radio to contact the dispatcher.

Probable Cause

The National Transportation Safety Board determines that the probable cause of the January 30, 2000, derailment of CSX Transportation train V986-26 near Bloomington, Maryland, was the railroad's practice of including dynamic braking in determining maximum authorized speed without providing the engineer with real-time information on the status of the dynamic braking system.

Recommendations

As a result of its investigation of the January 30, 2000, derailment of CSXT train V986-26 near Bloomington, Maryland, the National Transportation Safety Board makes the following safety recommendations:

To CSX Transportation, Inc.:

Systematically ensure that engineers are provided with pilots as appropriate and that locomotive engineers are fully evaluated over the whole of their territories, particularly in critical areas of train handling such as steep grades. (R-02-8)

Revise your locomotive engineer training and requalification programs as necessary to ensure that they address (1) the emergency use of the two-way end-of-train emergency switch, (2) the proper use of power during a brake application to prevent heat fade and loss of braking, and (3) the use of all styles of locomotive radios, especially their use during emergency situations to call the dispatcher. (R-02-9)

Modify CSX Transportation Rule 3.3.7, *Speed Control on Descending Grade*, Paragraph C, "Use of Power on Heavy Descending Grades," to impose a speed limit in addition to the maximum distance and brake pipe reduction currently imposed to prevent excessive heat generation, heat fade, and loss of braking ability. (R-0-10)

To all class I railroads:

Calculate and document steep-grade maximum authorized speeds to ensure that trains can be stopped by use of the air brake system alone. (R-02-11)

Establish procedures to revise steep-grade maximum authorized speeds as necessary. (R-02-12)

BY THE NATIONAL TRANSPORTATION SAFETY BOARD

MARION C. BLAKEY
Chairman

CAROL J. CARMODY
Vice Chairman

JOHN A. HAMMERSCHMIDT
Member

JOHN J. GOGLIA
Member

GEORGE W. BLACK, JR.
Member

Adopted: March 5, 2002

Appendix A

Investigation

The National Transportation Safety Board Communications Center was notified of the derailment at Bloomington, Maryland, about 8 a.m. on January 30, 2000, and two Safety Board investigators were launched to Bloomington, arriving on scene about 11:00 a.m. No Board Member went to the scene.

No public hearing was held on this accident. Testimony was taken in Grafton, West Virginia, immediately after the accident on February 1, 2000. Follow-up testimony was taken in Jacksonville, Florida, at CSXT headquarters on November 8, 2000, and in Cumberland, Maryland, on November 28, 2000.

Load-cell brake shoe measurements were performed at the CSXT car shop in Cumberland, Maryland, on August 8 and 9, 2000.

On August 22, 2000, representatives of parties to the accident gathered at the Railroad Friction Products Corporation plant at Maxton (Laurinburg), North Carolina, where a dynamometer machine tested brake shoes under the accident conditions.

this page intentionally left blank

Appendix B

How Freight Train Air Brakes Work

The air brake system on a train is designed to slow or stop a train through the use of compressed air. The compressed air is used to push a piston within a cylinder. Usually, through a series of rods and levers, the piston's movement forces brake shoes against car or locomotive wheels or discs to slow their rotation through friction. The air is compressed by an air compressor in the locomotive and stored for use in the main reservoirs (large tanks) on the locomotive. (See diagram that follows.)

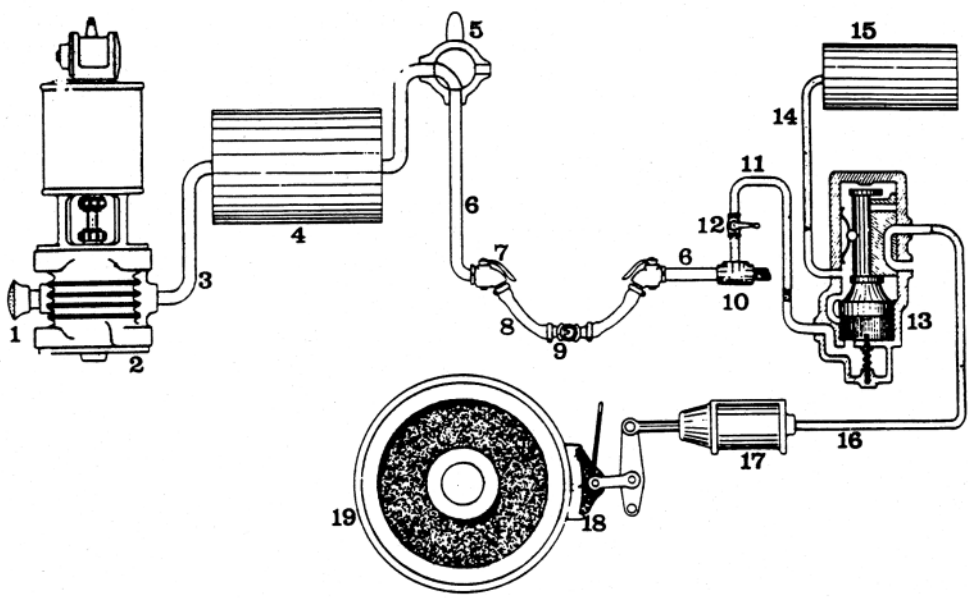

1. Air Intake Filter
2. Air Compressor
3. Main Reservoir Pipe
4. Main Reservoir
5. Engineer's Brake Valve
6. Brake Pipe
7. Angle Cock
8. Air Brake Hose
9. Hose Coupling
10. Branch Pipe Tee
11. Branch Pipe
12. Cutout Cock
13. Triple Valve
14. Auxiliary Reservoir Pipe
15. Auxiliary Reservoir
16. Brake Cylinder Pipe
17. Brake Cylinder
18. Brake Shoe
19. Wheel

Figure 1. Brake Diagram

The compressed air and the brakes are controlled by the engineer using an automatic brake-valve handle on a locomotive control stand. The automatic brake valve controls the train's brakes (including the locomotive's brakes) and has three functions: (1) to apply the brakes, (2) to release the brakes, and (3) to charge or recharge the air brake system. Another valve handle, called the independent brake valve, is used by the engineer to independently control only the locomotive's brakes.

Each railroad car has one or more brake-cylinder pistons, a reservoir (storage tank), associated piping, and a control valve. The control valves on cars are designed to respond to changes in air pressure in the train line. The train line is the physical connection of the locomotive and the cars' air brake systems through metal pipes and connecting flexible air hoses at the ends of each railroad vehicle.

The air pressure within the train line is called the brake pipe. When brake pipe pressure (in the train line) is reduced by the engineer, each car's control valve senses the drop and applies the brakes by sending some air stored in the car's reservoir to its brake cylinder(s). The amount of air sent to the air brake cylinder is proportional to the drop in brake pipe pressure. Up to a point, the larger the drop in brake pipe pressure, the more air the control valve sends from the reservoir to the brake cylinder and the greater the amount of braking force created.

To release the brakes, the engineer lets more air into the train line from the locomotive main reservoirs, increasing the brake pipe pressure. Each car's control valve senses this increase in air pressure and exhausts air from the brake cylinder, releasing the brakes. A return spring within the brake cylinder pushes the piston back into the cylinder, and the brake shoe backs away from the wheel or disc. At the same time, the car's control valve takes some air from the train line to replenish any air that the car's braking system has used from its reservoir to charge or recharge its system.

The brake-pipe pressure is determined by the engineer, who turns a knob that sets the regulating or feed valve. The regulating valve reduces the pressurized air from the main reservoir to a determined amount for delivery to the equalizing reservoir, which then dictates brake pipe pressure. The equalizing reservoir is a small reference volume used to control the much larger brake pipe or train line volume. The equalizing reservoir allows the engineer to make immediate predetermined changes to the brake-pipe pressure without having to wait for the changes to take place in the train and stabilize.

Since the train line connections through and between cars are not perfect, some of the compressed air leaks out of the system. In order to prevent the car control valves from sensing a drop in air pressure from leakage and inadvertently applying the brakes, the automatic brake valve in the engineer's locomotive control stand has a maintaining feature. The maintaining feature automatically sends just the right amount of air into the brake pipe, regardless of whether the brakes are applied or released, to make up for any train line system leakage.

Since the maintaining feature is located in the locomotive, there is usually a constant flow of air toward the rear of the train. Train line leakage progressively draws off air from the brake pipe as it travels toward the rear of the train, dropping air pressure. This gradual drop in brake pipe pressure is called gradient, and represents the difference in brake pipe pressure between the front of the train and the rear of the train.