APPENDIX E

Engine Pylon Diagram

NTSB Airplane Accident Case No. DCA00MA006
60 miles south of Nantucket, Massachusetts
October 31, 1999
Boeing 767-366, Su-GAP

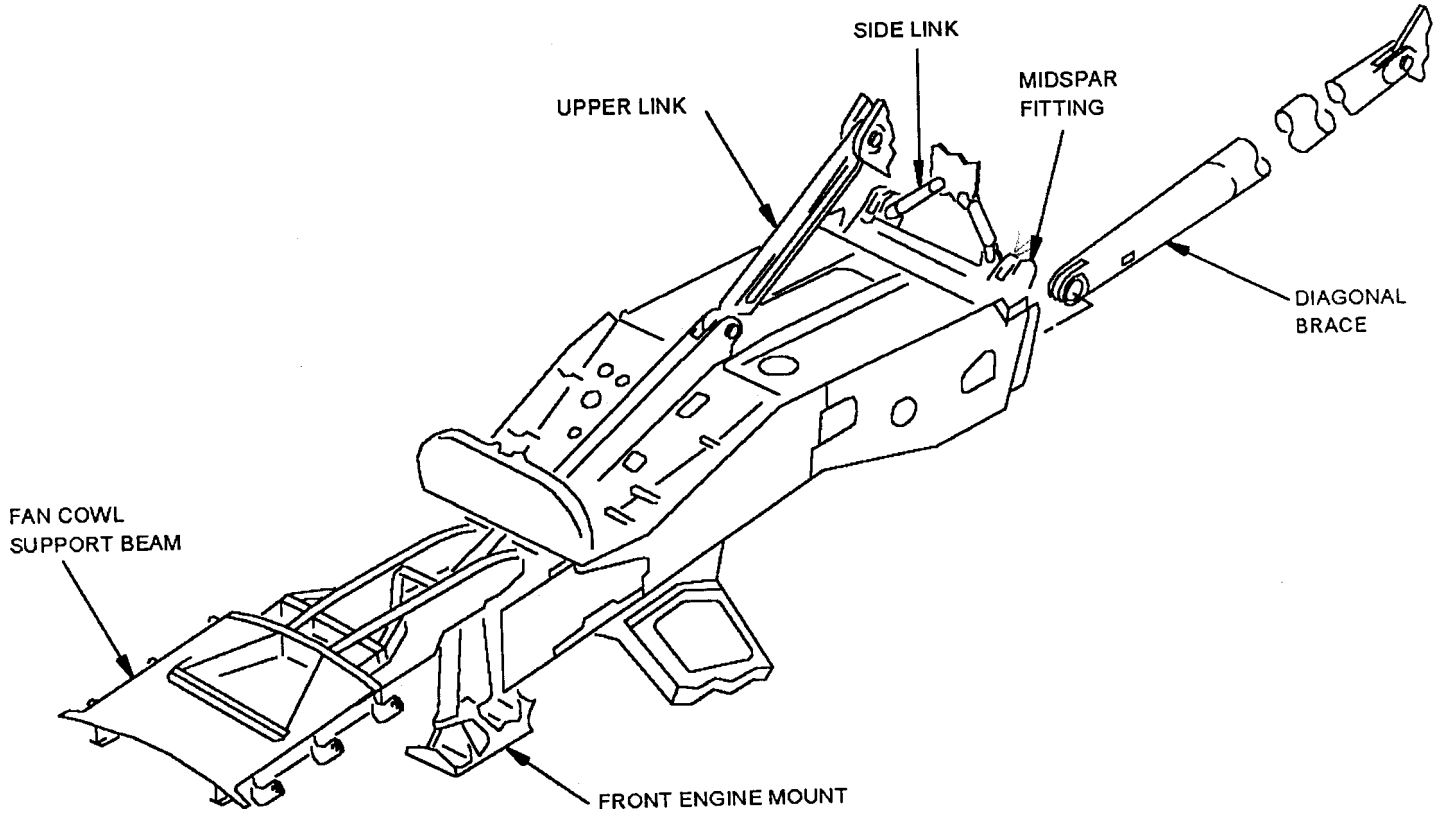

Figure 1. Engine Pylon Diagram