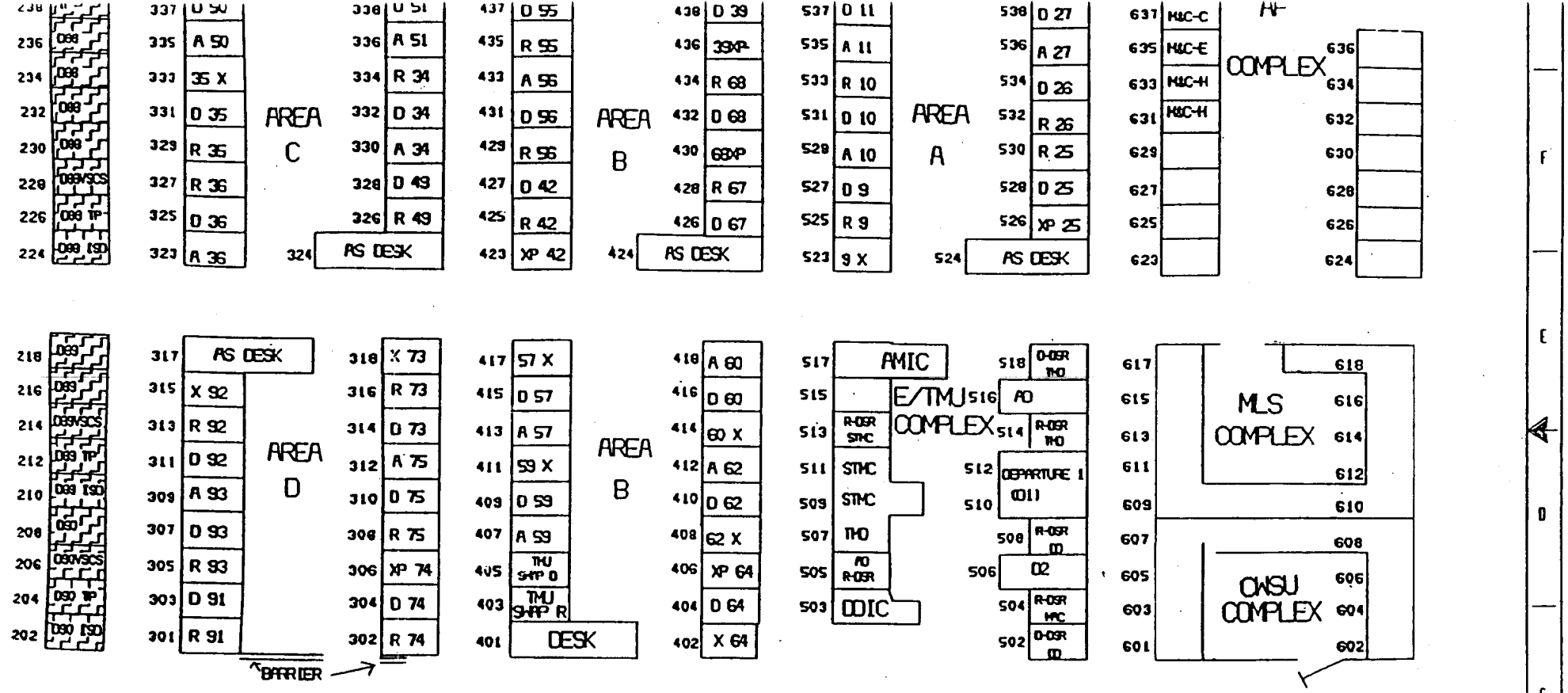

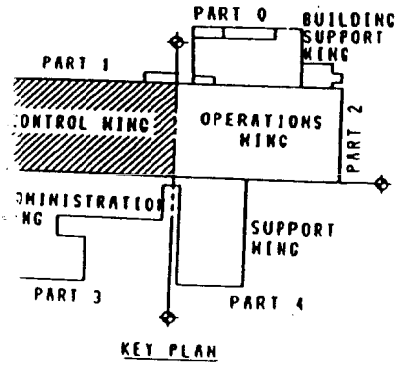

ZNY-1		3/5/99
AFSSC-811		
ZNY-3	for	2/24/99
NATCA		2-24-99
PASS		3/5/99

DEPARTMENT OF TRANSPORTATION
FEDERAL AVIATION ADMINISTRATION
WASHINGTON, D.C. 20591

NEW YORK CENTER CONTROL WING

DESIGNED BY	ISSUED BY	DATE 2/23/99	REV. LTR.
DRAWN BY	ZNY-530	DRAWING NO. DSRR1FINAL.DG	C
CHECKED BY			

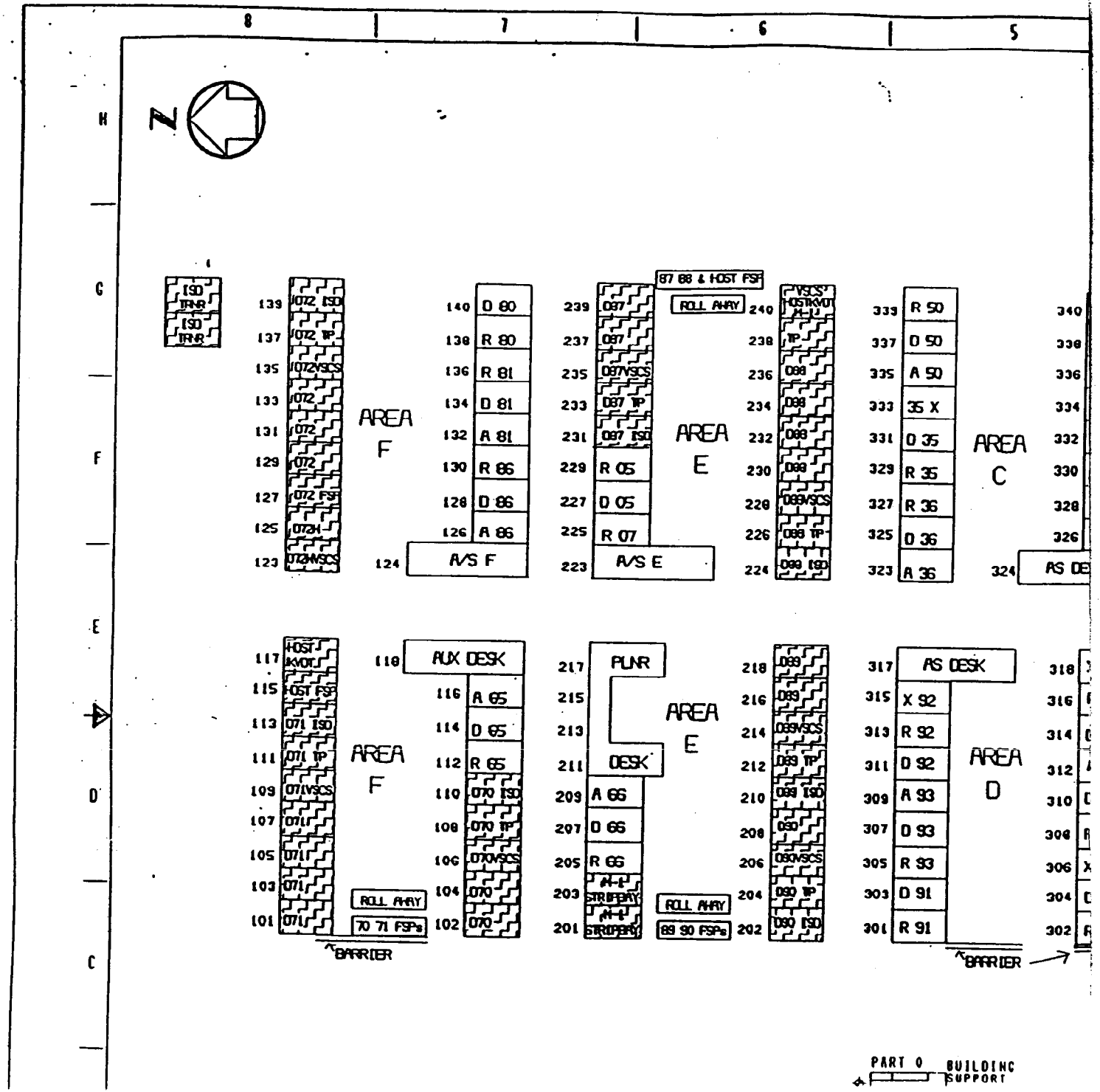
8
7
6
5
H
G
F
E
D
C
N
ISD TRNR
ISD TRNR
139 072 ISD
137 072 TP
135 072VSCS
133 072
131 072
129 072
127 072 FSP
125 072H
123 072VSCS
AREA F
140 D 80
138 R 80
136 R 81
134 D 81
132 A 81
130 R 86
128 D 86
126 A 86
124 A/S F
239 087
237 087
235 087VSCS
233 087 TP
231 087 ISD
229 R 05
227 D 05
225 R 07
223 A/S E
87 88 & HOST FSP
ROLL AWAY
AREA E
240 VSCS HOST KVOT
238 TP
236 088
234 088
232 088
230 088
228 088VSCS
226 088 TP
224 088 ISD
333 R 50
331 D 50
329 A 50
327 35 X
325 D 35
323 R 35
R 36
D 36
A 36
AREA C
340
338
336
334
332
330
328
326
324 AS DE
117 HOST KVOT
115 HOST FSP
113 071 ISD
111 071 TP
109 071VSCS
107 071
105 071
103 071
101 071
AREA F
ROLL AWAY
70 71 FSPs
BARRIER
110 AUX DESK
116 A 65
114 D 65
112 R 65
110 070 ISD
108 070 TP
106 070VSCS
104 070
102 070
217 PLNR
215
213
211 DESK
209 A 66
207 D 66
205 R 66
203 STRIPERY
201 STRIPERY
AREA E
ROLL AWAY
89 90 FSPs
218 089
216 089
214 089VSCS
212 089 TP
210 089 ISD
208 090
206 090VSCS
204 090 TP
202 090 ISD
317 AS DESK
315 X 92
313 R 92
311 D 92
309 A 93
307 D 93
305 R 93
303 D 91
301 R 91
AREA D
BARRIER
318
316
314
312
310
308
306
304
302
PART 0 BUILDING SUPPORT