Log: 1+-613

SR

National Transportation Safety Board

Washington, D.C. 20594

Safety Recommendation

Date: MAR 2 7 2001

In reply refer to: H-01-01

Mr. Robert Shelton
Executive Director
National Highway Traffic Safety Administration
400 Seventh Street, S.W.
Washington, D.C. 20590

In this letter, the National Transportation Safety Board recommends that action be taken to address a safety issue concerning the use of automatic brake adjusters in air-braked commercial vehicles, particularly the use of Haldex Brake Products Corporation (Haldex) automatic brake adjusters with failed control arms. The control arm design is essentially unique to Haldex. The Safety Board identified the issue during its investigation of a fatal accident involving a motorcoach. Safety Board investigators analyzed the dynamics of the accident through computer simulations. Although brake performance was not determined to be a causal factor in the accident, the performance of the automatic brake adjuster could have implications for other highway accidents. As a result, the Safety Board has issued five safety recommendations, one of which is addressed to the National Highway Traffic Safety Administration. Information supporting the recommendations is discussed below.

On December 24, 1998, about 10:35 a.m., eastern standard time, a 1992 Van Hool N.V. coach bus, operated by Bruins Transportation of Brooklyn, New York, was southbound on the Garden State Parkway near Old Bridge, New Jersey. The bus, which was carrying 22 passengers, was on a regular route from New York City to casinos in Atlantic City, New Jersey. According to police, the road was wet, and the temperature was close to freezing. When the busdriver tried to move to the left lane, he later said, he lost control. The bus rotated counterclockwise, departed the left side of the roadway, and overturned into an earthen ravine. Eight passengers were killed; the driver and 14 passengers were seriously injured.

The bus had automatic brake adjusters, also known as automatic slack adjusters. Slack adjusters, which link the air brake chamber to the service brake, adjust brakes as necessary to compensate for wear in the brake lining. Manual slack adjusters must be adjusted periodically by hand; automatic slack adjusters adjust automatically while the vehicle is in operation.

Figure 1 illustrates the automatic slack adjuster, which was manufactured by Haldex, on the accident bus. Figure 2 illustrates the relationship of a slack adjuster to the rest of the foundation brake system.[1]

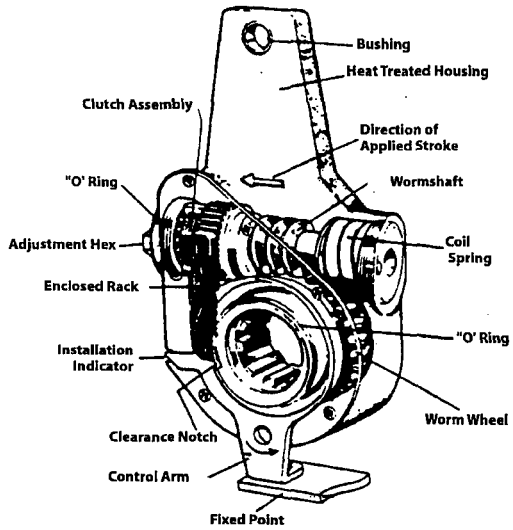

Figure 1. Automatic slack adjuster.

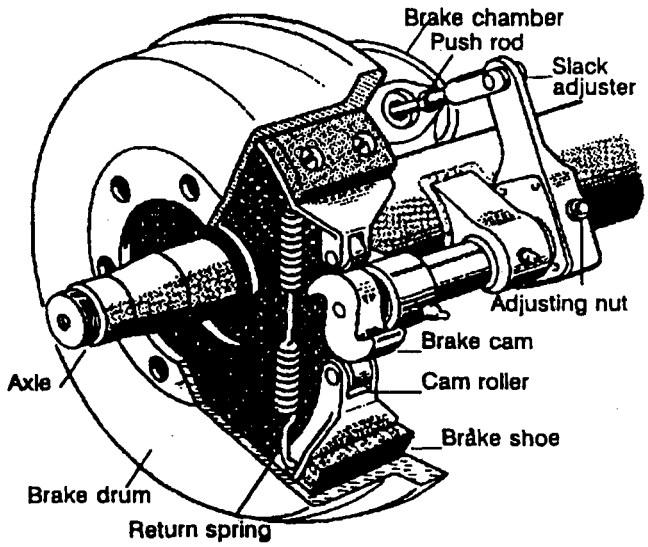

Figure 2. Foundation brake system.

[1] Air pressure from the brake chamber exerts force on the push rod. The push rod, through the slack adjuster, uses the force to rotate the brake cam shaft. The brake cam forces the shoes away from one another, pressing them against the inside of the brake drum.

Even though the accident vehicle had automatic slack adjusters, the postaccident inspection revealed a significant difference between the adjustment of the right- and left-side brakes on the drive axle. The right-side brake was grossly out of adjustment. The right brake shoes had only minimal contact with the drum. (An out-of-adjustment brake increases stopping distance and can cause a bus to rotate if the bus is suddenly braked.) The left-side brake was properly adjusted. Such a disparity was particularly surprising in this case because the brakes of the vehicle had been maintained and inspected less than a month before the accident.

Further examination of the right-side slack adjustment hardware revealed that the control arm had fractured. The pieces of the control arm were still in contact with each other, constraining the motion of the arm. Although investigators could not determine when the fracture had occurred, the wear pattern suggested that the fracture had been present for some time.

When an automatic slack adjuster has a fractured control arm, the adjuster no longer works automatically; it, like a manual slack adjuster, then requires periodic adjustment by hand. However, the adjustment of the right-rear brake on the accident bus had degraded much more rapidly than would be expected with a manual slack adjuster.

Safety Board investigators conducted follow-up testing at the Haldex corporate facility in Grain Valley, Missouri, to determine how a Haldex automatic slack adjuster performs when its control arm has failed. The investigators tested the right- and left-side slack adjusters from the accident bus. In addition, they tested a small sample of new and used Haldex slack adjusters.

The test fixture was configured to be similar to the axle on the accident bus and on other air-braked commercial vehicles. The control arm was detached and the slack adjusters were cycled, as they would be in normal service, with varying air application pressures. The investigators monitored the clearance between the brake lining and brake drum to gauge the level of brake adjustment. They also monitored push-rod stroke, a measure of brake adjustment, and performed numerous repetitive brake applications.

The investigators found that when the control arm is detached from an automatic slack adjuster:

1. Push-rod stroke increases with repetitive brake applications.

2. The rate of stroke increase is greatest when the application air pressures are higher, the application and release times are faster, the control arm is constrained in motion (as on the accident bus), and the internal spring force in the automatic slack adjuster has deteriorated.

These test results are of concern since frequent brake applications and the high air-pressure rapid cycling with antilock brake systems are common real-world conditions. Similarly, a fractured control arm could constrain motion at the fracture plane of the control arm. Additionally, the internal spring force on the Haldex adjuster could be modified in field service or could deteriorate over time due to fatigue. These conditions, in the event of a control arm failure, could lead to a loss of brake performance at the affected wheel.

The Haldex automatic slack adjuster has been used for over 10 years on a variety of commercial vehicles with air brakes. Through industry contacts, Safety Board staff understands that fractured control arms are often replaced as maintenance items. The Safety Board has not identified instances of such fractures in previous investigations, and how often control arms have failed or contributed to accidents is not known. In many situations, the failure of a control arm is not readily apparent. However, the Safety Board uncovered this problem in this investigation, duplicated the discrepancy during testing of the accident bus, and observed similar problems with other Haldex automatic slack adjusters that it tested.

Therefore, the Safety Board is concerned about brake deadjustment, which is an acceleration of the rate at which a brake system goes out of adjustment, that can affect Haldex slack adjuster assemblies when the control arm is broken or disconnected. Consequently, the Board believes that Haldex should determine how to prevent brake deadjustment caused by a fractured or disconnected control arm, distribute service advisories notifying users of this danger, and take appropriate measures to prevent brake deadjustment.

In 1992, the Safety Board issued a study[2] that evaluated the effectiveness of air brake systems on large commercial trucks and buses. The data highlighted several problems. The most significant problem was the difficulty of keeping the air brakes of commercial vehicles properly adjusted. About 46 percent of the 1,520 large trucks inspected jointly by the Safety Board and the States were removed from service because their brakes were poorly adjusted.

As a result of the study, the Safety Board issued Safety Recommendation H-92-51 to the U.S. Department of Transportation. The recommendation asked the agency to expedite adopting a requirement that newly manufactured commercial vehicles with air brakes have automatic slack adjusters. The National Highway Traffic Safety Administration issued a final rule requiring the installation of such adjusters; as a result, on October 19, 1992, the Board classified Safety Recommendation H-92-51 "Closed—Acceptable Action." Although the Safety Board recognizes that automatic slack adjusters for commercial vehicles are a significant safety improvement, this accident demonstrates that the adjusters may not be fail-safe. Therefore, the Safety Board believes that the National Highway Traffic Safety Administration should monitor the progress of Haldex in correcting the brake deadjustment caused by a fractured or disconnected control arm and ensure that Haldex takes appropriate corrective action.

Since rapid brake deadjustment can occur when the control arm is fractured or disconnected, the Safety Board is concerned that the commercial vehicle industry and safety inspectors need to be alerted to this safety problem. This bus had received recent inspections; however, the failed control arm was not noticed. Because of the location of automatic slack adjusters, especially on motorcoaches, inspectors have difficulty observing the control arm. Therefore, the Board believes that the American Trucking Associations, Inc., through its Maintenance Council; the American Bus Association; and the United Motorcoach Association should urge their member companies, and the Federal Motor Carrier Safety Administration should advise all vehicle inspection personnel, to inspect all vehicles with automatic slack adjusters for fractured or disconnected control arms and inform them of the circumstances of this

---

[2] See National Transportation Safety Board, *Heavy Vehicle Airbrake Performance, April 29, 1992,* Highway Safety Study NTSB/SS-92/01 (Washington, DC: NTSB, 1992).

accident; the Commercial Vehicle Safety Alliance should also provide this advice and information to all State and local inspectors of commercial vehicles.[3]

As a result of its investigation, the National Transportation Safety Board makes the following safety recommendation to the National Highway Traffic Safety Administration:

> Monitor the progress of Haldex Brake Products Corporation in correcting the brake deadjustment caused by a fractured or disconnected control arm and ensure that Haldex takes appropriate corrective action. (H-01-01)

The Safety Board also issued safety recommendations to the Federal Motor Carrier Safety Administration; the Haldex Brake Products Corporation; the Maintenance Council of the American Trucking Associations, Inc.; the American Bus Association; the United Motorcoach Association; and the Commercial Vehicle Safety Alliance.

Please refer to Safety Recommendation H-01-01 in your reply. If you need additional information, you may call (202) 314-6170.

Acting Chairman CARMODY and Members HAMMERSCHMIDT, GOGLIA, and BLACK concurred in this recommendation.

By: Carol J. Carmody
Acting Chairman

Enclosure

[3] Enclosed is a copy of relevant sections from the group chairman's factual report of this accident.

Old Bridge, New Jersey, Vehicle Rollover
December 24, 1998

Vehicle Group Chairman's Factual Report
(Excerpts)

NATIONAL TRANSPORTATION SAFETY BOARD

Office of Highway Safety
Investigations Division
Washington, D.C. 20595

VEHICLE GROUP FACTUAL REPORT — HWY-99-M-H007

A. ACCIDENT INFORMATION

Investigation No.	: HWY-99-M-H007
Accident Type	: Single Vehicle Rollover
Accident Location	: Garden State Parkway, M.P. 123.8 Sayreville, NJ
Date and Time	: December 24, 1998, 10:35 a.m. Local Time
Ambient Conditions	: Earlier Snow / Ice
Vehicle	: 1992 VanHool Coach Bus

B. VEHICLE GROUP MEMBERS

Group Chairman — Christopher C Voeglie, Highway Accident Investigator
National Transportation Safety Board, OHS
2001 Route 46, Suite 504
Parsippany, NJ 07054
(973) 334-6468; Fax (973) 334-6759

Group Member — Sgt. John Herman; Trooper I, Joseph Duble
New Jersey State Police
Commercial Carrier Safety Inspection Unit
PO Box 7068, West Trenton, NJ 08628
(609) 882-2000 ext. 2998; (609) 351-9118
Fax (609)-883-1591

Group Member	Darrell L. Ruban, Special Agent, Crash Prgm Mgr. U.S. Department of Transportation, OMC 840 Bear Tavern Road, Suite 310 West Trenton, NJ 08628-1019 609-637-4222, Fax (609) 538-4913
Group Member	Ira Schaffer, Intermodal Transportation Specialist New York State Department of Transportation, Region II Motor Carrier Safety Bureau Hunters Point Plaza, Room 714 47-40 21st Street Long Island City, NY 11101 718-482-4754, Fax (718) 482-4746
Group Member	Kevin Mc Laughlin, Regional Technician ABC Coach New Jersey, for VanHool Inc. 1494 Federal Street Camden, NJ 08105 800-222-2873, Pgr. 800-526-9478, Fax (609) 966-0055

C. ACCIDENT SUMMARY

On December 24, 1998, at about 10:35 a.m., eastern standard time, a 1992 VanHool coach bus, operated by Bruins Transportation of Brooklyn, NY, was southbound on the New Jersey Garden State Parkway near Old Bridge, NJ. The bus, carrying 22 passengers, was on a regular route from New York, NY to the casinos in Atlantic City, NJ. As the bus passed the Cheesequake Service Area of the Parkway, the driver reportedly attempted a lane change to his left and lost control. The bus rotated counter-clockwise, departed the left side of the roadway near milepost 123.8, and overturned into an earthen ravine.

Eight passengers were fatally injured. The driver and 14 passengers received moderate to severe injuries and were transported to area hospitals by ground and air rescue transportation. Several hours before the accident, weather conditions were reported as snowing with freezing temperatures.

D. VEHICLE INFORMATION

Year	: 1992
Make	: VanHool
Model	: T-800, 49 Passenger Motorcoach
VIN	: YE2TA72BXN2021747
Registration	: BE2383 - NY
Owner	: Bruins Transportation Corporation
Fleet Unit No.	: 843
US DOT No.	: 524667
NY DOT No.	: 32047
ICC No.	: MC263915
Engine Model	: Cummins Diesel, L10 300
Axle Ratio	: 3.31:1
Wheelbase	: 274.89 inch / 12,355 mm
Transmission	: Allison, 5-speed automatic
Trans. Model	: Model HT 754CR
Front GAWR	: 14,325 lbs.
Drive GAWR	: 19,410 lbs.
Tag GAWR	: 9,265 lbs.
GVWR	: 43,000 lbs.

E. SAFETY BOARD VEHICLE INSPECTIONS

The vehicle group performed general and mechanical inspections of the Bruins motorcoach (coach) on December 26, 1998 through December 31, 1998, and during the week of January 4, 1999. Inspections were conducted at the Super Service Bus Company, also known as Stellmaszek & Sons Incorporated, located at 7061 Route 35, South Amboy, New Jersey.

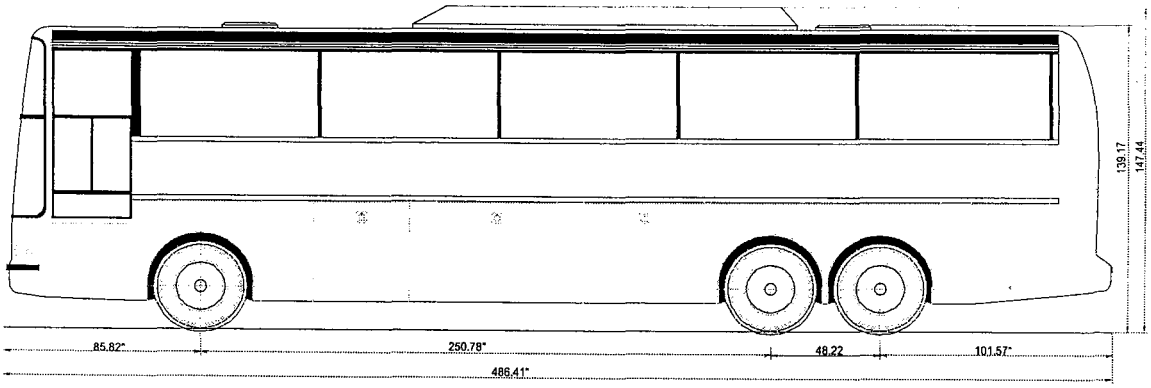

Power Train - The 1992 VanHool coach bus, production number 21747, fleet number 843 was leased and operated by the Bruins Transportation Corporation (carrier), located at 119 Alabama Avenue, Brooklyn, New York. The coach was equipped with a Cummins L-10, 300, mechanically controlled diesel engine that was equipped with an exhaust brake. The coach was equipped with an Allison, Model HT 754CR, 5-speed automatic transmission with an overall final drive ratio of 1:1, an Eaton dual wheel drive axle with a 19,410 pound gross axle weight rating and a 3.31:1 gear ratio.

Tire & Wheel Assemblies - The three-axle coach had eight tires; two on the first axle (steering axle), four tires on the second axle (drive axle) and two tires on the third axle (tag axle). Tire makes, models, tread depths and air pressures were documented. All of the coach tires were mounted on 22.5 inch steel wheel assemblies. No visible damage was observed to the tires or wheel assemblies. The coach's post-accident

axle weights were also obtained. Following is a table of the documented tire and axle weight information.

COACH TIRE INSPECTIONS					
AXLE	Manufacturer	Model	Size	PSI	Tread Depth
1-L	Firestone	HP 3000 LP	315/80 R22.5	Deflated	15/32
1-R	Firestone	HP 3000 LP	315/80 R22.5	12	15/32
2-L-I	Firestone	HP 3000 LP	315/80 R22.5	90	12/32
2-L-O	Firestone	HP 3000 LP	315/80 R22.5	95	15/32
2-R-I	Firestone	HP 3000 LP	315/80 R22.5	95	17/32
2-R-O	Firestone	HP 3000 LP	315/80 R22.5	62	17/32
3-L	Firestone	HP 3000 LP	315/80 R22.5	86	13/32
3-R	Firestone	HP 3000 LP	315/80 R22.5	80	12/32

POST ACCIDENT AXLE WEIGHTS				
	Axle No. 1	Axle No. 2	Axle No. 3	Total
Left Side Weight	4,600	6,860	3,420	14,880
Right Side Weight	2,980	7,420	3,060	13,460
Total Axle	7,580	14,280	6,480	28,340

Brakes - The accident coach was equipped with a combination of S-cam air mechanical brakes and air mechanical wedge brakes. The coach's front axle was configured with 15" X 7" dual chamber air mechanical wedge brakes, with "clamp type 9" service brake actuators and 12-degree angled wedge assemblies. The drive axle was configured with 16.5" X 8.625" S-cam air mechanical brakes with Bendix "K Series, Type 30" piston style spring brake actuators. The tag axle was equipped with wedge air mechanical brakes with a single "clamp type 9" service brake actuator and a 12-degree angled wedge assembly.

The air brake system was equipped with six individual steel reservoir tanks with a separate air tank for each of the following systems: wet tank, front axle, drive axle, tag axle, auxiliary park release and air powered accessories. All air reservoir tanks were drained for the presence of contaminants in accordance with the manufacturer's recommended sequence. "Air down" procedures indicated proper check valve operation, and the presence of contaminants was unremarkable.

The coach was equipped with an auxiliary emergency/parking brake release system. The system was designed to allow for the momentary release of the emergency, or parking brake while the dash-mounted "Bendix RD-3" push type control valve would be depressed. Emergency/parking brake activation was observed as the air system pressure dropped to approximately 55 pounds per square inch, and the emergency/parking brake's "Bendix PP-1" control valve released, indicating a functioning low air/emergency brake system. A "low air" warning device test was not conducted due to the coach's post accident condition, which presented a potential electrical fire hazard.

Brake inspection applications were made using 100 pounds per square inch of externally supplied and regulated air, which was plumbed into the discharge line of the coach's air compressor. Air compressor governor cut out and drier purge operation was observed at 125 psi.

Defects - During Safety Board brake inspections, the brake pedal was found unsecure. The roll pin, which functioned to secure the fulcrum or treadle pin, through the foot pedal and floor mounting plate, was sheared off with a portion of the roll pin remaining in the guide hole of the treadle pin. At the time of inspection, it was observed that the treadle pin had been inserted into the mounting plate backwards. With the roll pin absent, and the treadle pin inserted backwards, the treadle pin was not secured in the mounting bracket.

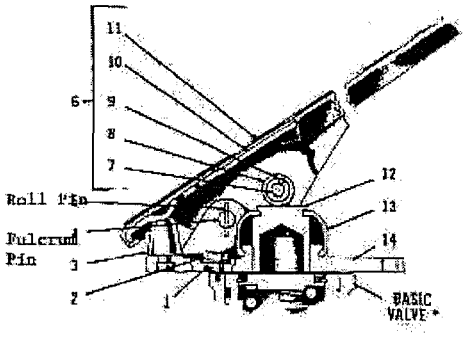

E-10 DUAL BRAKE VALVE
WITH TREADLE AND MOUNTING PLATE

The right front upper brake lining was found to be in contact with the brake drum while the brakes were released, causing the brakes to drag. The lower lining assembly possessed a small crack, which did not extend to a fastening device and was found to operate properly, and was in proper adjustment. The dragging condition of the upper brake lining resulted in a condition, which restricted the wheel from being rotated freely by hand. The use of a three-foot extension bar was necessary to rotate the front wheel in this condition. The observed resistance was consistent for the full rotation of the wheel.

The right front brake assembly was disassembled and examined. The brake drum, spindle, bearings, upper and lower brake linings, return springs, plunger housings, actuating pistons, anchor pistons, rollers, wedge assemblies, adjuster levers and caps were examined. All components were greased and no foreign substances were found. No evidence of excessive heating was observed on the brake linings, brake drum, bearings, or spindle shaft surfaces. Both linings were found to have been properly installed, fully seated and the brake linings were of equal thickness. The anchor and actuating pistons were fully seated in the housings. All foundation brake components were found to be properly assembled and installed. The inside diameter of the brake drum was measured utilizing an inside micrometer for out-of-specification diameters, as well as out of round conditions. No out of specification parts were observed, and the brake assembly was then reassembled. After re-assembly, the front wheel was rotated utilizing an electric wheel spinner to most accurately reproduce the conditions of the coach in movement. Although this method lacked the mass and momentum normally exercised upon the wheel assembly, both brake linings adjusted automatically with the upper lining remaining 1/32 of an inch out of adjustment. The wheel assembly rotated freely and the brake assembly did not return to its post accident condition.

A subsequent inspection of the right front wheel wedge assemblies revealed that the wedge shaft assembly of the rearward actuator would occasionally hang or stick in a partially applied position causing the brakes to drag slightly. This condition was not capable of being reliably duplicated.

The right side drive axle brake assembly was found to be out of adjustment. This axle's brake assemblies were configured with 16.5" X 8.625" S-cam air mechanical brakes with Bendix "K Series, Type 30" piston-style spring brake actuators with Haldex automatic slack adjusters which measured approximately six (6) inches in length from the center of the S-Cam shaft to the center of the clevis pin bushing. The push rod stroke for this brake assembly was measured at approximately 2-9/16 inches. The stroke travel, according to the brake chamber's specifications, indicated that the brake actuator was fully extended to its full stroke capability, which was 2-5/8 inches. The Engineering Manager of the Allied Signal Automotive Corporation, the brake actuator's manufacturer, indicated to Safety Board investigators that the recommended readjustment limit of this brake actuator was 2 inches. The Commercial Vehicle Safety Alliance's North American Standard addresses the readjustment of this type of brake at 2 inches and would consider the brake defective at 2-1/4 inches of stroke and beyond.

Inspection of the foundation brake components including the S-cam bushings, as well as the brake drum revealed no deficiencies or defects. However, a difference in brake lining wear was observed between the right and left drive axle linings.

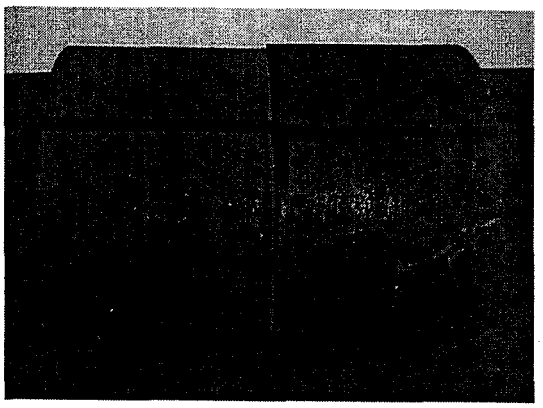

Left Drive Axle Brake Linings

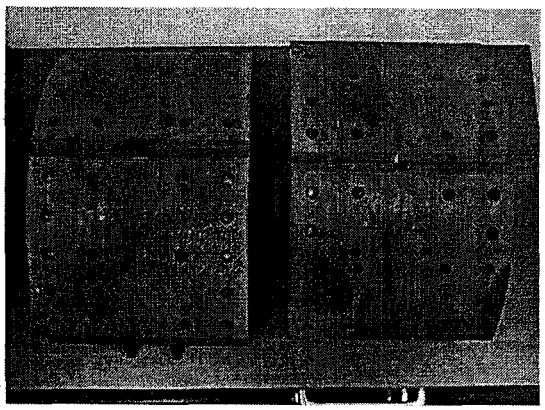

Right Drive Axle Brake Linings

The right axle's upper and lower brake shoe linings exhibited little evidence of full burnishing[1] while the left brake shoe linings exhibited full contact on the entire surface area of the linings. Maintenance records indicated that both brake linings had been simultaneously replaced on November 23, 1998, 3,945 miles prior to Safety Board inspections.

Inspection of the right drive axle slack adjuster revealed that the adjusting hex nut was encrusted in thick, greasy debris. After clearing away the debris from the adjusting nut, the slack adjuster was manually adjusted into an adjustment of approximately 1-½ inches of push rod stroke. While clearing away the greasy road grime from the hex adjusting nut, it was observed that the slack adjuster's control arm was broken and was also covered in greasy road grime. The brakes were then repeatedly applied and the slack adjuster failed to hold the previously made adjustment. The right drive axle's dual wheel assembly was removed and the slack adjuster, serial number 80310205, was removed for closer visual examination and photographing. The design of the Haldex slack adjuster relies on the proper installation of the slack adjuster, as well as the control arm being securely attached. According to Haldex, the broken control arm bracket would have prohibited the slack adjuster from making automatic brake adjustments as the linings and drums wore.

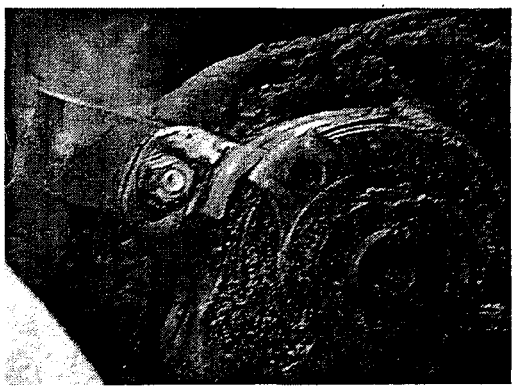

Right slack adjuster broken control arm

Following is a table of air brake chamber types and sizes, slack adjuster types and lengths, measured push rod strokes, lining movement and lining thickness' found during inspection at each wheel.

[1] *Brake Burnish is defined by the Motor Truck Engineering Handbook, fourth edition, as the conditioning of a brake's friction surfaces by wear and temperature, either by a test procedure or in-service operation.*

COACH BRAKE SYSTEM COMPONENT INSPECTION				
Axle	**Chamber**	**Adjuster**	**Measured Stroke**	**Lining Thickness**
1 Right	Dual / 9	Auto Wedge	Upper * / Lower1/16	Upper 5/8 / Lower 5/8
1 Left	Dual / 9	Auto Wedge	Upper 1/32 / Lower1/16	Upper 21/32 / Lower 5/8
2 Right	30/30	6" Auto	2-9/16"	Upper 3/4 / Lower 11/16
2 Left	30/30	6" Auto	1-7/8"	Upper 11/16 / Lower 5/8
3 Right	Single 9	Auto Wedge	Upper 1/16 / Lower1/16	Upper 11/16 / Lower 5/8
3 Left	Single 9	Auto Wedge	Upper 1/16 / Lower1/16	Upper 15/32 /Lower15/32
* Right front upper brake shoe was found to be in contact with the brake drum. No movement was observed during brake applications.				

Forensic Examinations – The slack adjuster from the right side drive axle was submitted to the Safety Board Materials Laboratory in Washington, D.C., for further examination. In addition to a metallurgy examination, grease samples from within the slack adjuster were also submitted to determine the type of grease that had been utilized during maintenance intervals. Laboratory analysis indicated that the samples submitted contained a .018 percent concentration of molybdenum disulfide.

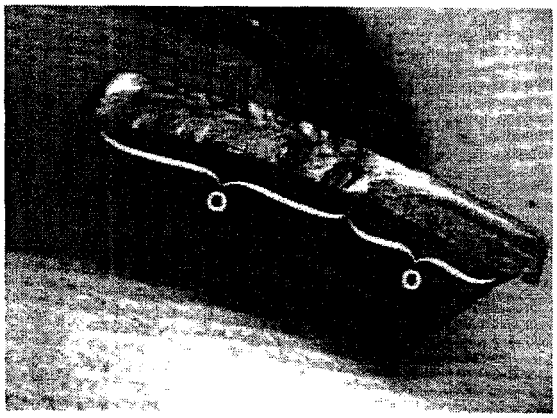

Fracture surface of control arm

Metallurgic examinations of the right slack adjuster's control arm indicated the presence of crack arrest marks typical of fatigue. Fatigue progression was observed through at least fifty percent of the wall thickness. The fatigue striations on the fracture surface near the origin also contained corrosion damage. The remaining portion of the fracture contained mechanical damage that obliterated the fracture features.

Component Testing - Because the right drive axle adjuster failed to maintain adjustment during the Safety Board's post accident vehicle inspections, mechanical examinations and functional testing of both drive axle slack adjusters were undertaken. Component examinations and testing were conducted by Safety Board investigators, the Haldex Brake Products Corporation, and VanHool at Haldex's Grain Valley, Missouri facility. Visual examination of the accident coach's slack adjusters revealed that both adjusters had threads of the coil spring cover exposed. According to Haldex technicians, this condition could indicate a low coil spring force. Functional testing revealed that the slack adjusters functioned as designed, making proper brake adjustments with the control arm bracket properly secured, however with the control arm unsecured, both adjusters failed to maintain proper adjustment. With the control arm bracket unsecured, the adjusters allowed the brake's adjustment to back off with each brake application.

The observations of the testing was that brake push rod stroke increased with repetitive applications when the control arm bracket was disconnected on adjusters from the accident coach as well as other new adjusters tested. Testing additionally revealed that the rate at which push rod stroke increased appeared greatest when the following conditions were present:

- The internal coil spring force was below factory specifications.
- Brake application pressures were higher.
- Brake application and release times were faster.
- The control arm bracket was slightly constrained in motion, as if fractured and each fracture surface was making contact, or as if the bracket was not secure or properly fastened.

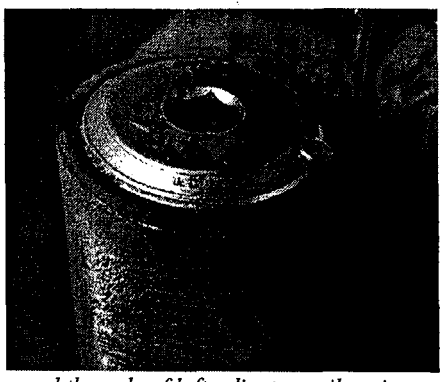

Exposed threads of left adjuster coil spring cover

Slack Adjuster History – The slack adjusters from the accident coach were manufactured during the third week of January of 1988, with sequential numbers of 10,194 and 10,205.

The adjusters had been originally purchased by Comauto S.A., a parts distributor in Belgium, who was a supplier to VanHool during that time period. The subject adjusters were purchased along with 148 other slack adjusters of the same part number, with serial numbers 80310094 through 80310243, all of which were manufactured during the third week of January 1988.

During the time period of the coach's manufacture, VanHool had been researching a braking issue that involved the over-heating of Eaton drive axle brake assemblies. The over-heating issue was thought to be caused by the over adjustment of the brakes caused by the Haldex automatic slack adjuster.

The Haldex Brake Products Corporation provided Safety Board investigators with information that mechanics with ABC Bus of Hillsboro MO, a VanHool distributor, had been instructed by VanHool to back off the rear cover of Haldex part number 70905 slack adjusters on Eaton drive axles. An official with ABC Bus in Winter Garden, Florida, stated to Safety Board investigators that the coil spring cover was being turned counter-clockwise to reduce pressure on the internal worm shaft providing additional brake lining to drum clearances in an effort to resolve the overheating issues with those brake assemblies.

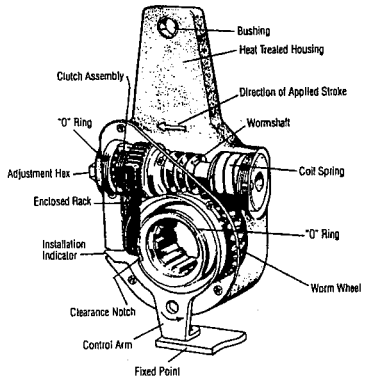

Mechanical diagram of Haldex adjuster

On July 12, 1991, ABC Bus in Winter Garden, Florida received 28 "modified slack adjusters" from VanHool in Belgium, as part of what VanHool described as a "brake campaign" to be distributed and exchanged at no charge to the customer. These modified slack adjusters were intended to provide the additional lining to drum clearances, that VanHool sought to reduce the brake operating temperature.

However, ABC Bus provided Safety Board investigators with shipping documents which indicated that the twenty-eight (28) modified slack adjusters were sent back to VanHool and never distributed as originally intended.

On October 16, 1991, VanHool issued a product improvement bulletin which listed, in part, mechanical modifications which were being carried out on the last twenty-eight (28) vehicles in a batch of one hundred and three (103), coaches. The effected coach serial numbers included 20976 through 2100 and 21701, 21702 and 21714, none of which correspond with the accident coach. Item number two on the bulletin included the use of "adapted slack adjusters". The bulletin additionally stated, in part, that "these modifications would be included on all future vehicles T 815 Alicron (T 800 Series) 4th batch and T 815 Acron Magnum (T 815 Series) from VIN 19646 onwards unless Carlisle and Bendix testing prove otherwise". VanHool provided documents submitted by Carlisle indicating that the use of the originally equipped adjusters without modification was appropriate.

Neither ABC Bus, nor VanHool were able to provide Safety Board investigators with any written polices on the practice of adjusting, modifying or backing off the coil spring covers of the Haldex slack adjuster, or what specifics, if any, were entailed in the modification of the Haldex slack adjuster. VanHool officals have concluded that they are unable to determine whether modifications to the slack adjusters were ever actually conducted due to the lack of any documents indicating the same.

F. NEW YORK DEPARTMENT OF TRANSPORTATION

Vehicle Inspection - Three days prior to the accident, the coach had been inspected by an inspector from the NYDOT's Region 11 facility and was issued inspection certificate number C578987, which was valid until June 21, 1999. The reported odometer reading at the time of the inspection was 434,788 miles, 303 miles prior to the accident. The issuance of the certificate indicated that, at the time of inspection, the inspector did not observe any conditions, which would have required that the coach be placed out of service. The only defect which was reported on the inspection report was that an accumulation of oil was observed on the bottom of the engine which did not meet the "out-of-service" criteria stipulated in part 721.39 of the State of New York's Transportation Regulations.

A previous NYDOT inspection of the accident coach, conducted on July 1, 1998, noted two defects, the inspection report indicated that the white "standee line" had a piece missing, and that the area around the engine and transmission exhibited an accumulation of oil . As part of the Safety Board's post accident vehicle inspections, Safety Board investigators along with two NYDOT motor vehicle inspectors, conducted an additional vehicle inspection equivalent to the NYDOT annual inspection criteria. This inspection revealed a total of twenty-one defects, of which ten defects the Safety Board could not readily attribute to being accident induced. Those violations included: the entrance door emergency release was inoperative as the control valve was located behind the dash panel, the fire extinguisher was in a state of discharge, the right front lower brake shoe had a chip/crack, the left drive axle exhibited an oil leak, the front axle bearing caps were missing two bolts on each side, the tag axle bearing caps were missing 2 bolts on each side, drive axle differential pinion seal was leaking oil, the engine underside was wet with oil, right drive axle slack adjuster inoperative, and the right drive axle brake push rod throw was long. Of these defects, six of those conditions were considered "out of service" defects under the State of New York's "Out of Service Inspection Criteria", part 721.39 of the State of New York's Transportation Regulations.