Appendix I

Hazardous Materials Group Factual

Excerpts from CGA Stds and Testing

Wilmer, TX
HWY-05-MH-035

COMPRESSED GAS ASSOCIATION, INC.
500 FIFTH AVENUE • NEW YORK, N.Y. 10110 • (212) 354-1130

FIRE TEST DATA IN SUPPORT OF S-1.1 FORMULAE

October 30, 1978
(Original)

November 13, 1978
(Revised)

December 11, 1978
(Revised)

November 1, 1980
(Revised)

Pamphlet S-1.1 Validation	Paragraph 4.5
Cylinder Type	Luxfer DOT E-6498 Aluminum
Cylinder Content	Non-Liquefied, High Pressure Gas, O_2, 2100 and 2350 psia @ 70° F
Valve Type	Condon 880, Medical "E" Valve (Dwg. 71877)
Wc	64.9 lbs.
Safety Flow Area	Calculated by S-1.1 .0072 in^2 Actual .0065 in^2
Design Flow	9.85 SCFM
Actual Flow	9.75 SCFM
Type of Safety	CG-1, 2600-3000 psig, rated burst range
Type of Test	Chimney
Position	Vertical
Release Pressure	2600 psi (Tests 332 and 336)
Result (Comment)	Venting was completed in four minutes (Test 332) and five minutes (Test 336). Actuation occurred in less than four minutes in both tests. Actuation of the relief device appears to have extinguished the fire.

Submitted by: R. Jernberg,
Pressure Pak;
G. Waite,
Luxfer

FIRE TEST DATA, BUREAU OF EXPLOSIVES

CYLINDER PRESSURE, CYLINDER SURFACE AVERAGE TEMP., FLUE GAS AVERAGE TEMP VERSUS TIME AFTER START OF TEST

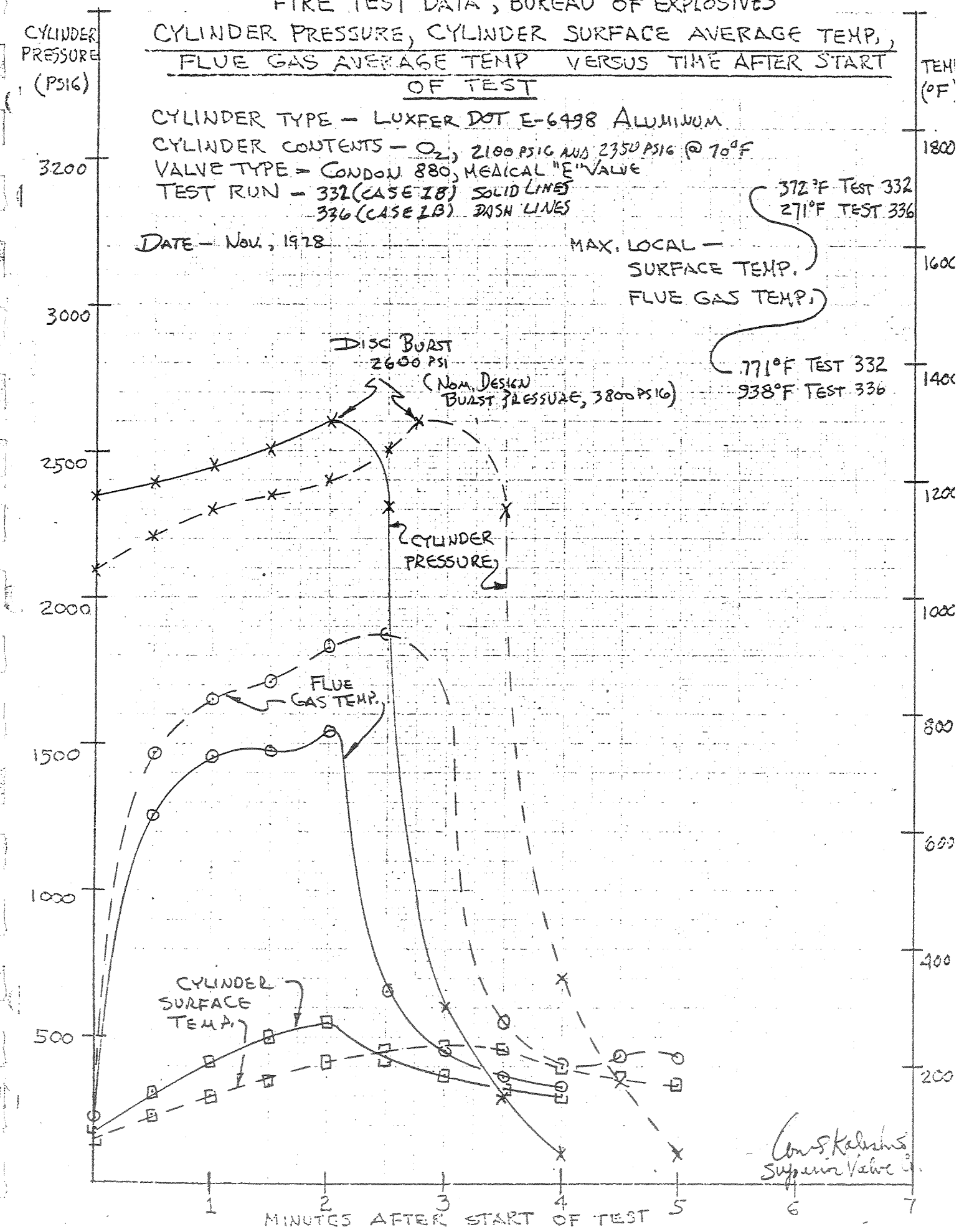

Cons. Kalsing
Supreme Valve

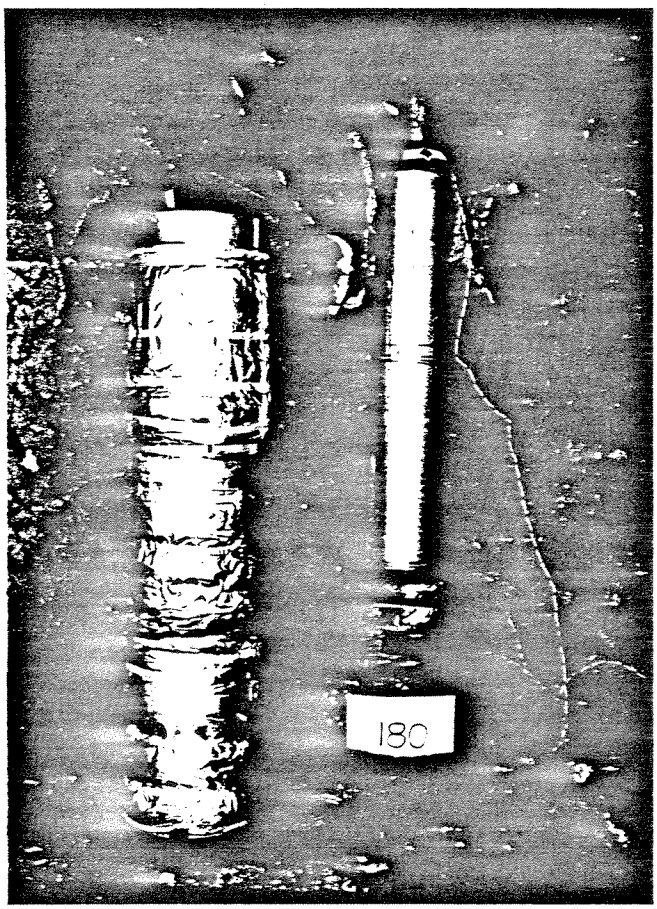

138-7 Luxfer DOT E-6498 Aluminum Cylinder and Fire Test Apparatus Used by Luxfer (From previous tests)

BONFIRE TEST DATA

TEST NO. 332 CYLINDER TYPE NISO SERIAL NO. CC 7946 DATE 11/8/78

PROPANE BURNER - MIN ORIFICE PRESSURE PAK VALVE #71877

Elapsed Time	Pressure psi	TEMPERATURE OF Valve STACK	Valve	Cyl. Center	Cyl. Bottom	REMARKS
0:0	2350	110	86	91	95	
0:30	2400	628	98	120	190	
1:00	2450	729	108	138	274	
1:30	2500	738	118	158	336	
2:00	2600	771	130	177	372	
~~2:02~~ ~~2:30~~	-	-	-	-	-	*S.R.
	2300	331	120	167	271	
3:00	600	228	107	155	216	
3:30	300	182	108	142	180	
4:00	100	167	111	136	167	** V - 2'
4:30						
5:00						
5:30						
6:00						
6:30						
7:00						
7:30						
8:00						Lading 2350psi O_2
8:30						
9:00				*SR Safty Relief		
9:30				** V Vent Tem		
10:00						

BONFIRE TEST DATA

TEST NO. 336 CYLINDER TYPE N150 SERIAL NO. SD176 DATE 11/9/78

PROPANE BURNER - MIN ORIFICE Pressure PAK VALVE #71877

Elapsed Time	Pressure psi	TEMPERATURE OF Valve (STACK)	Valve	Cyl. Center	Cyl. Bottom	REMARKS
0:0	2100	118	68	76	79	
0:30	~~2200~~	734	104	104	129	
1:00	2300	824	118	135	165	
1:30	2350	855	132	140	201	
2:00	2400	914	158	162	251	
2:30	2500	938	171	176	271	
2:44 ~~3:00~~	2600	–	–	–	–	* S.R.
3:30	2300	276	121	202	255	
4:00	700	202	107	181	222	
4:30	350	222	107	164	200	
5:00	100	210	109	150	187	** V - 2' 16"
5:30						
6:00						
6:30						
7:00						
7:30						
8:00						Loading 2100psi O_2
8:30						
9:00						
9:30				* SR Safty Relief		
10:00				** V Vent Time		

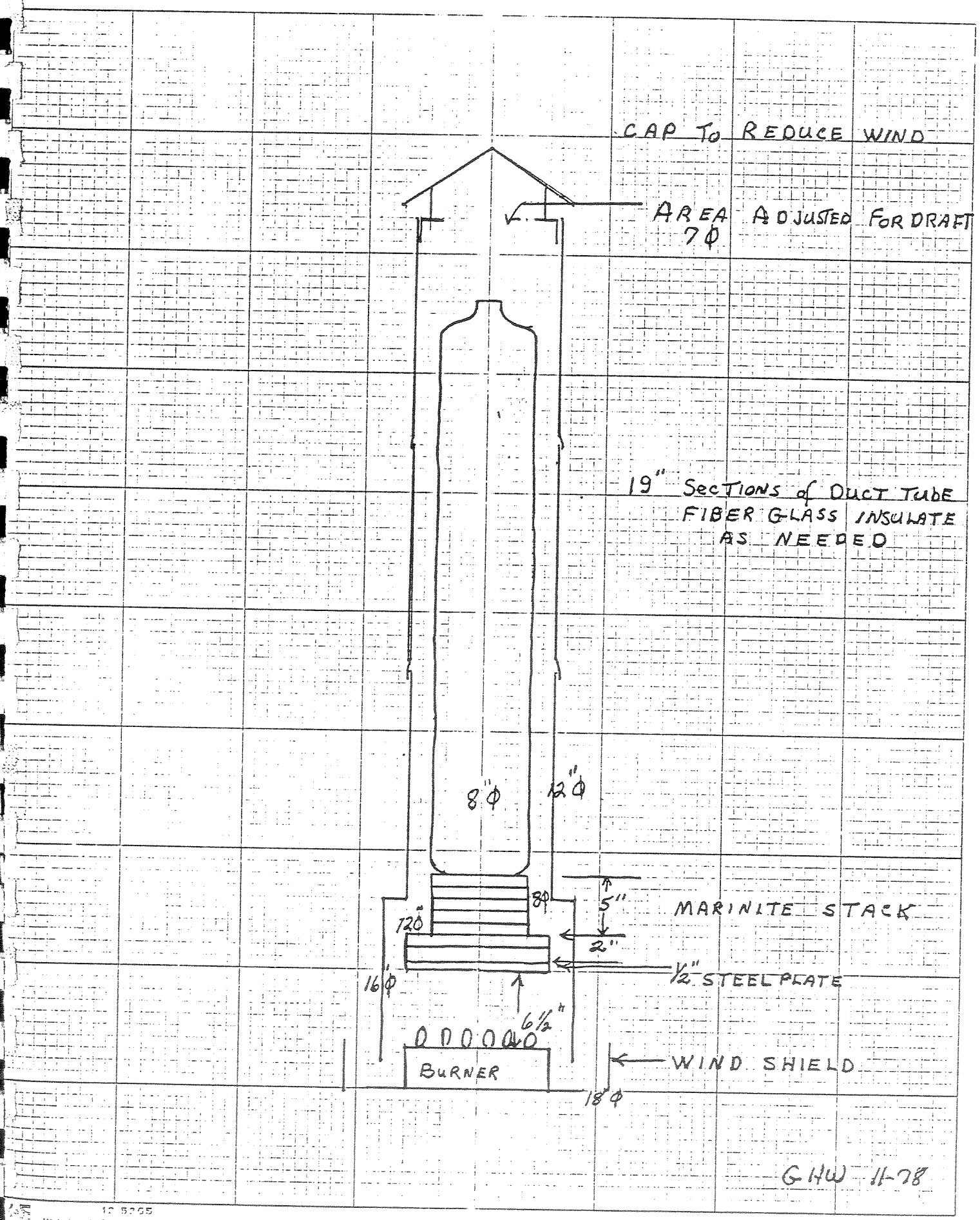

KEUFFEL & ESSER CO.

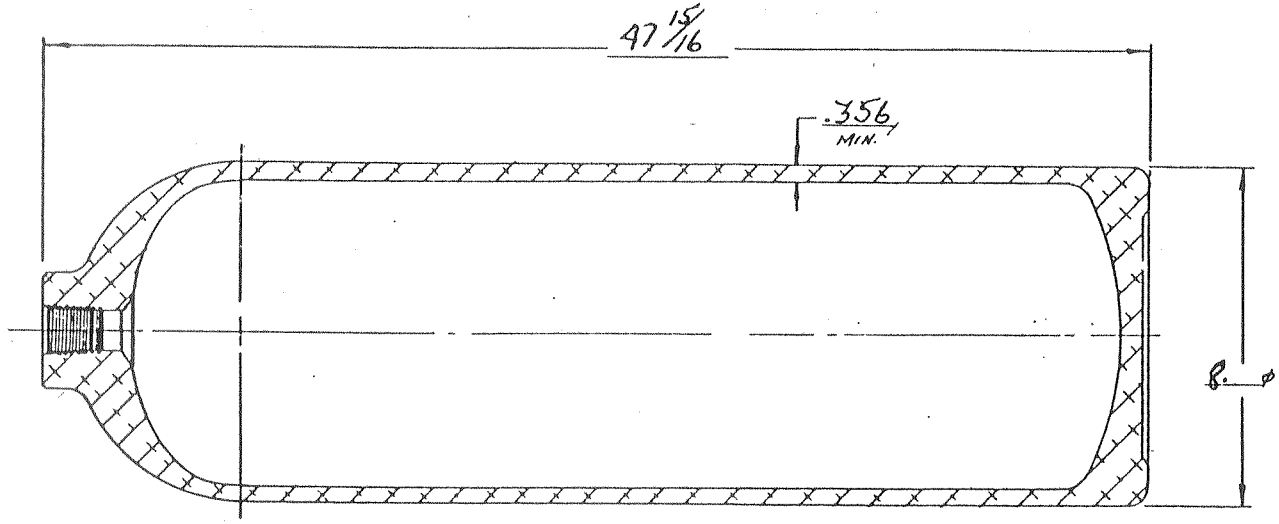

NOTES:

1. Cylinder to meet DOT Permit 6498
2. Capacity:
   150 cu.ft. at 2015 psig
   water vol.=
   1800 cu.in. min.
3. Test Pressure
   3360 psig
4. Service Pressure
   2015 psi

THREAD 1.125-12 UNF

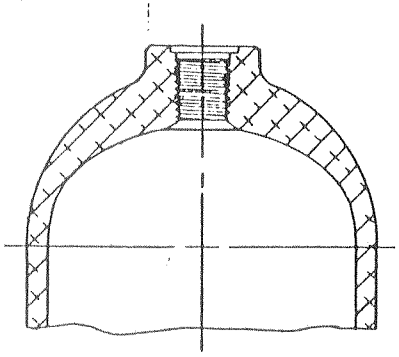

STYLE 1

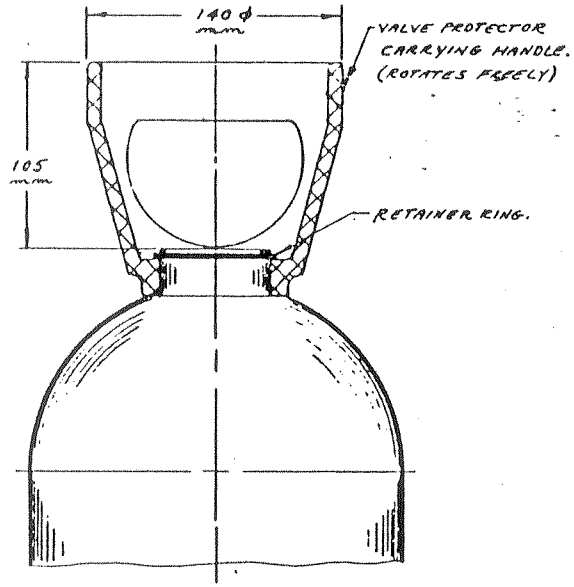

STYLE 2

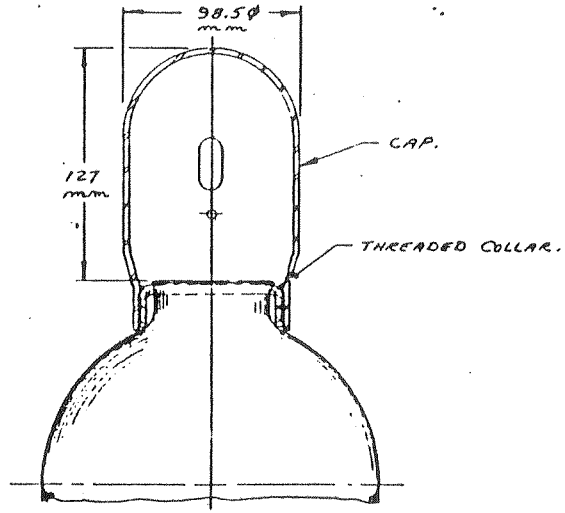

STYLE 3

ITEM	QUAN.	DESCRIPTION

LUXFER USA LIMITED
RIVERSIDE, CALIFORNIA

SCALE	LIMITS ON DIM UNLESS OTHERWISE SPECIFIED	BREAK ALL SHARP EDGES UNLESS NOTED	PER ASSEM.
DATE	ANGULAR ± 1°		PER ASSEM.
	FRACTIONAL ± 1/16	FINISH UNLESS NOTED	FINAL ASSEMBLY NAME & NO.
DRAWN BY	DECIMAL .XX ± .02 .XXX ± .005		
APPROVED	USED FOR/ON PART OR SUB-ASSEMBLY NAME & NUMBER: FOR COMPRESSED GAS		
SHEET OF	NAME: ALUMINUM CYLINDER	NUMBER: C-N150-7C	REV.

REF.	CHANGE	BY	DATE
A			

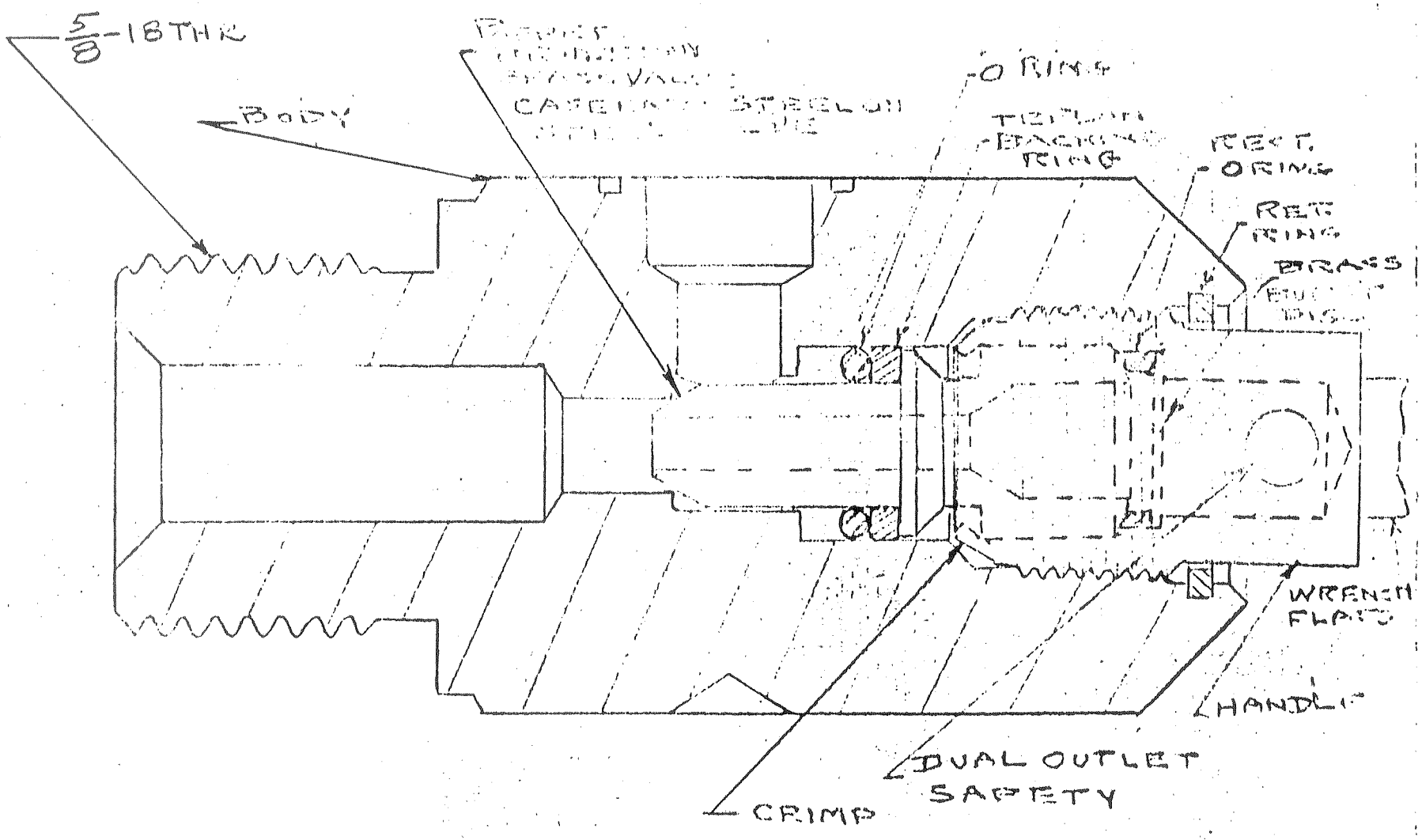

TYPE CG-1 FLOW 9.75 CU. FT/MIN.
DISK 2800 PSI BURST PRESSURE

PRESSURE PAK INC. E. HAMPTON CONN.	
MAT. BRASS OR STEEL	
METAL VALVE	

30

Luxfer USA Limited
1995 Third Street, Riverside, California 92507
Mail: P.O. Box 5300 — 92517
Telephone 714-684-5110 TWX 910-332-1755

November 14, 1978

Mr. Bill Kalaskie
Superior Valve Company
2200 North Main Street
Washington, PA 15301

Dear Bill:

Enclosed please find the following:

1. Bonfire Test Data Sheets - Tests 331, 332, 335, 336
2. Propane Burner Sketch
3. Pressure Pak Valve Drawing
4. Blueprints C50 and N150
5. Photograph of Propane Burner and Cylinder From Previous Test.

Bob Jernberg says you should have a drawing and test report of his valve used on the Linde cylinder. The flow report should be 9.75 cfm.

For your time temperature curves you will have to use Test Numbers 335 and 336, as we did not record any data on the other two tests after the safety functioned.

As added information we ran an experimental fuzible safety with a flow rating of 6.7 cfm in a wood bonfire and it safely vented 2000 psi of N_2 in an N150 cylinder in 2 minutes.

Let me know if there is anything missing.

Sincerely,

G. H. Waite,
Project Manager

GHW:td