APPENDIX I

1998 Tuboscope ILI Report. (70+cover sheet)

Survey Information Summary

11/03/2007

Dixie Pipeline Co.

Appendix - I

Job No.	4769.02
Survey Section	Hattiesburg -
Run No.	1 05/20/98
Pipeline Size	12 inch
Pipeline Length	120M
Sales Representative	[redacted]
Field Inspector	[redacted]
Log Analyst	[redacted]
Launch / Trap Distance	294 0.0 635012 0.0
Beginning Weld No.	0

Number of Graded Joints

< 30%	30%-40%	40%-50%	50%-60%	60% >
20	6	1	1	0

12" Propane Pipeline
Hattiesburg to Demopolis
Linalog Job Number 4769.02

This section of Dixie Pipeline Company's line was surveyed by Pipeline Services in May of 1998. The 120.2 mile section, located in Mississippi and Alabama, is reported to be constructed primarily of Grade X-52, ERW manufactured, .250 inch nominal wall pipe. Sections of .375 and .500 inch nominal wall pipe were also reported.

Inspection Tool Run

The survey launched May 19 at 9:52 a.m. was accepted as the Log of Record. Propane propelled the Linalog survey tool for approximately 34 hours 30 minutes at an average of 3.5 miles per hour. Channel 8 sustained suspension damage at Wheel Count 462,009 which effected its sensitivity for the duration of the survey. No other problems were reported during this run.

Verification Dig Sites

No verification digs were performed while Pipeline Services personnel were on location.

Survey History With Linalog

This is an initial inspection of this line by Tuboscope Vetco Pipeline Services Inc. Prior inspection details of this line will appear in this section on future written survey reports.

Results

The completed Linalog survey of this section resulted in the following findings. Total number of:

Grade 1 Joints - 20-30% Pipe Wall Loss - 20
Grade 2 Joints - 30-40% Pipe Wall Loss - 6
Grade 3 Joints - 40-50% Pipe Wall Loss - 1
Grade 4 Joints - 50-60% Pipe Wall Loss - 1
Grade 5 Joints - Greater Than 60% Pipe Wall Loss - 0

The results listed above are the total number of graded joints in this section of pipeline. For a detailed listing of the graded joints, see your Linalog Plus Flaw List. Typical accuracy tolerance is ± 15% of nominal wall thickness.

Special Log Notations

Linalog Plus typically reports the location of the three welds upstream and three welds downstream of pipeline features and defects. This format allows the pipeline operator to confirm positioning at dig sites by knowing the lengths of upstream and downstream pipe joints. Limiting the report to welds associated with features and defects also facilitates efficient access of the most significant data. The "Joint Length" column reflects the distance from one reported weld to the next reported weld on the Flaw List. Long distances between reportable defects and features result in long joint length entries.

Refer to the Survey Data Disk Synopsis Page 1 to view a copy of this report.

Refer to the Survey Data Disk Synopsis Page 2 to view the Linalog Plus User Guide.

Conclusion

The results listed here and in the flaw list are Pipeline Services' best evaluation of the condition of a pipeline at the time of the survey. This evaluation is based on information provided by you, our customer, and data gathered from surveys similar to yours.

TABLE OF CONTENTS

I. INTRODUCTION

II. GETTING STARTED
- A. HARDWARE REQUIREMENTS
- B. SOFTWARE REQUIREMENTS

III. SOFTWARE OPERATION
- A. SURVEY INFORMATION SUMMARY
- B. SURVEY SYNOPSIS
- C. STANDARD FLAW LIST
  1. Operation
  2. Format and Definitions
  3. Measurements Using Feet and Inches
  4. Measurements Using the Metric System
  5. Sorting the Flaw List
- D. PRESSURE REFERENCE FLAW LIST
  1. Format
  2. Operation and Definitions
  3. Sorting the Pressure Reference Flaw List
  4. Pressure Reference Charts
- E. LINALOG PLUS DEFECT REPORT
- F. ADDITIONAL LINALOG PLUS CHARTS

IV. SPECIAL LOG NOTATIONS
- A. COMPARISON TO PREVIOUS SURVEYS
- B. CORROSION GRADES VS PIPEWALL LOSS
- C. FLAW LIST COMMENTS
  1. Begin Casing (BC)
  2. Determined Circumferentially Influenced (DCI)
  3. Crossing (X-ing)
  4. Digs
  5. Downstream (>)
  6. End Casing (EC)
  7. Excessive Tool Speed
  8. Linacron (LC)
  9. Pipewall (PW)
  10. Possible Attachment (Poss. Attach.)
  11. Possible Mill or Mechanical Related (PMR)
  12. Station Numbers (Sta.)
  13. Transferred Items (X-ferred)
  14. Upstream (<)

V. TECHNICAL SUPPORT

VI. CONCLUSION

Test goes here for page #3
Use the 'Text' menu option to format the report

the 'Tab' key works

o Lower case o can be used for bulleted items lists.

This is Arial 18 Bold

Flaw List

11/03/2007

4769.02

Dixie Pipeline Co.

Hattiesburg - Demopolis

Event	Wheel Count	Joint Length	Distance from Weld	Orientation Degree	Depth	Defect Length	Speed	Comments
Marker	294 ' 0.0 "						0.0	Launch Hattiesburg
Feature	466 ' 0.0 "						4.1	End Casing (BC Not Detected)
Weld	515 ' 0.6 "	4 ' 11.3 "					4.1	
Weld	519 ' 11.9 "	5 ' 4.1 "					4.1	
Marker	522 ' 0.0 "						0.0	Valve
Weld	525 ' 4.0 "	22 ' 5.0 "					4.1	
Weld	547 ' 9.0 "	99 ' 10.5 "					4.2	
Feature	566 ' 7.0 "						4.1	Begin Casing
Feature	638 ' 6.5 "						4.1	End Casing Possible Shorted
Weld	647 ' 7.5 "	56 ' 11.8 "					4.1	
Weld	704 ' 7.3 "	16 ' 6.7 "					4.1	
Weld	721 ' 2.0 "	230 ' 10.2 "					4.1	
Feature	923 ' 7.9 "						4.1	End Casing (BC Not Detected)
Weld	952 ' 0.2 "	51 ' 2.3 "					4.2	
Weld	1,003 ' 2.5 "	13 ' 9.9 "					4.1	
Weld	1,017 ' 0.4 "	3,088 ' 3.8 "					4.1	
Weld	4,105 ' 4.2 "	57 ' 3.2 "					4.0	
Weld	4,162 ' 7.4 "	60 ' 10.6 "					4.1	
Weld	4,223 ' 6.0 "	60 ' 11.9 "					4.1	
D- 1	4,256 ' 7.0 "		33 ' 1.0 "	11	20	0 ' 0.4 "	4.1	
Weld	4,284 ' 5.9 "	60 ' 3.4 "					4.0	
Weld	4,344 ' 9.3 "	56 ' 4.8 "					4.1	
Weld	4,401 ' 2.1 "	130 ' 6.2 "					4.0	
Weld	4,531 ' 8.3 "	59 ' 6.7 "					4.3	
Weld	4,591 ' 3.0 "	59 ' 2.4 "					4.1	
Weld	4,650 ' 5.4 "	39 ' 10.9 "					4.1	
Feature	4,684 ' 4.7 "						4.1	Tap
Weld	4,690 ' 4.3 "	1 ' 10.6 "					4.0	
Feature	4,691 ' 4.7 "						4.0	Stopple
Weld	4,692 ' 2.9 "	13 ' 11.1 "					4.0	
Weld	4,706 ' 2.0 "	57 ' 11.1 "					4.1	
Feature	4,732 ' 10.1 "						4.1	Tap
Weld	4,764 ' 1.1 "	9 ' 9.9 "					4.1	
Weld	4,773 ' 11.0 "	55 ' 4.3 "					4.1	
Weld	4,829 ' 3.3 "	18,939 ' 9.3 "					4.1	
Marker	8,743 ' 0.0 "						0.0	LC A-1 19479+77
Marker	12,913 ' 0.0 "						0.0	LC A-2 19521+66

Flaw List

11/03/2007

4769.02

Dixie Pipeline Co.

Hattiesburg - Demopolis

Event	Wheel Count	Joint Length	Distance from Weld	Orientation Degree	Depth	Defect Length	Speed	Comments
Marker	16,031 ' 0.0 "						0.0	LC A-3 19552+97
Marker	20,734 ' 0.0 "						0.0	LC A-4 19600+13
Weld	23,769 ' 0.6 "	41 ' 1.6 "					4.0	
Weld	23,810 ' 2.2 "	38 ' 11.4 "					3.9	
Weld	23,849 ' 1.6 "	54 ' 9.8 "					3.8	
D- 2	23,901 ' 1.3 "		51 ' 11.7 "	9	27	0 ' 0.4 "	3.9	
Weld	23,903 ' 11.4 "	57 ' 11.9 "					3.9	
Weld	23,961 ' 11.3 "	58 ' 2.6 "					3.9	
Weld	24,020 ' 1.9 "	708 ' 6.3 "					3.9	
Weld	24,728 ' 8.2 "	44 ' 8.6 "					3.9	
Weld	24,773 ' 4.8 "	57 ' 5.8 "					3.8	
Weld	24,830 ' 10.6 "	11 ' 8.9 "					4.0	
D- 3	24,831 ' 6.7 "		0 ' 8.1 "	12	23	0 ' 2.2 "	4.1	
Weld	24,842 ' 7.5 "	48 ' 7.2 "					4.1	
Weld	24,891 ' 2.7 "	14 ' 2.7 "					3.8	
Weld	24,905 ' 5.4 "	16,993 ' 10.8 "					3.9	
Marker	25,398 ' 0.0 "						0.0	LC A-5 19653+39
Marker	30,677 ' 0.0 "						0.0	LC A-6 MP 373.12 19699+70
Marker	34,108 ' 0.0 "						0.0	LC A-7 19734+69
Marker	39,116 ' 0.0 "						0.0	LC A-8 19784+89
Weld	41,899 ' 4.2 "	58 ' 7.5 "					4.2	
Weld	41,957 ' 11.7 "	59 ' 5.3 "					4.1	
Weld	42,017 ' 5.0 "	58 ' 4.7 "					4.1	
D- 4	42,058 ' 11.4 "		41 ' 6.4 "	1	25	0 ' 0.5 "	4.0	
Weld	42,075 ' 9.7 "	58 ' 8.1 "					4.1	
Weld	42,134 ' 5.8 "	58 ' 9.9 "					4.1	
Weld	42,193 ' 3.7 "	621 ' 7.5 "					4.1	
Weld	42,814 ' 11.2 "	58 ' 8.0 "					4.1	
Weld	42,873 ' 7.2 "	58 ' 9.1 "					4.0	
Weld	42,932 ' 4.3 "	58 ' 11.9 "					4.1	
D- 5	42,987 ' 7.1 "		55 ' 2.8 "	4	27	0 ' 3.3 "	4.0	
Weld	42,991 ' 4.2 "	58 ' 7.2 "					4.0	
Weld	43,049 ' 11.4 "	58 ' 9.5 "					4.0	
Weld	43,108 ' 8.9 "	26,055 ' 8.0 "					4.1	
Marker	44,534 ' 0.0 "						0.0	Magnet 1 19839+17
Marker	49,779 ' 0.0 "						0.0	Valve
Marker	54,691 ' 0.0 "						0.0	LC A-9 19941+25

Flaw List

11/03/2007

4769.02

Dixie Pipeline Co.

Hattiesburg - Demopolis

Event	Wheel Count		Joint Length		Distance from Weld		Orientation Degree	Depth	Defect Length		Speed	Comments
Marker	60,057 '	0.0 "									0.0	LC A-10 19995+14
Marker	64,506 '	0.0 "									0.0	LC A-11 20039+85
Weld	69,164 '	4.9 "	57 '	4.6 "							4.0	
Weld	69,221 '	9.5 "	59 '	4.7 "							4.0	
Weld	69,281 '	2.2 "	58 '	3.5 "							3.9	
D- 6	69,329 '	6.0 "			48 '	3.8 "	2	51	0 '	0.3 "	3.8	
Weld	69,339 '	5.7 "	91 '	9.3 "							3.9	
Feature	69,349 '	0.0 "									4.0	Begin Casing
Feature	69,400 '	0.0 "									4.0	End Casing
Weld	69,431 '	3.0 "	58 '	4.9 "							4.0	
D- 7	69,485 '	4.1 "			54 '	1.1 "	7	21	0 '	1.1 "	4.0	
Weld	69,489 '	7.9 "	59 '	2.1 "							4.0	
Weld	69,548 '	10.0 "	58 '	9.2 "							3.7	
Weld	69,607 '	7.2 "	12,916 '	10.6 "							3.7	
Marker	74,586 '	0.0 "									0.0	Magnet 2 20140+44
Marker	79,539 '	0.0 "									0.0	Magnet 3 20190+97
Weld	82,524 '	5.8 "	58 '	0.1 "							4.0	
Weld	82,582 '	5.9 "	59 '	2.3 "							4.0	
Weld	82,641 '	8.2 "	148 '	0.3 "							4.0	
Feature	82,667 '	0.0 "									3.9	Begin Casing
Feature	82,758 '	8.8 "									4.0	End Casing
Weld	82,789 '	8.5 "	38 '	9.9 "							4.0	
Weld	82,828 '	6.4 "	59 '	0.3 "							4.1	
Weld	82,887 '	6.7 "	12,444 '	6.3 "							4.0	
Marker	88,008 '	0.0 "									0.0	Magnet 4 20276+12
Weld	95,332 '	1.0 "	11 '	8.5 "							3.6	
Weld	95,343 '	9.5 "	38 '	6.6 "							3.5	
Weld	95,382 '	4.1 "	121 '	9.1 "							3.6	
Feature	95,401 '	0.0 "									3.6	Begin Casing
Feature	95,458 '	0.0 "									3.6	End Casing
Weld	95,504 '	1.2 "	58 '	6.3 "							3.6	
Weld	95,562 '	7.5 "	58 '	5.7 "							3.5	
Weld	95,621 '	1.2 "	30,032 '	9.5 "							3.6	
Marker	97,164 '	0.0 "									0.0	LC A-12 20368+19
Marker	102,754 '	0.0 "									0.0	LC A-13 20414+68
Marker	104,988 '	0.0 "									0.0	Magnet 5 20446+68
Marker	109,947 '	0.0 "									0.0	Valve

Flaw List

11/03/2007

4769.02

Dixie Pipeline Co.

Hattiesburg - Demopolis

Event	Wheel Count	Joint Length	Distance from Weld	Orientation Degree	Depth	Defect Length	Speed	Comments
Marker	114,570 ' 0.0 "						0.0	LC A-14 20542+58
Marker	120,173 ' 0.0 "						0.0	LC A-15 20598+51
Marker	125,242 ' 0.0 "						0.0	Magnet 6 20649+27
Weld	125,653 ' 10.7 "	58 ' 10.4 "					3.5	
Weld	125,712 ' 9.1 "	59 ' 7.0 "					3.5	
Weld	125,772 ' 4.1 "	52 ' 5.3 "					3.5	
D- 8	125,804 ' 3.6 "		31 ' 11.5 "	9	27	0 ' 0.6 "	3.5	
Weld	125,824 ' 9.4 "	59 ' 6.9 "					3.5	
Weld	125,884 ' 4.3 "	59 ' 6.7 "					3.5	
Weld	125,943 ' 11.0 "	48,118 ' 0.8 "					3.5	
Marker	130,915 ' 0.0 "						0.0	LC A-16 MP 392.00
Marker	135,439 ' 0.0 "						0.0	Magnet 7 20751+44
Marker	139,758 ' 0.0 "						0.0	LC A-17 20794+58
Marker	146,076 ' 0.0 "						0.0	Magnet 8 20851+72
Marker	151,216 ' 0.0 "						0.0	Valve
Marker	156,187 ' 0.0 "						0.0	Magnet 9 20959+06
Marker	161,015 ' 0.0 "						0.0	LC A-18 21007+60
Marker	164,097 ' 0.0 "						0.0	LC A-19 21038+34
Marker	167,940 ' 0.0 "						0.0	LC A-20 21076+82
Weld	174,061 ' 11.8 "	58 ' 3.1 "					3.5	
Weld	174,120 ' 2.9 "	58 ' 3.0 "					3.6	
Weld	174,178 ' 5.9 "	50 ' 7.3 "					3.6	
D- 9	174,203 ' 3.5 "		24 ' 9.6 "	10	41	0 ' 1.9 "	4.0	
Weld	174,229 ' 1.2 "	59 ' 0.1 "					3.8	
Weld	174,288 ' 1.3 "	59 ' 0.7 "					3.8	
Weld	174,347 ' 2.0 "	13,579 ' 7.3 "					3.8	
Marker	174,582 ' 0.0 "						0.0	Magnet 10 21142+66
Marker	178,204 ' 0.0 "						0.0	LC A-21 21180+47
Marker	182,439 ' 0.0 "						0.0	LC A-22 21222+76
Weld	187,926 ' 9.3 "	58 ' 7.1 "					3.5	
Weld	187,985 ' 4.4 "	59 ' 1.0 "					3.5	
Weld	188,044 ' 5.4 "	158 ' 7.6 "					3.5	
Feature	188,057 ' 0.0 "						3.5	Begin Casing
Feature	188,149 ' 0.0 "						3.5	End Casing
D- 10	188,200 ' 11.1 "		156 ' 5.7 "	5	24	0 ' 1.8 "	3.6	
Weld	188,203 ' 1.0 "	42 ' 2.5 "					3.6	
Weld	188,245 ' 3.5 "	58 ' 6.4 "					3.5	

Flaw List

Dixie Pipeline Co.

Hattiesburg - Demopolis

Event	Wheel Count	Joint Length	Distance from Weld	Orientation Degree	Depth	Defect Length	Speed	Comments
Weld	188,303 ' 9.9 "	16,023 ' 6.8 "					3.5	
Marker	193,247 ' 0.0 "						0.0	Magnet 11 21331+46
Marker	196,708 ' 0.0 "						0.0	LC A-23 21385++63
Marker	202,495 ' 0.0 "						0.0	Valve
Weld	204,327 ' 4.7 "	58 ' 6.0 "					3.5	
Weld	204,385 ' 10.7 "	28 ' 6.0 "					3.5	
Weld	204,414 ' 4.7 "	1 ' 11.4 "					3.5	
Feature	204,415 ' 5.0 "						3.6	Stopple
Weld	204,416 ' 4.1 "	28 ' 5.6 "					3.6	
Feature	204,422 ' 5.0 "						3.4	Tap
Weld	204,444 ' 9.7 "	9 ' 9.5 "					3.5	
Weld	204,454 ' 7.2 "	4 ' 4.2 "					3.7	
Weld	204,458 ' 11.4 "	666 ' 2.4 "					4.0	
Marker	204,490 ' 0.0 "						0.0	Valve
Marker	204,759 ' 6.0 "						0.0	Valve
Marker	205,105 ' 0.0 "						0.0	Valve
Weld	205,125 ' 1.8 "	12 ' 6.7 "					4.2	
Weld	205,137 ' 8.5 "	4 ' 5.5 "					4.2	
Weld	205,142 ' 2.0 "	42 ' 2.5 "					4.2	
Feature	205,181 ' 2.0 "						4.2	Tap
Weld	205,184 ' 4.5 "	3 ' 0.0 "					4.2	
Weld	205,187 ' 4.5 "	1 ' 11.4 "					4.2	
Feature	205,188 ' 7.2 "						4.2	Stopple
Weld	205,189 ' 3.9 "	54 ' 0.5 "					4.2	
Weld	205,243 ' 4.4 "	58 ' 8.3 "					4.2	
Weld	205,302 ' 0.7 "	30,557 ' 4.9 "					3.5	
Marker	216,527 ' 0.0 "						0.0	Magnet 13 21566+04
Marker	221,889 ' 0.0 "						0.0	Magnet 14 21619+12
Marker	226,669 ' 0.0 "						0.0	LC A-24 21667+14
Marker	232,010 ' 0.0 "						0.0	Magnet 15 21720+45
Weld	235,859 ' 5.6 "	58 ' 6.3 "					3.5	
Weld	235,917 ' 11.9 "	50 ' 5.7 "					3.5	
Weld	235,968 ' 5.6 "	38 ' 2.8 "					3.4	
D- 11	235,969 ' 5.0 "		0 ' 11.4 "	4	39	0 ' 0.7 "	3.3	
Weld	236,006 ' 8.4 "	58 ' 3.3 "					3.4	
Weld	236,064 ' 11.7 "	58 ' 11.4 "					3.4	
Weld	236,123 ' 11.1 "	4,772 ' 10.2 "					3.5	

Flaw List

11/03/2007

4769.02

Dixie Pipeline Co.

Hattiesburg - Demopolis

Event	Wheel Count	Joint Length	Distance from Weld	Orientation Degree	Depth	Defect Length	Speed	Comments
Marker	239,064 ' 0.0 "						0.0	Magnet 16 21776+50
Weld	240,896 ' 9.3 "	37 ' 0.0 "					4.1	
Weld	240,933 ' 9.3 "	50 ' 6.8 "					4.0	
Weld	240,984 ' 4.1 "	95 ' 7.7 "					4.1	
Feature	241,000 ' 0.0 "						4.0	Begin Casing
Feature	241,070 ' 0.0 "						4.0	End Casing
Weld	241,079 ' 11.8 "	58 ' 1.3 "					4.0	
Weld	241,138 ' 1.1 "	54 ' 3.9 "					4.1	
Weld	241,192 ' 5.0 "	1,286 ' 6.5 "					4.1	
Weld	242,478 ' 11.5 "	46 ' 3.8 "					4.1	
Weld	242,525 ' 3.3 "	42 ' 9.6 "					4.1	
Weld	242,568 ' 0.9 "	136 ' 5.6 "					4.1	
Feature	242,579 ' 9.1 "						4.0	Begin Casing
Feature	242,676 ' 5.0 "						4.0	End Casing
Weld	242,704 ' 6.5 "	29 ' 0.8 "					4.0	
Weld	242,733 ' 7.3 "	42 ' 2.1 "					4.0	
Weld	242,775 ' 9.4 "	49 ' 10.9 "					4.1	
Weld	242,825 ' 8.3 "	48 ' 1.5 "					4.0	
Weld	242,873 ' 9.8 "	46 ' 10.2 "					4.0	
Weld	242,920 ' 8.0 "	58 ' 8.9 "					4.0	
D- 12	242,967 ' 11.0 "		47 ' 3.0 "	10	22	0 ' 1.9 "	4.0	
Weld	242,979 ' 4.9 "	47 ' 10.7 "					4.1	
Weld	243,027 ' 3.6 "	58 ' 0.0 "					4.0	
Weld	243,085 ' 3.6 "	231 ' 5.3 "					4.0	
Weld	243,316 ' 8.9 "	56 ' 0.8 "					4.0	
Weld	243,372 ' 9.7 "	54 ' 11.0 "					4.0	
Weld	243,427 ' 8.7 "	58 ' 4.0 "					4.1	
D- 13	243,480 ' 5.4 "		52 ' 8.7 "	8	27	0 ' 1.2 "	4.0	
Weld	243,486 ' 0.7 "	54 ' 7.2 "					4.0	
Weld	243,540 ' 7.9 "	57 ' 2.9 "					4.1	
Weld	243,597 ' 10.8 "	9,026 ' 3.3 "					4.0	
Weld	252,624 ' 2.1 "	53 ' 4.3 "					4.2	
Weld	252,677 ' 6.4 "	34 ' 8.6 "					4.2	
Weld	252,712 ' 3.0 "	1 ' 11.3 "					4.4	
Feature	252,713 ' 3.2 "						4.3	Stopple
Weld	252,714 ' 2.3 "	18 ' 11.8 "					4.4	
Feature	252,720 ' 6.7 "						4.3	Tap

Flaw List

Event	Wheel Count	Joint Length	Distance from Weld	Orientation Degree	Depth	Defect Length	Speed	Comments
Weld	252,733 ' 2.1 "	21 ' 11.5 "					4.2	
Weld	252,755 ' 1.6 "	5 ' 0.1 "					4.6	
Weld	252,760 ' 1.7 "	45 ' 1.0 "					5.0	
Marker	252,779 ' 0.0 "						0.0	Valve
Weld	252,805 ' 2.7 "	42 ' 1.1 "					4.3	
Weld	252,847 ' 3.8 "	59 ' 0.6 "					4.3	
Weld	252,906 ' 4.4 "	7 ' 7.5 "					4.3	
Feature	252,907 ' 9.7 "						4.3	Tap
Weld	252,913 ' 11.9 "	1 ' 11.1 "					4.4	
Feature	252,915 ' 0.2 "						4.4	Stopple
Weld	252,915 ' 11.0 "	40 ' 7.5 "					4.4	
Weld	252,956 ' 6.5 "	57 ' 10.5 "					4.3	
Weld	253,014 ' 5.0 "	31,892 ' 6.9 "					4.3	
Marker	258,090 ' 0.0 "						0.0	LC A-26 21983+24
Marker	263,101 ' 0.0 "						0.0	LC A-27 22032+62 ?
Marker	263,158 ' 0.0 "						0.0	LC A-27 22032+62 ?
Marker	268,373 ' 0.0 "						0.0	Magnet 17 22085+73
Marker	273,631 ' 0.0 "						0.0	Magnet 18 22138+53
Marker	282,762 ' 0.0 "						0.0	Magnet 19 22191+33
Weld	284,906 ' 11.9 "	59 ' 0.5 "					3.4	
Weld	284,966 ' 0.4 "	58 ' 9.1 "					3.4	
Weld	285,024 ' 9.5 "	152 ' 1.3 "					3.5	
Marker	285,058 ' 0.0 "						0.0	LC A-28 22253+10
Feature	285,065 ' 8.9 "						3.4	Begin Casing
Feature	285,143 ' 8.3 "						3.5	End Casing
Weld	285,176 ' 10.8 "	56 ' 1.6 "					3.4	
Weld	285,233 ' 0.4 "	58 ' 9.3 "					3.5	
Weld	285,291 ' 9.7 "	15,747 ' 3.8 "					3.4	
Marker	291,219 ' 0.0 "						0.0	Valve
Marker	295,278 ' 0.0 "						0.0	LC A-29 22355+80 ?
Marker	295,332 ' 0.0 "						0.0	LC A-29 22355+80 ?
Marker	300,988 ' 0.0 "						0.0	LC A-30 22413+05
Weld	301,039 ' 1.5 "	58 ' 2.3 "					3.3	
Weld	301,097 ' 3.8 "	59 ' 0.0 "					3.3	
Weld	301,156 ' 3.8 "	50 ' 6.1 "					3.2	
D- 14	301,200 ' 8.1 "		44 ' 4.3 "	7	23	0 ' 0.2 "	3.3	
Weld	301,206 ' 9.9 "	59 ' 0.8 "					3.3	

Flaw List

Event	Wheel Count	Joint Length	Distance from Weld	Orientation Degree	Depth	Defect Length	Speed	Comments
Weld	301,265 ' 10.7 "	58 ' 8.0 "					3.3	
Weld	301,324 ' 6.7 "	9,182 ' 3.1 "					3.4	
Marker	306,435 ' 6.0 "						0.0	Valve
Weld	310,506 ' 9.8 "	42 ' 6.9 "					3.6	
Weld	310,549 ' 4.7 "	56 ' 1.4 "					3.5	
Weld	310,605 ' 6.1 "	45 ' 1.9 "					3.5	
D- 15	310,633 ' 5.9 "		27 ' 11.8 "	4	36	0 ' 0.8 "	3.5	
Weld	310,650 ' 8.0 "	58 ' 2.9 "					3.5	
Weld	310,708 ' 10.9 "	51 ' 8.8 "					3.6	
Weld	310,760 ' 7.7 "	15,404 ' 10.2 "					3.5	
Marker	312,678 ' 0.0 "						0.0	LC A-31 22530+30
Marker	317,190 ' 0.0 "						0.0	Magnet 20 22575+67
Marker	321,561 ' 0.0 "						0.0	LC A-32 22619+05
Marker	324,487 ' 0.0 "						0.0	LC A-33 22648+77
Weld	326,165 ' 5.9 "	44 ' 11.9 "					3.4	
Weld	326,210 ' 5.8 "	58 ' 8.0 "					3.5	
Weld	326,269 ' 1.8 "	52 ' 8.9 "					3.5	
D- 16	326,319 ' 11.3 "		50 ' 9.5 "	7	34	0 ' 0.4 "	3.5	
Weld	326,321 ' 10.7 "	55 ' 0.3 "					3.5	
Weld	326,376 ' 11.0 "	58 ' 8.5 "					3.5	
Weld	326,435 ' 7.5 "	21,626 ' 8.3 "					3.5	
Marker	329,957 ' 0.0 "						0.0	Magnet 22 22703+43
Marker	333,561 ' 0.0 "						0.0	LC A-34 22739+31
Marker	340,737 ' 0.0 "						0.0	LC A-35 22811+62
Marker	346,555 ' 0.0 "						0.0	LC A-36 MP 433.00
Weld	348,062 ' 3.8 "	58 ' 9.8 "					3.7	
Weld	348,121 ' 1.6 "	58 ' 4.6 "					3.8	
Weld	348,179 ' 6.2 "	53 ' 5.8 "					3.7	
D- 17	348,226 ' 5.9 "		46 ' 11.7 "	4	21	0 ' 0.4 "	3.7	
Weld	348,233 ' 0.0 "	59 ' 0.7 "					3.7	
Weld	348,292 ' 0.7 "	52 ' 3.6 "					3.7	
Weld	348,344 ' 4.3 "	7,267 ' 0.3 "					3.8	
Marker	351,401 ' 0.0 "						0.0	LC A-37 22918+77
Weld	355,611 ' 4.6 "	58 ' 9.0 "					3.5	
Weld	355,670 ' 1.6 "	53 ' 9.5 "					3.4	
Weld	355,723 ' 11.1 "	42 ' 1.3 "					3.3	
D- 18	355,763 ' 2.1 "		39 ' 3.0 "	4	27	0 ' 0.4 "	3.4	

Flaw List

Event	Wheel Count	Joint Length	Distance from Weld	Orientation Degree	Depth	Defect Length	Speed	Comments
Weld	355,766 ' 0.4 "	58 ' 6.9 "					3.3	
Weld	355,824 ' 7.3 "	26 ' 9.6 "					3.4	
Weld	355,851 ' 4.9 "	2 ' 6.7 "					3.4	Begin Sleeve
Weld	355,853 ' 11.6 "	1,339 ' 11.1 "					3.4	End Sleeve
Weld	357,193 ' 10.7 "	58 ' 5.9 "					3.8	
Weld	357,252 ' 4.6 "	58 ' 7.0 "					3.5	
Weld	357,310 ' 11.6 "	57 ' 11.8 "					3.4	
D- 19	357,329 ' 3.9 "		18 ' 4.3 "	4	22	0 ' 2.2 "	3.5	
Weld	357,368 ' 11.4 "	57 ' 6.9 "					3.5	
Weld	357,426 ' 6.3 "	58 ' 8.5 "					3.3	
Weld	357,485 ' 2.8 "	11,467 ' 1.4 "					3.5	
Marker	359,252 ' 0.0 "						0.0	Magnet 23 23004+36
Marker	363,742 ' 0.0 "						0.0	LC A-39 23056+67
Weld	368,952 ' 4.2 "	7 ' 5.2 "					3.6	
Weld	368,959 ' 9.4 "	14 ' 11.6 "					3.5	
Weld	368,974 ' 9.0 "	1 ' 10.8 "					3.4	
Feature	368,975 ' 9.0 "						3.6	Stopple
Weld	368,976 ' 7.8 "	28 ' 9.2 "					3.9	
Feature	368,983 ' 1.3 "						3.3	Tap
Weld	369,005 ' 5.0 "	13 ' 8.9 "					3.5	
Weld	369,019 ' 1.9 "	5 ' 2.3 "					3.5	
Weld	369,024 ' 4.2 "	50 ' 0.3 "					3.9	
Marker	369,048 ' 0.0 "						0.0	Valve
Weld	369,074 ' 4.5 "	4 ' 11.3 "					4.0	
Weld	369,079 ' 3.8 "	16 ' 11.7 "					3.5	
Weld	369,096 ' 3.5 "	14 ' 11.2 "					3.4	
Feature	369,107 ' 3.6 "						3.3	Tap
Weld	369,111 ' 2.7 "	1 ' 11.4 "					3.3	
Weld	369,113 ' 2.1 "	1 ' 10.9 "					3.3	
Feature	369,114 ' 2.8 "						3.3	Stopple
Weld	369,115 ' 1.0 "	44 ' 4.8 "					3.8	
Weld	369,159 ' 5.8 "	21 ' 1.4 "					3.7	
Weld	369,180 ' 7.2 "	14,490 ' 0.0 "					3.7	
Marker	374,366 ' 0.0 "						0.0	LC A-40 23149+42
Marker	379,939 ' 0.0 "						0.0	LC A-41 23205+35
Weld	383,670 ' 7.2 "	59 ' 7.2 "					3.4	
Weld	383,730 ' 2.4 "	48 ' 9.1 "					3.4	

Flaw List

11/03/2007

4769.02

Dixie Pipeline Co.

Hattiesburg - Demopolis

Event	Wheel Count	Joint Length	Distance from Weld	Orientation Degree	Depth	Defect Length	Speed	Comments
Weld	383,778 ' 11.5 "	116 ' 7.0 "					3.3	
Feature	383,788 ' 0.0 "						3.4	Begin Casing
Feature	383,888 ' 7.0 "						3.4	End Casing
Weld	383,895 ' 6.5 "	40 ' 9.4 "					3.3	
Weld	383,936 ' 3.9 "	58 ' 9.7 "					3.4	
Weld	383,995 ' 1.6 "	2,438 ' 8.6 "					3.3	
Weld	386,433 ' 10.2 "	57 ' 0.1 "					3.3	
Weld	386,490 ' 10.3 "	55 ' 0.1 "					3.4	
Weld	386,545 ' 10.4 "	46 ' 9.1 "					3.4	
D- 20	386,589 ' 8.9 "		43 ' 10.5 "	8	28	0 ' 0.4 "	3.4	
Weld	386,592 ' 7.5 "	43 ' 6.0 "					3.4	
Weld	386,636 ' 1.5 "	53 ' 2.2 "					3.4	
Weld	386,689 ' 3.7 "	54 ' 8.2 "					3.4	
Weld	386,743 ' 11.9 "	39 ' 1.0 "					3.5	
Weld	386,783 ' 0.9 "	57 ' 10.0 "					3.5	
Weld	386,840 ' 10.9 "	58 ' 9.2 "					3.3	
D- 21	386,894 ' 11.3 "		54 ' 0.4 "	7	27	0 ' 1.1 "	3.2	
Weld	386,899 ' 8.1 "	58 ' 3.4 "					3.6	
Weld	386,957 ' 11.5 "	59 ' 2.3 "					3.9	
Weld	387,017 ' 1.8 "	2,817 ' 11.4 "					3.4	
Marker	389,415 ' 0.0 "						0.0	LC A-42 23300+64
Weld	389,835 ' 1.2 "	59 ' 1.0 "					3.4	
Weld	389,894 ' 2.2 "	58 ' 0.4 "					3.4	
Weld	389,952 ' 2.6 "	45 ' 9.9 "					3.4	
D- 22	389,985 ' 9.1 "		33 ' 6.5 "	7	30	0 ' 1.9 "	3.4	
D- 23	389,986 ' 2.9 "		34 ' 0.3 "	7	21	0 ' 2.0 "	3.4	
Weld	389,998 ' 0.5 "	43 ' 10.4 "					3.4	
Weld	390,041 ' 10.9 "	50 ' 8.1 "					3.4	
Weld	390,092 ' 7.0 "	624 ' 2.9 "					3.4	
Weld	390,716 ' 9.9 "	58 ' 3.8 "					3.4	
Weld	390,775 ' 1.7 "	58 ' 8.7 "					3.3	
Weld	390,833 ' 10.4 "	58 ' 5.7 "					3.3	
D- 24	390,860 ' 10.7 "		27 ' 0.3 "	8	36	0 ' 3.8 "	3.3	
D- 25	390,861 ' 6.8 "		27 ' 8.4 "	8	23	0 ' 0.4 "	3.7	
Weld	390,892 ' 4.1 "	42 ' 5.2 "					3.9	
Weld	390,934 ' 9.3 "	58 ' 2.2 "					3.5	
Weld	390,992 ' 11.5 "	1,908 ' 5.7 "						

Flaw List

Dixie Pipeline Co.

Hattiesburg - Demopolis

Event	Wheel Count		Joint Length		Distance from Weld	Orientation Degree	Depth	Defect Length	Speed	Comments
Weld	392,901 '	5.2 "	49 '	11.6 "					3.4	
Weld	392,951 '	4.8 "	58 '	7.1 "					3.4	
Weld	393,009 '	11.9 "	134 '	6.4 "					3.4	
Feature	393,021 '	0.0 "							3.4	Begin Casing
Feature	393,138 '	0.0 "							3.4	End Casing
Weld	393,144 '	6.3 "	21 '	4.7 "					3.3	
Weld	393,165 '	11.0 "	2 '	7.0 "					3.7	
Weld	393,168 '	6.0 "	8,622 '	5.5 "					3.6	
Marker	396,077 '	0.0 "							0.0	LC A-43 23367+66
Weld	401,790 '	11.5 "	58 '	5.8 "					3.3	
Weld	401,849 '	5.3 "	5 '	8.4 "					3.4	
Weld	401,855 '	1.7 "	1 '	11.5 "					3.3	
Feature	401,856 '	2.5 "							3.3	Stopple
Weld	401,857 '	1.2 "	51 '	7.8 "					3.3	
Feature	401,865 '	4.3 "							3.3	Tap
Weld	401,908 '	9.0 "	13 '	9.5 "					3.4	
Weld	401,922 '	6.5 "	3 '	5.1 "					3.8	
Weld	401,925 '	11.6 "	679 '	6.2 "					4.0	
Marker	401,958 '	5.0 "							0.0	Valve
Marker	402,258 '	9.0 "							0.0	Valve
Marker	402,572 '	7.0 "							0.0	Valve
Weld	402,605 '	5.8 "	3 '	6.8 "					4.1	
Weld	402,609 '	0.6 "	21 '	9.3 "					4.1	
Weld	402,630 '	9.9 "	26 '	1.6 "					4.1	
Feature	402,649 '	5.7 "							4.1	Tap
Weld	402,656 '	11.5 "	1 '	11.5 "					4.1	
Feature	402,658 '	0.0 "							4.1	Stopple
Weld	402,658 '	11.0 "	7 '	4.7 "					4.1	
Weld	402,666 '	3.7 "	38 '	6.9 "					4.1	
Weld	402,704 '	10.6 "	6,233 '	6.3 "					4.1	
Weld	408,938 '	4.9 "	58 '	10.8 "					3.4	
Weld	408,997 '	3.7 "	37 '	7.1 "					3.4	
Weld	409,034 '	10.8 "	118 '	10.5 "					3.4	
Feature	409,072 '	6.0 "							3.4	Begin Casing
Feature	409,133 '	4.5 "							3.4	End Casing
Weld	409,153 '	9.3 "	39 '	1.4 "					3.4	
Weld	409,192 '	10.7 "	58 '	1.1 "					3.3	

Flaw List

Dixie Pipeline Co.

Hattiesburg - Demopolis

Event	Wheel Count		Joint Length		Distance from Weld	Orientation Degree	Depth	Defect Length	Speed	Comments
Weld	409,250 '	11.8 "	14,726 '	7.5 "					3.4	
Marker	414,546 '	0.0 "							0.0	Magnet 24 23553+66
Marker	419,070 '	0.0 "							0.0	Magnet 25 23598+98
Marker	423,975 '	0.0 "							0.0	Valve
Weld	423,977 '	7.3 "	11 '	8.7 "					3.7	
Weld	423,989 '	4.0 "	170 '	7.9 "					3.7	
Feature	424,004 '	5.0 "							3.6	Begin Casing
Feature	424,125 '	4.0 "							3.6	End Casing
Weld	424,159 '	11.9 "	57 '	5.5 "					3.6	
Weld	424,217 '	5.4 "	58 '	2.5 "					3.6	
Weld	424,275 '	7.9 "	37,262 '	10.3 "					3.6	
Marker	429,183 '	0.0 "							0.0	Magnet 26 23700+70
Marker	434,574 '	0.0 "							0.0	LC A-44 MP 450.00
Marker	439,664 '	0.0 "							0.0	Magnet 27 23805+90
Marker	445,117 '	0.0 "							0.0	Magnet 28 23860+60
Marker	450,332 '	0.0 "							0.0	Magnet 29 23912+77
Marker	456,550 '	0.0 "							0.0	Magnet 30 23975+02
Weld	461,538 '	6.2 "	57 '	10.2 "					3.5	
Weld	461,596 '	4.4 "	40 '	7.7 "					3.5	
Weld	461,637 '	0.1 "	173 '	9.9 "					3.4	
Feature	461,642 '	7.0 "							3.5	Begin Casing
Feature	461,761 '	8.0 "							3.5	End Casing
Weld	461,810 '	10.0 "	6 '	1.2 "					3.5	
Weld	461,816 '	11.2 "	56 '	2.7 "					3.5	
Weld	461,873 '	1.9 "	132 '	0.5 "					3.5	
Weld	462,005 '	2.4 "	35 '	9.0 "					3.5	
Weld	462,040 '	11.4 "	15 '	4.7 "					3.5	
Weld	462,056 '	4.1 "	1 '	10.6 "					3.4	
Feature	462,057 '	5.0 "							3.4	Stopple
Weld	462,058 '	2.7 "	41 '	1.8 "					3.8	
Feature	462,064 '	6.4 "							3.4	Tap
Weld	462,099 '	4.5 "	58 '	1.5 "					3.5	
Weld	462,157 '	6.0 "	24 '	5.5 "					3.5	
Weld	462,181 '	11.5 "	46 '	7.8 "					4.1	
Marker	462,205 '	6.0 "							0.0	Valve
Weld	462,228 '	7.3 "	5 '	8.7 "					4.1	
Weld	462,234 '	4.0 "	41 '	7.2 "					3.9	

Flaw List

Dixie Pipeline Co.

Hattiesburg - Demopolis

Event	Wheel Count		Joint Length		Distance from Weld	Orientation Degree	Depth	Defect Length	Speed	Comments
Weld	462,275 '	11.2 "	23 '	6.9 "					3.5	
Feature	462,293 '	11.5 "							3.5	Tap
Weld	462,299 '	6.1 "	1 '	11.2 "					3.4	
Feature	462,300 '	6.0 "							3.4	Stopple
Weld	462,301 '	5.3 "	30 '	11.7 "					3.4	
Weld	462,332 '	5.0 "	57 '	5.5 "					3.5	
Weld	462,389 '	10.5 "	8,437 '	0.3 "					3.5	
Marker	467,927 '	0.0 "							0.0	LC A-45 24088+76
Weld	470,826 '	10.8 "	58 '	4.5 "					3.5	
Weld	470,885 '	3.3 "	53 '	4.9 "					3.5	
Weld	470,938 '	8.2 "	162 '	11.9 "					3.4	
Feature	470,979 '	0.0 "							3.5	Begin Casing
Feature	471,061 '	7.0 "							3.4	End Casing
Weld	471,101 '	8.1 "	59 '	1.5 "					3.5	
Weld	471,160 '	9.6 "	58 '	11.2 "					3.5	
Weld	471,219 '	8.8 "	1,412 '	4.5 "					3.5	
Weld	472,632 '	1.3 "	55 '	7.1 "					3.5	
Weld	472,687 '	8.4 "	42 '	1.8 "					3.4	
Weld	472,729 '	10.2 "	115 '	7.7 "					3.4	
Feature	472,755 '	5.0 "							3.5	Begin Casing
Feature	472,836 '	4.0 "							3.5	End Casing
Weld	472,845 '	5.9 "	58 '	6.8 "					3.4	
Weld	472,904 '	0.7 "	58 '	11.2 "					3.7	
Weld	472,962 '	11.9 "	6,772 '	8.6 "					3.4	
Marker	476,310 '	0.0 "							0.0	LC A-46 24173+02
Weld	479,735 '	8.5 "	58 '	6.0 "					3.5	
Weld	479,794 '	2.5 "	41 '	3.6 "					3.5	
Weld	479,835 '	6.1 "	106 '	8.1 "					3.4	
Feature	479,844 '	9.0 "							3.4	Begin Casing
Feature	479,925 '	5.0 "							3.4	End Casing
Weld	479,942 '	2.2 "	58 '	4.8 "					3.5	
Weld	480,000 '	7.0 "	59 '	1.7 "					3.5	
Weld	480,059 '	8.7 "	10,252 '	3.6 "					3.5	
Marker	485,076 '	0.0 "							0.0	Magnet 31 24260+36
Weld	490,312 '	0.3 "	58 '	4.5 "					3.5	
Weld	490,370 '	4.8 "	58 '	4.9 "					3.5	
Weld	490,428 '	9.7 "	107 '	5.7 "					3.5	

Flaw List

Dixie Pipeline Co.

Hattiesburg - Demopolis

Event	Wheel Count	Joint Length	Distance from Weld	Orientation Degree	Depth	Defect Length	Speed	Comments
Feature	490,449 ' 0.0 "						3.5	Begin Casing
Feature	490,528 ' 8.0 "						3.5	End Casing
Weld	490,536 ' 3.4 "	41 ' 10.6 "					3.6	
Weld	490,578 ' 2.0 "	54 ' 8.6 "					3.6	
Weld	490,632 ' 10.6 "	301 ' 0.1 "					3.5	
Weld	490,933 ' 10.7 "	58 ' 5.8 "					3.5	
Weld	490,992 ' 4.5 "	37 ' 8.7 "					3.5	
Weld	491,030 ' 1.2 "	16 ' 9.0 "					3.5	
D- 26	491,046 ' 2.9 "		16 ' 1.7 "	1	28	0 ' 0.6 "	3.5	
D- 27	491,046 ' 5.1 "		16 ' 3.9 "	1	24	0 ' 0.8 "	3.5	
Weld	491,046 ' 10.2 "	54 ' 7.1 "					3.5	
Weld	491,101 ' 5.3 "	58 ' 5.2 "					3.5	
Weld	491,159 ' 10.5 "	37,359 ' 3.3 "					3.5	
Marker	493,578 ' 0.0 "						0.0	LC A-47 MP 461.00
Marker	496,715 ' 0.0 "						0.0	Magnet 32 24394+42
Marker	502,073 ' 0.0 "						0.0	Magnet 33 24430+65
Marker	506,056 ' 0.0 "						0.0	LC A-48 24470+50
Marker	511,634 ' 0.0 "						0.0	LC A-49 24513+07
Marker	515,549 ' 0.0 "						0.0	Magnet 34 24565+67
Marker	519,421 ' 0.0 "						0.0	Magnet 35 24604+44
Marker	523,319 ' 0.0 "						0.0	LC A-50 MP 467.00
Weld	528,519 ' 1.8 "	58 ' 6.0 "					3.4	
Weld	528,577 ' 7.8 "	57 ' 10.3 "					3.4	
Weld	528,635 ' 6.1 "	57 ' 9.2 "					3.4	
D- 28	528,676 ' 11.6 "		41 ' 5.5 "	4	25	0 ' 0.4 "	3.3	
Weld	528,693 ' 3.3 "	58 ' 7.8 "					3.4	
Weld	528,751 ' 11.1 "	58 ' 9.6 "					3.5	
Weld	528,810 ' 8.7 "	28,159 ' 11.9 "					3.4	
Marker	530,257 ' 0.0 "						0.0	LC A-51 24712+95
Marker	534,533 ' 0.0 "						0.0	Valve
Marker	539,812 ' 0.0 "						0.0	Magnet 36 24808+45
Marker	545,324 ' 0.0 "						0.0	LC A-52 24862+75
Marker	553,368 ' 0.0 "						0.0	Magnet 37 24914+05
Marker	554,923 ' 0.0 "						0.0	Magnet 38 24972+47
Weld	556,970 ' 8.6 "	44 ' 2.6 "					3.4	
Weld	557,014 ' 11.2 "	22 ' 5.3 "					3.4	
Weld	557,037 ' 4.5 "	1 ' 11.3 "					3.4	

Flaw List

Event	Wheel Count	Joint Length	Distance from Weld	Orientation Degree	Depth	Defect Length	Speed	Comments
Feature	557,038 ' 5.0 "						3.4	Stopple
Weld	557,039 ' 3.8 "	34 ' 7.3 "					3.4	
Feature	557,045 ' 8.9 "						3.4	Tap
Weld	557,073 ' 11.1 "	48 ' 4.9 "					3.4	
Weld	557,122 ' 4.0 "	19 ' 3.5 "					3.8	
D- 29	557,140 ' 5.2 "		18 ' 1.2 "	1	22	0 ' 0.5 "	4.2	
D- 30	557,140 ' 8.7 "		18 ' 4.7 "	1	25	0 ' 0.7 "	4.1	
Weld	557,141 ' 7.5 "	3 ' 9.7 "					4.2	
Marker	557,143 ' 7.0 "						0.0	Valve
Weld	557,145 ' 5.2 "	19 ' 7.4 "					4.1	
Weld	557,165 ' 0.6 "	11 ' 2.4 "					4.0	
Weld	557,176 ' 3.0 "	18 ' 1.8 "					3.4	
Feature	557,188 ' 5.4 "						3.4	Tap
Weld	557,194 ' 4.8 "	1 ' 11.4 "					3.4	
Feature	557,195 ' 7.9 "						3.3	Stopple
Weld	557,196 ' 4.2 "	24 ' 5.7 "					3.3	
Weld	557,220 ' 9.9 "	58 ' 9.7 "					3.4	
Weld	557,279 ' 7.6 "	9,901 ' 2.9 "					3.4	
Marker	562,434 ' 0.0 "						0.0	Magnet 39 25034+37
Weld	567,180 ' 10.5 "	29 ' 2.8 "					3.4	
Weld	567,210 ' 1.3 "	42 ' 5.6 "					3.5	
Weld	567,252 ' 6.9 "	168 ' 10.8 "					3.4	
Feature	567,259 ' 7.0 "						3.4	Begin Casing
Feature	567,410 ' 7.0 "						3.4	End Casing
Weld	567,421 ' 5.7 "	36 ' 2.3 "					3.4	
Weld	567,457 ' 8.0 "	56 ' 7.5 "					3.4	
Weld	567,514 ' 3.5 "	39,335 ' 1.0 "					3.5	
Marker	573,157 ' 0.0 "						0.0	LC A-53 25141+42
Marker	578,391 ' 0.0 "						0.0	Magnet 40 25193+81
Marker	582,065 ' 0.0 "						0.0	LC A-54 25230+29
Marker	586,270 ' 0.0 "						0.0	Valve
Marker	591,763 ' 0.0 "						0.0	Magnet 41 25325+85
Marker	594,883 ' 0.0 "						0.0	LC A-55 25366+15
Marker	601,893 ' 0.0 "						0.0	LC A-56 25428+18
Weld	606,849 ' 4.5 "	42 ' 11.6 "					3.4	
Weld	606,892 ' 4.1 "	28 ' 1.3 "					3.4	
Weld	606,920 ' 5.4 "	116 ' 3.6 "					3.4	

Flaw List

Dixie Pipeline Co.

Hattiesburg - Demopolis

Event	Wheel Count		Joint Length		Distance from Weld		Orientation Degree	Depth	Defect Length		Speed	Comments
Feature	606,942 '	0.0 "									3.4	Begin Casing
Feature	607,022 '	8.0 "									3.4	End Casing
Weld	607,036 '	9.0 "	36 '	0.9 "							3.4	
Weld	607,072 '	9.9 "	44 '	8.1 "							3.4	
Weld	607,117 '	6.0 "	4,378 '	6.2 "							3.4	
Weld	611,496 '	0.2 "	41 '	8.8 "							3.7	
Weld	611,537 '	9.0 "	28 '	10.4 "							3.4	
Weld	611,566 '	7.4 "	154 '	1.6 "							3.4	
Feature	611,614 '	3.0 "									3.7	Begin Casing
Feature	611,717 '	0.0 "									3.4	End Casing
Weld	611,720 '	9.0 "	30 '	5.6 "							3.4	
Weld	611,751 '	2.6 "	43 '	6.2 "							3.3	
Weld	611,794 '	8.8 "	7,550 '	5.0 "							3.8	
Marker	615,709 '	0.0 "									0.0	Magnet 42 25564+41
Weld	619,345 '	1.8 "	50 '	3.8 "							2.7	
Weld	619,395 '	5.6 "	60 '	5.3 "							2.7	
Weld	619,455 '	10.9 "	156 '	11.6 "							2.7	
Feature	619,481 '	8.0 "									2.7	Begin Casing
Feature	619,607 '	5.0 "									2.7	End Casing
Weld	619,612 '	10.5 "	10 '	0.0 "							2.7	
Weld	619,622 '	10.5 "	37 '	6.2 "							2.7	
D- 31	619,625 '	1.2 "			2 '	2.7 "	5	39	0 '	0.3 "	2.7	
Weld	619,660 '	4.7 "	52 '	9.0 "							2.7	
Weld	619,713 '	1.7 "	49 '	0.1 "							2.8	
Weld	619,762 '	1.8 "	7,077 '	0.4 "							2.7	
Marker	623,281 '	0.0 "									0.0	Magnet 43 25640+27
Weld	626,839 '	2.2 "	59 '	3.7 "							2.7	
Weld	626,898 '	5.9 "	49 '	0.9 "							2.7	
Weld	626,947 '	6.8 "	340 '	7.0 "							2.7	
Feature	626,962 '	5.0 "									2.8	Begin Casing
Feature	627,244 '	0.0 "									2.7	End Casing
Weld	627,288 '	1.8 "	58 '	2.6 "							2.6	
Weld	627,346 '	4.4 "	37 '	3.9 "							2.7	
Weld	627,383 '	8.3 "	364 '	7.8 "							2.7	
Weld	627,748 '	4.1 "	58 '	8.2 "							2.7	
Weld	627,807 '	0.3 "	58 '	11.5 "							2.7	
Weld	627,865 '	11.8 "	58 '	9.0 "							2.6	

Flaw List

Dixie Pipeline Co.

Hattiesburg - Demopolis

Event	Wheel Count	Joint Length	Distance from Weld	Orientation Degree	Depth	Defect Length	Speed	Comments
D- 32	627,891 ' 9.6 "		25 ' 9.8 "	10	25	0 ' 1.5 "	2.7	
Weld	627,924 ' 8.8 "	54 ' 2.3 "					2.6	
Weld	627,978 ' 11.1 "	50 ' 4.4 "					2.7	
Weld	628,029 ' 3.5 "	6,982 ' 8.5 "					2.7	
Marker	633,046 ' 0.0 "						0.0	Magnet 44 25732+67
Marker	635,012 ' 0.0 "						0.0	Trap Demopolis

PR Flaw List

11/03/2007

4769.02

Dixie Pipeline Co.

Hattiesburg - Demopolis

Event	Wheel Count		Distance from Weld		Depth	Defect Length		PR Ratio	Calc. Pres.	Comments
Marker	294 '	0.0 "								
Feature	466 '	0.0 "								Launch Hattiesburg
Weld	515 '	0.6 "								End Casing (BC Not Detected)
Weld	519 '	11.9 "								
Marker	522 '	0.0 "								
Weld	525 '	4.0 "								Valve
Weld	547 '	9.0 "								
Feature	566 '	7.0 "								
Feature	638 '	6.5 "								Begin Casing
Weld	647 '	7.5 "								End Casing Possible Shorted
Weld	704 '	7.3 "								
Weld	721 '	2.0 "								
Feature	923 '	7.9 "								
Weld	952 '	0.2 "								End Casing (BC Not Detected)
Weld	1,003 '	2.5 "								
Weld	1,017 '	0.4 "								
Weld	4,105 '	4.2 "								
Weld	4,162 '	7.4 "								
Weld	4,223 '	6.0 "								
D- 1	4,256 '	7.0 "	33 '	1.0 "	20	0 '	0.4 "	0.00	0	
Weld	4,284 '	5.9 "								
Weld	4,344 '	9.3 "								
Weld	4,401 '	2.1 "								
Weld	4,531 '	8.3 "								
Weld	4,591 '	3.0 "								
Weld	4,650 '	5.4 "								
Feature	4,684 '	4.7 "								
Weld	4,690 '	4.3 "								Tap
Feature	4,691 '	4.7 "								
Weld	4,692 '	2.9 "								Stopple
Weld	4,706 '	2.0 "								
Feature	4,732 '	10.1 "								
Weld	4,764 '	1.1 "								Tap
Weld	4,773 '	11.0 "								
Weld	4,829 '	3.3 "								
Marker	8,743 '	0.0 "								
Marker	12,913 '	0.0 "								LC A-1 19479+77
										LC A-2 19521+66

PR Flaw List

11/03/2007

Dixie Pipeline Co.

4769.02

Hattiesburg - Demopolis

Event	Wheel Count		Distance from Weld		Depth	Defect Length		PR Ratio	Calc. Pres.	Comments
Marker	16,031 '	0.0 "								
Marker	20,734 '	0.0 "								LC A-3 19552+97
Weld	23,769 '	0.6 "								LC A-4 19600+13
Weld	23,810 '	2.2 "								
Weld	23,849 '	1.6 "								
D- 2	23,901 '	1.3 "	51 '	11.7 "	27	0 '	0.4 "	0.00	0	
Weld	23,903 '	11.4 "								
Weld	23,961 '	11.3 "								
Weld	24,020 '	1.9 "								
Weld	24,728 '	8.2 "								
Weld	24,773 '	4.8 "								
Weld	24,830 '	10.6 "								
D- 3	24,831 '	6.7 "	0 '	8.1 "	23	0 '	2.2 "	0.00	0	
Weld	24,842 '	7.5 "								
Weld	24,891 '	2.7 "								
Weld	24,905 '	5.4 "								
Marker	25,398 '	0.0 "								
Marker	30,677 '	0.0 "								LC A-5 19653+39
Marker	34,108 '	0.0 "								LC A-6 MP 373.12 19699+70
Marker	39,116 '	0.0 "								LC A-7 19734+69
Weld	41,899 '	4.2 "								LC A-8 19784+89
Weld	41,957 '	11.7 "								
Weld	42,017 '	5.0 "								
D- 4	42,058 '	11.4 "	41 '	6.4 "	25	0 '	0.5 "	0.00	0	
Weld	42,075 '	9.7 "								
Weld	42,134 '	5.8 "								
Weld	42,193 '	3.7 "								
Weld	42,814 '	11.2 "								
Weld	42,873 '	7.2 "								
Weld	42,932 '	4.3 "								
D- 5	42,987 '	7.1 "	55 '	2.8 "	27	0 '	3.3 "	0.00	0	
Weld	42,991 '	4.2 "								
Weld	43,049 '	11.4 "								
Weld	43,108 '	8.9 "								
Marker	44,534 '	0.0 "								
Marker	49,779 '	0.0 "								Magnet 1 19839+17
Marker	54,691 '	0.0 "								Valve
										LC A-9 19941+25

PR Flaw List

11/03/2007

Dixie Pipeline Co.

4769.02

Hattiesburg - Demopolis

Event	Wheel Count		Distance from Weld		Depth	Defect Length		PR Ratio	Calc. Pres.	Comments
Marker	60,057 '	0.0 "								
Marker	64,506 '	0.0 "								LC A-10 19995+14
Weld	69,164 '	4.9 "								LC A-11 20039+85
Weld	69,221 '	9.5 "								
Weld	69,281 '	2.2 "								
D- 6	69,329 '	6.0 "	48 '	3.8 "	51	0 '	0.3 "	0.00	0	
Weld	69,339 '	5.7 "								
Feature	69,349 '	0.0 "								
Feature	69,400 '	0.0 "								Begin Casing
Weld	69,431 '	3.0 "								End Casing
D- 7	69,485 '	4.1 "	54 '	1.1 "	21	0 '	1.1 "	0.00	0	
Weld	69,489 '	7.9 "								
Weld	69,548 '	10.0 "								
Weld	69,607 '	7.2 "								
Marker	74,586 '	0.0 "								
Marker	79,539 '	0.0 "								Magnet 2 20140+44
Weld	82,524 '	5.8 "								Magnet 3 20190+97
Weld	82,582 '	5.9 "								
Weld	82,641 '	8.2 "								
Feature	82,667 '	0.0 "								
Feature	82,758 '	8.8 "								Begin Casing
Weld	82,789 '	8.5 "								End Casing
Weld	82,828 '	6.4 "								
Weld	82,887 '	6.7 "								
Marker	88,008 '	0.0 "								
Weld	95,332 '	1.0 "								Magnet 4 20276+12
Weld	95,343 '	9.5 "								
Weld	95,382 '	4.1 "								
Feature	95,401 '	0.0 "								
Feature	95,458 '	0.0 "								Begin Casing
Weld	95,504 '	1.2 "								End Casing
Weld	95,562 '	7.5 "								
Weld	95,621 '	1.2 "								
Marker	97,164 '	0.0 "								
Marker	102,754 '	0.0 "								LC A-12 20368+19
Marker	104,988 '	0.0 "								LC A-13 20414+68
Marker	109,947 '	0.0 "								Magnet 5 20446+68
										Valve

PR Flaw List

11/03/2007

Dixie Pipeline Co.

4769.02

Hattiesburg - Demopolis

Event	Wheel Count		Distance from Weld		Depth	Defect Length		PR Ratio	Calc. Pres.	Comments
Marker	114,570 '	0.0 "								
Marker	120,173 '	0.0 "								LC A-14 20542+58
Marker	125,242 '	0.0 "								LC A-15 20598+51
Weld	125,653 '	10.7 "								Magnet 6 20649+27
Weld	125,712 '	9.1 "								
Weld	125,772 '	4.1 "								
D- 8	125,804 '	3.6 "	31 '	11.5 "	27	0 '	0.6 "	0.00	0	
Weld	125,824 '	9.4 "								
Weld	125,884 '	4.3 "								
Weld	125,943 '	11.0 "								
Marker	130,915 '	0.0 "								
Marker	135,439 '	0.0 "								LC A-16 MP 392.00 20706+10
Marker	139,758 '	0.0 "								Magnet 7 20751+44
Marker	146,076 '	0.0 "								LC A-17 20794+58
Marker	151,216 '	0.0 "								Magnet 8 20851+72
Marker	156,187 '	0.0 "								Valve
Marker	161,015 '	0.0 "								Magnet 9 20959+06
Marker	164,097 '	0.0 "								LC A-18 21007+60
Marker	167,940 '	0.0 "								LC A-19 21038+34
Weld	174,061 '	11.8 "								LC A-20 21076+82
Weld	174,120 '	2.9 "								
Weld	174,178 '	5.9 "								
D- 9	174,203 '	3.5 "	24 '	9.6 "	41	0 '	1.9 "	0.00	0	
Weld	174,229 '	1.2 "								
Weld	174,288 '	1.3 "								
Weld	174,347 '	2.0 "								
Marker	174,582 '	0.0 "								
Marker	178,204 '	0.0 "								Magnet 10 21142+66
Marker	182,439 '	0.0 "								LC A-21 21180+47
Weld	187,926 '	9.3 "								LC A-22 21222+76
Weld	187,985 '	4.4 "								
Weld	188,044 '	5.4 "								
Feature	188,057 '	0.0 "								
Feature	188,149 '	0.0 "								Begin Casing
D- 10	188,200 '	11.1 "	156 '	5.7 "	24	0 '	1.8 "	0.00	0	End Casing
Weld	188,203 '	1.0 "								
Weld	188,245 '	3.5 "								

PR Flaw List

11/03/2007

Dixie Pipeline Co.

4769.02

Hattiesburg - Demopolis

Event	Wheel Count		Distance from Weld	Depth	Defect Length	PR Ratio	Calc. Pres.	Comments
Weld	188,303 '	9.9 "						
Marker	193,247 '	0.0 "						
Marker	196,708 '	0.0 "						Magnet 11 21331+46
Marker	202,495 '	0.0 "						LC A-23 21385++63
Weld	204,327 '	4.7 "						Valve
Weld	204,385 '	10.7 "						
Weld	204,414 '	4.7 "						
Feature	204,415 '	5.0 "						
Weld	204,416 '	4.1 "						Stopple
Feature	204,422 '	5.0 "						
Weld	204,444 '	9.7 "						Tap
Weld	204,454 '	7.2 "						
Weld	204,458 '	11.4 "						
Marker	204,490 '	0.0 "						
Marker	204,759 '	6.0 "						Valve
Marker	205,105 '	0.0 "						Valve
Weld	205,125 '	1.8 "						Valve
Weld	205,137 '	8.5 "						
Weld	205,142 '	2.0 "						
Feature	205,181 '	2.0 "						
Weld	205,184 '	4.5 "						Tap
Weld	205,187 '	4.5 "						
Feature	205,188 '	7.2 "						
Weld	205,189 '	3.9 "						Stopple
Weld	205,243 '	4.4 "						
Weld	205,302 '	0.7 "						
Marker	216,527 '	0.0 "						
Marker	221,889 '	0.0 "						Magnet 13 21566+04
Marker	226,669 '	0.0 "						Magnet 14 21619+12
Marker	232,010 '	0.0 "						LC A-24 21667+14
Weld	235,859 '	5.6 "						Magnet 15 21720+45
Weld	235,917 '	11.9 "						
Weld	235,968 '	5.6 "						
D- 11	235,969 '	5.0 "	0 ' 11.4 "	39	0 ' 0.7 "	0.00	0	
Weld	236,006 '	8.4 "						
Weld	236,064 '	11.7 "						
Weld	236,123 '	11.1 "						

PR Flaw List

11/03/2007

Dixie Pipeline Co.

4769.02

Hattiesburg - Demopolis

Event	Wheel Count		Distance from Weld		Depth	Defect Length		PR Ratio	Calc. Pres.	Comments
Marker	239,064 '	0.0 "								
Weld	240,896 '	9.3 "								Magnet 16 21776+50
Weld	240,933 '	9.3 "								
Weld	240,984 '	4.1 "								
Feature	241,000 '	0.0 "								
Feature	241,070 '	0.0 "								Begin Casing
Weld	241,079 '	11.8 "								End Casing
Weld	241,138 '	1.1 "								
Weld	241,192 '	5.0 "								
Weld	242,478 '	11.5 "								
Weld	242,525 '	3.3 "								
Weld	242,568 '	0.9 "								
Feature	242,579 '	9.1 "								
Feature	242,676 '	5.0 "								Begin Casing
Weld	242,704 '	6.5 "								End Casing
Weld	242,733 '	7.3 "								
Weld	242,775 '	9.4 "								
Weld	242,825 '	8.3 "								
Weld	242,873 '	9.8 "								
Weld	242,920 '	8.0 "								
D- 12	242,967 '	11.0 "	47 '	3.0 "	22	0 '	1.9 "	0.00	0	
Weld	242,979 '	4.9 "								
Weld	243,027 '	3.6 "								
Weld	243,085 '	3.6 "								
Weld	243,316 '	8.9 "								
Weld	243,372 '	9.7 "								
Weld	243,427 '	8.7 "								
D- 13	243,480 '	5.4 "	52 '	8.7 "	27	0 '	1.2 "	0.00	0	
Weld	243,486 '	0.7 "								
Weld	243,540 '	7.9 "								
Weld	243,597 '	10.8 "								
Weld	252,624 '	2.1 "								
Weld	252,677 '	6.4 "								
Weld	252,712 '	3.0 "								
Feature	252,713 '	3.2 "								
Weld	252,714 '	2.3 "								Stopple
Feature	252,720 '	6.7 "								Tap

PR Flaw List

Dixie Pipeline Co.

Hattiesburg - Demopolis

Event	Wheel Count		Distance from Weld		Depth	Defect Length		PR Ratio	Calc. Pres.	Comments
Weld	252,733 '	2.1 "								
Weld	252,755 '	1.6 "								
Weld	252,760 '	1.7 "								
Marker	252,779 '	0.0 "								
Weld	252,805 '	2.7 "								Valve
Weld	252,847 '	3.8 "								
Weld	252,906 '	4.4 "								
Feature	252,907 '	9.7 "								
Weld	252,913 '	11.9 "								Tap
Feature	252,915 '	0.2 "								
Weld	252,915 '	11.0 "								Stopple
Weld	252,956 '	6.5 "								
Weld	253,014 '	5.0 "								
Marker	258,090 '	0.0 "								
Marker	263,101 '	0.0 "								LC A-26 21983+24
Marker	263,158 '	0.0 "								LC A-27 22032+62 ? Location
Marker	268,373 '	0.0 "								LC A-27 22032+62 ? Location
Marker	273,631 '	0.0 "								Magnet 17 22085+73
Marker	282,762 '	0.0 "								Magnet 18 22138+53
Weld	284,906 '	11.9 "								Magnet 19 22191+33
Weld	284,966 '	0.4 "								
Weld	285,024 '	9.5 "								
Marker	285,058 '	0.0 "								
Feature	285,065 '	8.9 "								LC A-28 22253+10
Feature	285,143 '	8.3 "								Begin Casing
Weld	285,176 '	10.8 "								End Casing
Weld	285,233 '	0.4 "								
Weld	285,291 '	9.7 "								
Marker	291,219 '	0.0 "								
Marker	295,278 '	0.0 "								Valve
Marker	295,332 '	0.0 "								LC A-29 22355+80 ? Location
Marker	300,988 '	0.0 "								LC A-29 22355+80 ? Location
Weld	301,039 '	1.5 "								LC A-30 22413+05
Weld	301,097 '	3.8 "								
Weld	301,156 '	3.8 "								
D- 14	301,200 '	8.1 "	44 '	4.3 "	23	0 '	0.2 "	0.00	0	
Weld	301,206 '	9.9 "								

PR Flaw List

Dixie Pipeline Co.

Hattiesburg - Demopolis

Event	Wheel Count		Distance from Weld		Depth	Defect Length		PR Ratio	Calc. Pres.	Comments
Weld	301,265 '	10.7 "								
Weld	301,324 '	6.7 "								
Marker	306,435 '	6.0 "								
Weld	310,506 '	9.8 "								Valve
Weld	310,549 '	4.7 "								
Weld	310,605 '	6.1 "								
D- 15	310,633 '	5.9 "	27 '	11.8 "	36	0 '	0.8 "	0.00	0	
Weld	310,650 '	8.0 "								
Weld	310,708 '	10.9 "								
Weld	310,760 '	7.7 "								
Marker	312,678 '	0.0 "								
Marker	317,190 '	0.0 "								LC A-31 22530+30
Marker	321,561 '	0.0 "								Magnet 20 22575+67
Marker	324,487 '	0.0 "								LC A-32 22619+05
Weld	326,165 '	5.9 "								LC A-33 22648+77
Weld	326,210 '	5.8 "								
Weld	326,269 '	1.8 "								
D- 16	326,319 '	11.3 "	50 '	9.5 "	34	0 '	0.4 "	0.00	0	
Weld	326,321 '	10.7 "								
Weld	326,376 '	11.0 "								
Weld	326,435 '	7.5 "								
Marker	329,957 '	0.0 "								
Marker	333,561 '	0.0 "								Magnet 22 22703+43
Marker	340,737 '	0.0 "								LC A-34 22739+31
Marker	346,555 '	0.0 "								LC A-35 22811+62
Weld	348,062 '	3.8 "								LC A-36 MP 433.00 22869+52
Weld	348,121 '	1.6 "								
Weld	348,179 '	6.2 "								
D- 17	348,226 '	5.9 "	46 '	11.7 "	21	0 '	0.4 "	0.00	0	
Weld	348,233 '	0.0 "								
Weld	348,292 '	0.7 "								
Weld	348,344 '	4.3 "								
Marker	351,401 '	0.0 "								
Weld	355,611 '	4.6 "								LC A-37 22918+77
Weld	355,670 '	1.6 "								
Weld	355,723 '	11.1 "								
D- 18	355,763 '	2.1 "	39 '	3.0 "	27	0 '	0.4 "	0.00	0	

PR Flaw List

Dixie Pipeline Co.

Hattiesburg - Demopolis

Event	Wheel Count		Distance from Weld		Depth	Defect Length		PR Ratio	Calc. Pres.	Comments
Weld	355,766 '	0.4 "								
Weld	355,824 '	7.3 "								
Weld	355,851 '	4.9 "								
Weld	355,853 '	11.6 "								Begin Sleeve
Weld	357,193 '	10.7 "								End Sleeve
Weld	357,252 '	4.6 "								
Weld	357,310 '	11.6 "								
D- 19	357,329 '	3.9 "	18 '	4.3 "	22	0 '	2.2 "	0.00	0	
Weld	357,368 '	11.4 "								
Weld	357,426 '	6.3 "								
Weld	357,485 '	2.8 "								
Marker	359,252 '	0.0 "								
Marker	363,742 '	0.0 "								Magnet 23 23004+36
Weld	368,952 '	4.2 "								LC A-39 23056+67
Weld	368,959 '	9.4 "								
Weld	368,974 '	9.0 "								
Feature	368,975 '	9.0 "								
Weld	368,976 '	7.8 "								Stopple
Feature	368,983 '	1.3 "								
Weld	369,005 '	5.0 "								Tap
Weld	369,019 '	1.9 "								
Weld	369,024 '	4.2 "								
Marker	369,048 '	0.0 "								
Weld	369,074 '	4.5 "								Valve
Weld	369,079 '	3.8 "								
Weld	369,096 '	3.5 "								
Feature	369,107 '	3.6 "								
Weld	369,111 '	2.7 "								Tap
Weld	369,113 '	2.1 "								
Feature	369,114 '	2.8 "								
Weld	369,115 '	1.0 "								Stopple
Weld	369,159 '	5.8 "								
Weld	369,180 '	7.2 "								
Marker	374,366 '	0.0 "								
Marker	379,939 '	0.0 "								LC A-40 23149+42
Weld	383,670 '	7.2 "								LC A-41 23205+35
Weld	383,730 '	2.4 "								

PR Flaw List

Event	Wheel Count		Distance from Weld		Depth	Defect Length		PR Ratio	Calc. Pres.	Comments
Weld	383,778 '	11.5 "								
Feature	383,788 '	0.0 "								Begin Casing
Feature	383,888 '	7.0 "								End Casing
Weld	383,895 '	6.5 "								
Weld	383,936 '	3.9 "								
Weld	383,995 '	1.6 "								
Weld	386,433 '	10.2 "								
Weld	386,490 '	10.3 "								
Weld	386,545 '	10.4 "								
D- 20	386,589 '	8.9 "	43 '	10.5 "	28	0 '	0.4 "	0.00	0	
Weld	386,592 '	7.5 "								
Weld	386,636 '	1.5 "								
Weld	386,689 '	3.7 "								
Weld	386,743 '	11.9 "								
Weld	386,783 '	0.9 "								
Weld	386,840 '	10.9 "								
D- 21	386,894 '	11.3 "	54 '	0.4 "	27	0 '	1.1 "	0.00	0	
Weld	386,899 '	8.1 "								
Weld	386,957 '	11.5 "								
Weld	387,017 '	1.8 "								
Marker	389,415 '	0.0 "								LC A-42 23300+64
Weld	389,835 '	1.2 "								
Weld	389,894 '	2.2 "								
Weld	389,952 '	2.6 "								
D- 22	389,985 '	9.1 "	33 '	6.5 "	30	0 '	1.9 "	0.00	0	
D- 23	389,986 '	2.9 "	34 '	0.3 "	21	0 '	2.0 "	0.00	0	
Weld	389,998 '	0.5 "								
Weld	390,041 '	10.9 "								
Weld	390,092 '	7.0 "								
Weld	390,716 '	9.9 "								
Weld	390,775 '	1.7 "								
Weld	390,833 '	10.4 "								
D- 24	390,860 '	10.7 "	27 '	0.3 "	36	0 '	3.8 "	0.00	0	
D- 25	390,861 '	6.8 "	27 '	8.4 "	23	0 '	0.4 "	0.00	0	
Weld	390,892 '	4.1 "								
Weld	390,934 '	9.3 "								
Weld	390,992 '	11.5 "								

PR Flaw List

4769.02

Hattiesburg - Demopolis

Event	Wheel Count		Distance from Weld	Depth	Defect Length	PR Ratio	Calc. Pres.	Comments
Weld	392,901 '	5.2 "						
Weld	392,951 '	4.8 "						
Weld	393,009 '	11.9 "						
Feature	393,021 '	0.0 "						Begin Casing
Feature	393,138 '	0.0 "						End Casing
Weld	393,144 '	6.3 "						
Weld	393,165 '	11.0 "						
Weld	393,168 '	6.0 "						
Marker	396,077 '	0.0 "						LC A-43 23367+66
Weld	401,790 '	11.5 "						
Weld	401,849 '	5.3 "						
Weld	401,855 '	1.7 "						
Feature	401,856 '	2.5 "						Stopple
Weld	401,857 '	1.2 "						
Feature	401,865 '	4.3 "						Tap
Weld	401,908 '	9.0 "						
Weld	401,922 '	6.5 "						
Weld	401,925 '	11.6 "						
Marker	401,958 '	5.0 "						Valve
Marker	402,258 '	9.0 "						Valve
Marker	402,572 '	7.0 "						Valve
Weld	402,605 '	5.8 "						
Weld	402,609 '	0.6 "						
Weld	402,630 '	9.9 "						
Feature	402,649 '	5.7 "						Tap
Weld	402,656 '	11.5 "						
Feature	402,658 '	0.0 "						Stopple
Weld	402,658 '	11.0 "						
Weld	402,666 '	3.7 "						
Weld	402,704 '	10.6 "						
Weld	408,938 '	4.9 "						
Weld	408,997 '	3.7 "						
Weld	409,034 '	10.8 "						
Feature	409,072 '	6.0 "						Begin Casing
Feature	409,133 '	4.5 "						End Casing
Weld	409,153 '	9.3 "						
Weld	409,192 '	10.7 "						

PR Flaw List

Dixie Pipeline Co.

Hattiesburg - Demopolis

Event	Wheel Count		Distance from Weld	Depth	Defect Length	PR Ratio	Calc. Pres.	Comments
Weld	409,250 '	11.8 "						
Marker	414,546 '	0.0 "						
Marker	419,070 '	0.0 "						Magnet 24 23553+66
Marker	423,975 '	0.0 "						Magnet 25 23598+98
Weld	423,977 '	7.3 "						Valve
Weld	423,989 '	4.0 "						
Feature	424,004 '	5.0 "						
Feature	424,125 '	4.0 "						Begin Casing
Weld	424,159 '	11.9 "						End Casing
Weld	424,217 '	5.4 "						
Weld	424,275 '	7.9 "						
Marker	429,183 '	0.0 "						
Marker	434,574 '	0.0 "						Magnet 26 23700+70
Marker	439,664 '	0.0 "						LC A-44 MP 450.00 23754+56
Marker	445,117 '	0.0 "						Magnet 27 23805+90
Marker	450,332 '	0.0 "						Magnet 28 23860+60
Marker	456,550 '	0.0 "						Magnet 29 23912+77
Weld	461,538 '	6.2 "						Magnet 30 23975+02
Weld	461,596 '	4.4 "						
Weld	461,637 '	0.1 "						
Feature	461,642 '	7.0 "						
Feature	461,761 '	8.0 "						Begin Casing
Weld	461,810 '	10.0 "						End Casing
Weld	461,816 '	11.2 "						
Weld	461,873 '	1.9 "						
Weld	462,005 '	2.4 "						
Weld	462,040 '	11.4 "						
Weld	462,056 '	4.1 "						
Feature	462,057 '	5.0 "						
Weld	462,058 '	2.7 "						Stopple
Feature	462,064 '	6.4 "						
Weld	462,099 '	4.5 "						Tap
Weld	462,157 '	6.0 "						
Weld	462,181 '	11.5 "						
Marker	462,205 '	6.0 "						
Weld	462,228 '	7.3 "						Valve
Weld	462,234 '	4.0 "						

PR Flaw List

Dixie Pipeline Co.

Hattiesburg - Demopolis

Event	Wheel Count		Distance from Weld	Depth	Defect Length	PR Ratio	Calc. Pres.	Comments
Weld	462,275 '	11.2 "						
Feature	462,293 '	11.5 "						Tap
Weld	462,299 '	6.1 "						
Feature	462,300 '	6.0 "						Stopple
Weld	462,301 '	5.3 "						
Weld	462,332 '	5.0 "						
Weld	462,389 '	10.5 "						
Marker	467,927 '	0.0 "						LC A-45 24088+76
Weld	470,826 '	10.8 "						
Weld	470,885 '	3.3 "						
Weld	470,938 '	8.2 "						
Feature	470,979 '	0.0 "						Begin Casing
Feature	471,061 '	7.0 "						End Casing
Weld	471,101 '	8.1 "						
Weld	471,160 '	9.6 "						
Weld	471,219 '	8.8 "						
Weld	472,632 '	1.3 "						
Weld	472,687 '	8.4 "						
Weld	472,729 '	10.2 "						
Feature	472,755 '	5.0 "						Begin Casing
Feature	472,836 '	4.0 "						End Casing
Weld	472,845 '	5.9 "						
Weld	472,904 '	0.7 "						
Weld	472,962 '	11.9 "						
Marker	476,310 '	0.0 "						LC A-46 24173+02
Weld	479,735 '	8.5 "						
Weld	479,794 '	2.5 "						
Weld	479,835 '	6.1 "						
Feature	479,844 '	9.0 "						Begin Casing
Feature	479,925 '	5.0 "						End Casing
Weld	479,942 '	2.2 "						
Weld	480,000 '	7.0 "						
Weld	480,059 '	8.7 "						
Marker	485,076 '	0.0 "						Magnet 31 24260+36
Weld	490,312 '	0.3 "						
Weld	490,370 '	4.8 "						
Weld	490,428 '	9.7 "						

PR Flaw List

Dixie Pipeline Co.

Hattiesburg - Demopolis

Event	Wheel Count		Distance from Weld		Depth	Defect Length		PR Ratio	Calc. Pres.	Comments
Feature	490,449 '	0.0 "								
Feature	490,528 '	8.0 "								Begin Casing
Weld	490,536 '	3.4 "								End Casing
Weld	490,578 '	2.0 "								
Weld	490,632 '	10.6 "								
Weld	490,933 '	10.7 "								
Weld	490,992 '	4.5 "								
Weld	491,030 '	1.2 "								
D- 26	491,046 '	2.9 "	16 '	1.7 "	28	0 '	0.6 "	0.00	0	
D- 27	491,046 '	5.1 "	16 '	3.9 "	24	0 '	0.8 "	0.00	0	
Weld	491,046 '	10.2 "								
Weld	491,101 '	5.3 "								
Weld	491,159 '	10.5 "								
Marker	493,578 '	0.0 "								
Marker	496,715 '	0.0 "								LC A-47 MP 461.00 24345+56
Marker	502,073 '	0.0 "								Magnet 32 24394+42
Marker	506,056 '	0.0 "								Magnet 33 24430+65
Marker	511,634 '	0.0 "								LC A-48 24470+50
Marker	515,549 '	0.0 "								LC A-49 24513+07
Marker	519,421 '	0.0 "								Magnet 34 24565+67
Marker	523,319 '	0.0 "								Magnet 35 24604+44
Weld	528,519 '	1.8 "								LC A-50 MP 467.00 24643+43
Weld	528,577 '	7.8 "								
Weld	528,635 '	6.1 "								
D- 28	528,676 '	11.6 "	41 '	5.5 "	25	0 '	0.4 "	0.00	0	
Weld	528,693 '	3.3 "								
Weld	528,751 '	11.1 "								
Weld	528,810 '	8.7 "								
Marker	530,257 '	0.0 "								
Marker	534,533 '	0.0 "								LC A-51 24712+95
Marker	539,812 '	0.0 "								Valve
Marker	545,324 '	0.0 "								Magnet 36 24808+45
Marker	553,368 '	0.0 "								LC A-52 24862+75
Marker	554,923 '	0.0 "								Magnet 37 24914+05
Weld	556,970 '	8.6 "								Magnet 38 24972+47
Weld	557,014 '	11.2 "								
Weld	557,037 '	4.5 "								

PR Flaw List

Dixie Pipeline Co.

Hattiesburg - Demopolis

Event	Wheel Count		Distance from Weld		Depth	Defect Length		PR Ratio	Calc. Pres.	Comments
Feature	557,038 '	5.0 "								Stopple
Weld	557,039 '	3.8 "								
Feature	557,045 '	8.9 "								Tap
Weld	557,073 '	11.1 "								
Weld	557,122 '	4.0 "								
D- 29	557,140 '	5.2 "	18 '	1.2 "	22	0 '	0.5 "	0.00	0	
D- 30	557,140 '	8.7 "	18 '	4.7 "	25	0 '	0.7 "	0.00	0	
Weld	557,141 '	7.5 "								
Marker	557,143 '	7.0 "								Valve
Weld	557,145 '	5.2 "								
Weld	557,165 '	0.6 "								
Weld	557,176 '	3.0 "								
Feature	557,188 '	5.4 "								Tap
Weld	557,194 '	4.8 "								
Feature	557,195 '	7.9 "								Stopple
Weld	557,196 '	4.2 "								
Weld	557,220 '	9.9 "								
Weld	557,279 '	7.6 "								
Marker	562,434 '	0.0 "								Magnet 39 25034+37
Weld	567,180 '	10.5 "								
Weld	567,210 '	1.3 "								
Weld	567,252 '	6.9 "								
Feature	567,259 '	7.0 "								Begin Casing
Feature	567,410 '	7.0 "								End Casing
Weld	567,421 '	5.7 "								
Weld	567,457 '	8.0 "								
Weld	567,514 '	3.5 "								
Marker	573,157 '	0.0 "								LC A-53 25141+42
Marker	578,391 '	0.0 "								Magnet 40 25193+81
Marker	582,065 '	0.0 "								LC A-54 25230+29
Marker	586,270 '	0.0 "								Valve
Marker	591,763 '	0.0 "								Magnet 41 25325+85
Marker	594,883 '	0.0 "								LC A-55 25366+15
Marker	601,893 '	0.0 "								LC A-56 25428+18
Weld	606,849 '	4.5 "								
Weld	606,892 '	4.1 "								
Weld	606,920 '	5.4 "								

PR Flaw List

Dixie Pipeline Co.

Hattiesburg - Demopolis

Event	Wheel Count		Distance from Weld		Depth	Defect Length		PR Ratio	Calc. Pres.	Comments
Feature	606,942 '	0.0 "								
Feature	607,022 '	8.0 "								Begin Casing
Weld	607,036 '	9.0 "								End Casing
Weld	607,072 '	9.9 "								
Weld	607,117 '	6.0 "								
Weld	611,496 '	0.2 "								
Weld	611,537 '	9.0 "								
Weld	611,566 '	7.4 "								
Feature	611,614 '	3.0 "								
Feature	611,717 '	0.0 "								Begin Casing
Weld	611,720 '	9.0 "								End Casing
Weld	611,751 '	2.6 "								
Weld	611,794 '	8.8 "								
Marker	615,709 '	0.0 "								
Weld	619,345 '	1.8 "								Magnet 42 25564+41
Weld	619,395 '	5.6 "								
Weld	619,455 '	10.9 "								
Feature	619,481 '	8.0 "								
Feature	619,607 '	5.0 "								Begin Casing
Weld	619,612 '	10.5 "								End Casing
Weld	619,622 '	10.5 "								
D- 31	619,625 '	1.2 "	2 '	2.7 "	39	0 '	0.3 "	0.00	0	
Weld	619,660 '	4.7 "								
Weld	619,713 '	1.7 "								
Weld	619,762 '	1.8 "								
Marker	623,281 '	0.0 "								
Weld	626,839 '	2.2 "								Magnet 43 25640+27
Weld	626,898 '	5.9 "								
Weld	626,947 '	6.8 "								
Feature	626,962 '	5.0 "								
Feature	627,244 '	0.0 "								Begin Casing
Weld	627,288 '	1.8 "								End Casing
Weld	627,346 '	4.4 "								
Weld	627,383 '	8.3 "								
Weld	627,748 '	4.1 "								
Weld	627,807 '	0.3 "								
Weld	627,865 '	11.8 "								

PR Flaw List

4769.02

Hattiesburg - Demopolis

Event	Wheel Count		Distance from Weld		Depth	Defect Length		PR Ratio	Calc. Pres.	Comments
D- 32	627,891 '	9.6 "	25 '	9.8 "	25	0 '	1.5 "	0.00	0	
Weld	627,924 '	8.8 "								
Weld	627,978 '	11.1 "								
Weld	628,029 '	3.5 "								
Marker	633,046 '	0.0 "								
Marker	635,012 '	0.0 "								Magnet 44 25732+67 Trap Demopolis

TUBOSCOPE Linalog Plus Defect Report

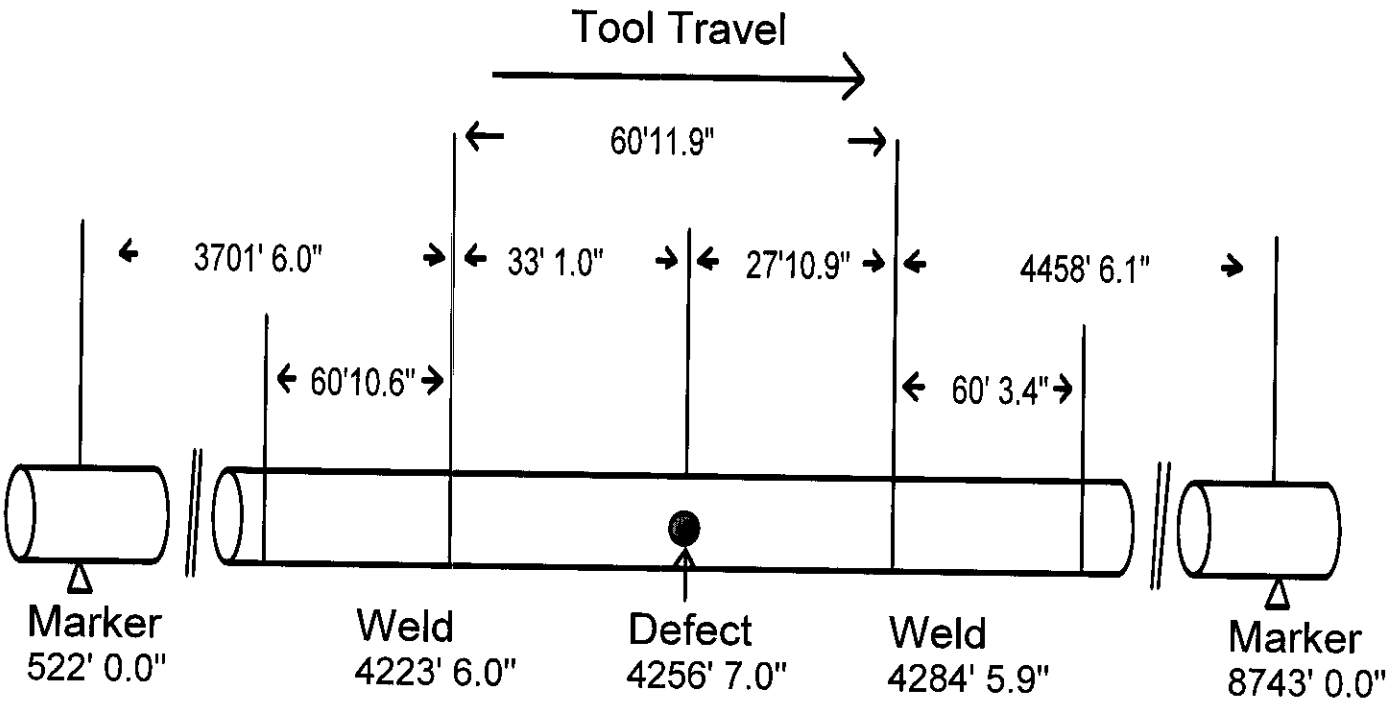

Survey Company:
Dixie Pipeline Co.

Job No.:4769.02

Survey Section:
Hattiesburg - Demopolis

Run Date:05/20/98

Upstream Marker:
Valve

Downstream Marker:
LC A-1 19479+77

Defect #1

****

Defect Wheel Count: 4256' 7.0"

Length: 0' 0.4"

Depth: 20%

Orientation: 11 O'Clk

PR Ratio:

Comments:

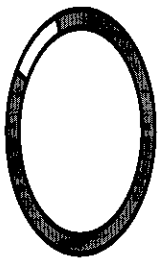

TUBOSCOPE Linalog Plus Defect Report

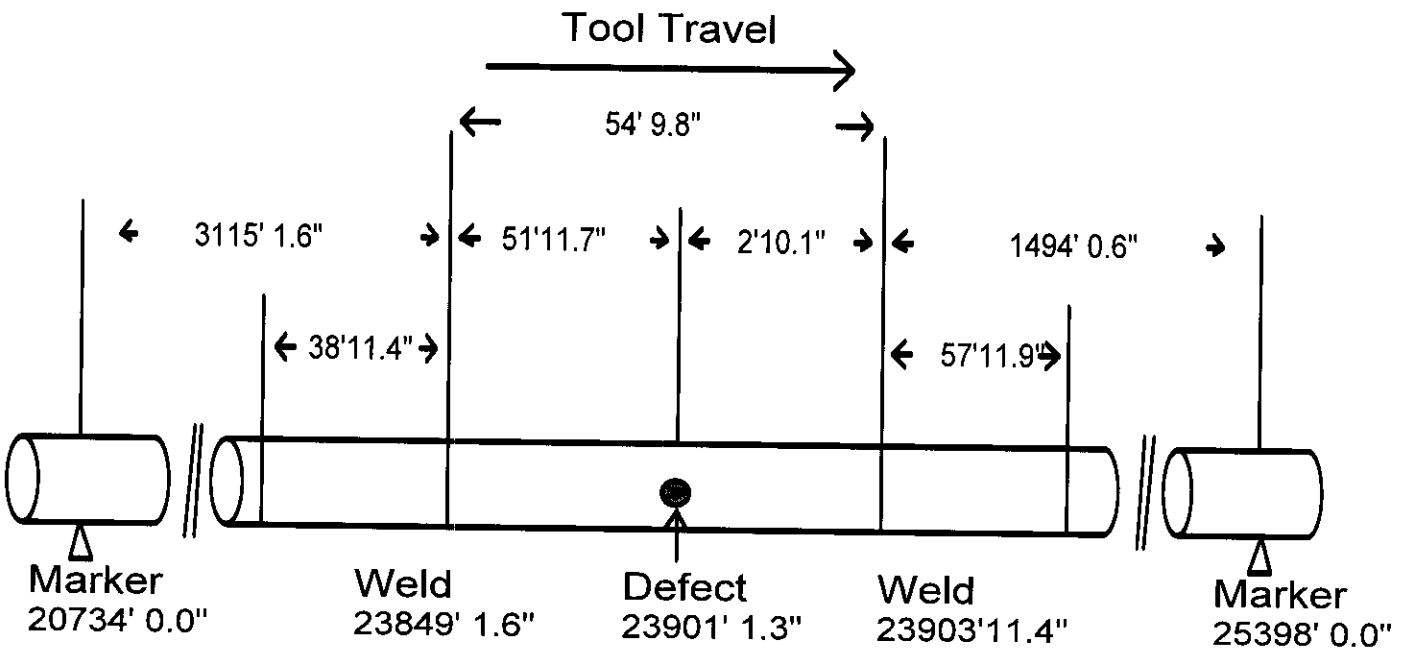

Survey Company:
Dixie Pipeline Co.

Job No.:4769.02

Survey Section:
Hattiesburg - Demopolis

Run Date:05/20/98

Upstream Marker:
LC A-4 19600+13

Downstream Marker:
LC A-5 19653+39

Defect #2

****

Defect Wheel Count: 23901' 1.3"
Length: 0' 0.4"
Depth: 27%
Orientation: 9 O'Clk
PR Ratio:
Comments:

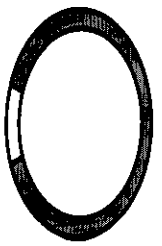

TUBOSCOPE Linalog Plus Defect Report

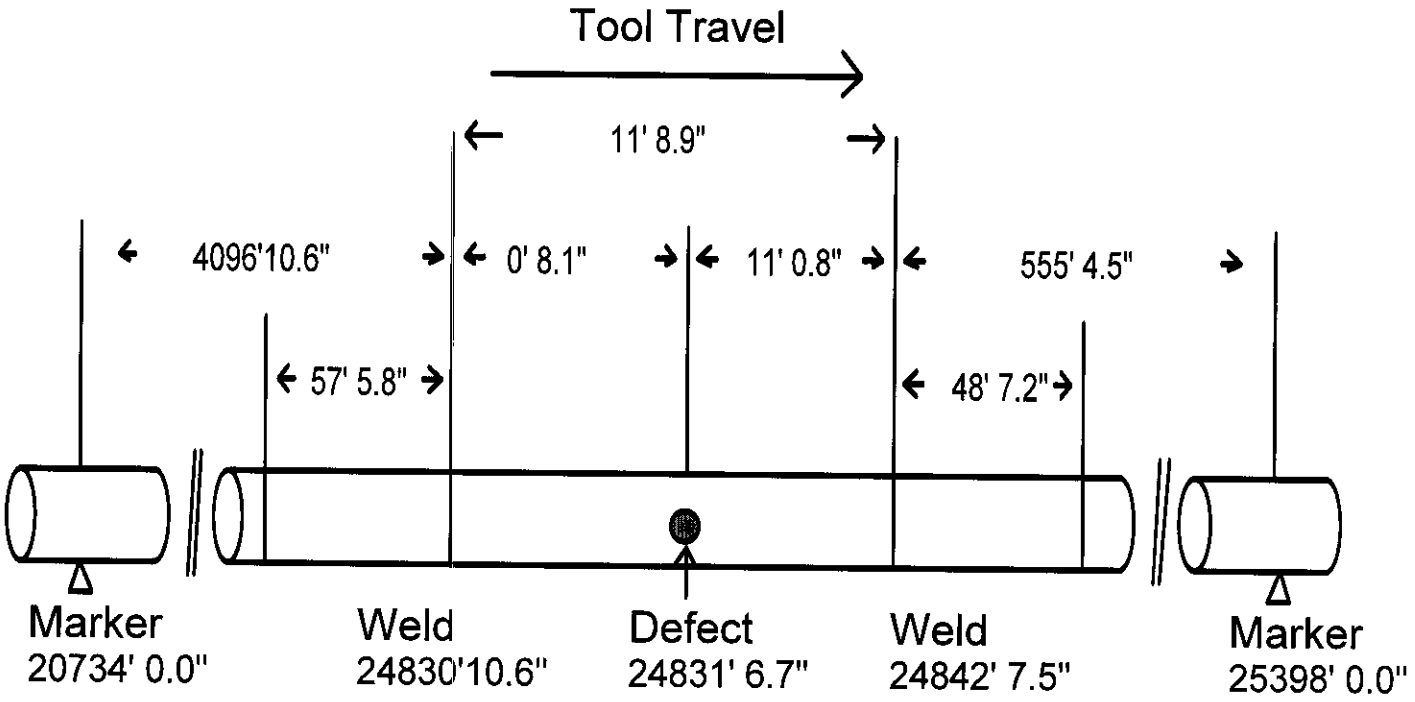

Survey Company:
Dixie Pipeline Co.

Job No.:4769.02

Survey Section:
Hattiesburg - Demopolis

Run Date:05/20/98

Upstream Marker:
LC A-4 19600+13

Downstream Marker:

Defect #3

****

Defect Wheel Count: 24831' 6.7"

Length: 0' 2.2"

Depth: 23%

Orientation: 12 O'Clk

PR Ratio:

Comments:

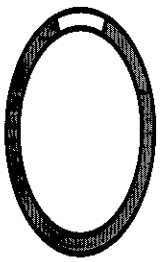

TUBOSCOPE Linalog Plus Defect Report

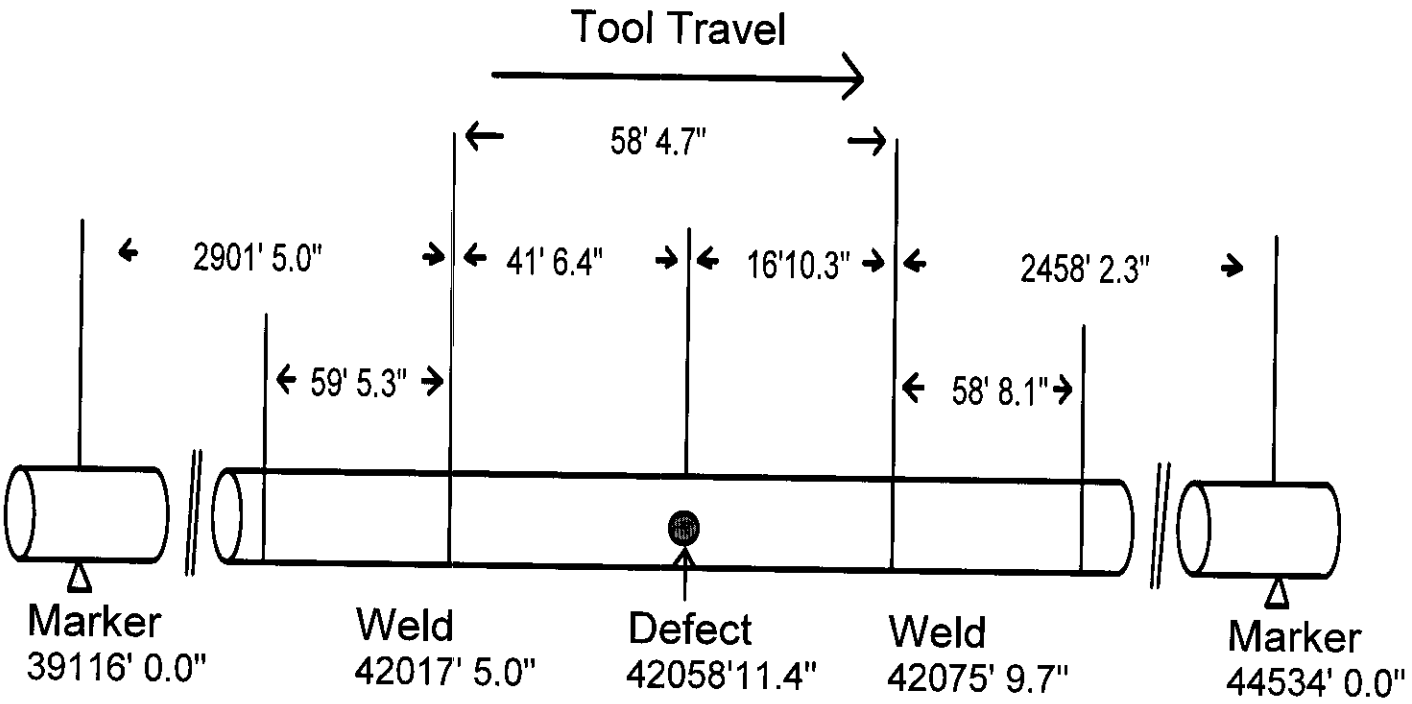

Survey Company:
Dixie Pipeline Co.

Job No.:4769.02

Survey Section:
Hattiesburg - Demopolis

Run Date:05/20/98

Upstream Marker:
LC A-8 19784+89

Downstream Marker:

Defect #4

****

Defect Wheel Count: 42058'11.4"

Length: 0' 0.5"

Depth: 25%

Orientation: 1 O'Clk

PR Ratio:

Comments:

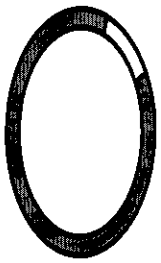

TUBOSCOPE Linalog Plus Defect Report

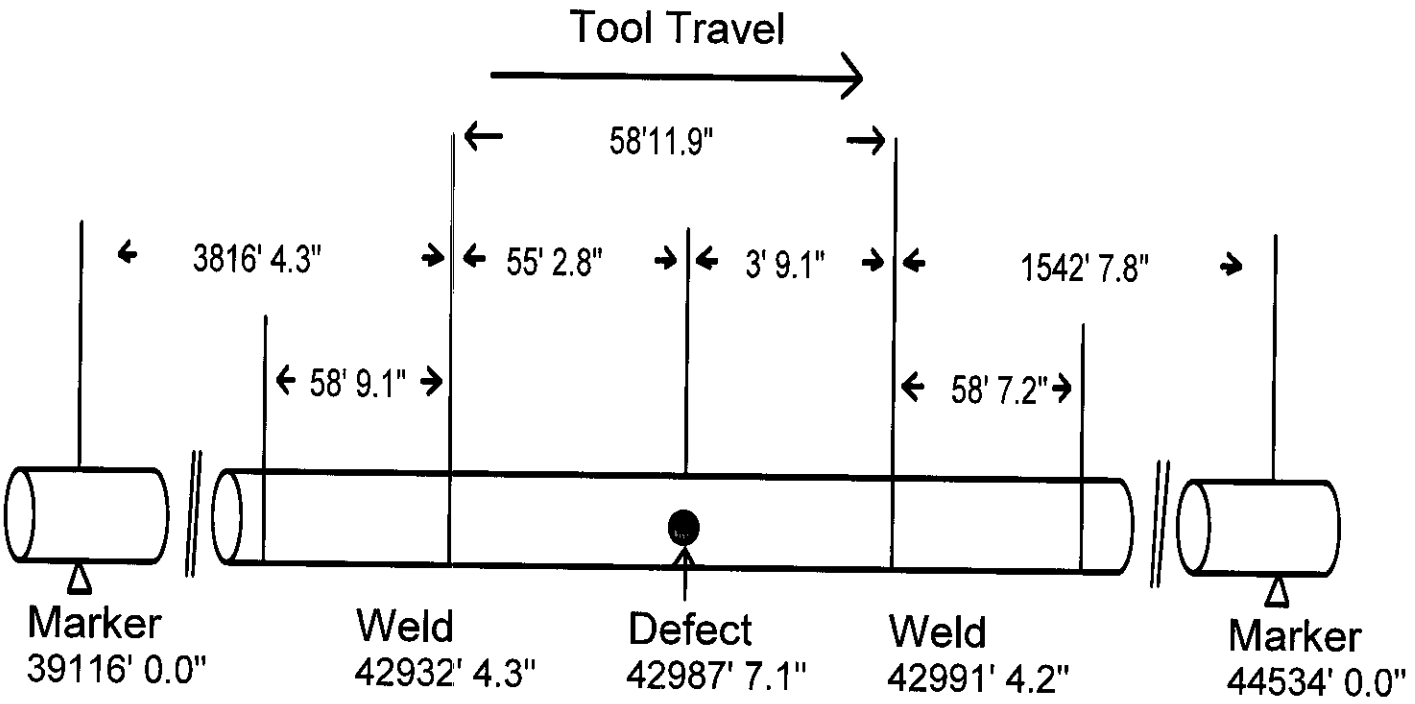

Survey Company:
Dixie Pipeline Co.

Job No.:4769.02

Survey Section:
Hattiesburg - Demopolis

Run Date:05/20/98

Upstream Marker:
LC A-8 19784+89

Downstream Marker:

Defect #5

****

Defect Wheel Count: 42987' 7.1"

Length: 0' 3.3"

Depth: 27%

Orientation: 4 O'Clk

PR Ratio:

Comments:

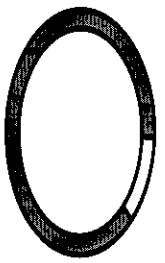

TUBOSCOPE Linalog Plus Defect Report

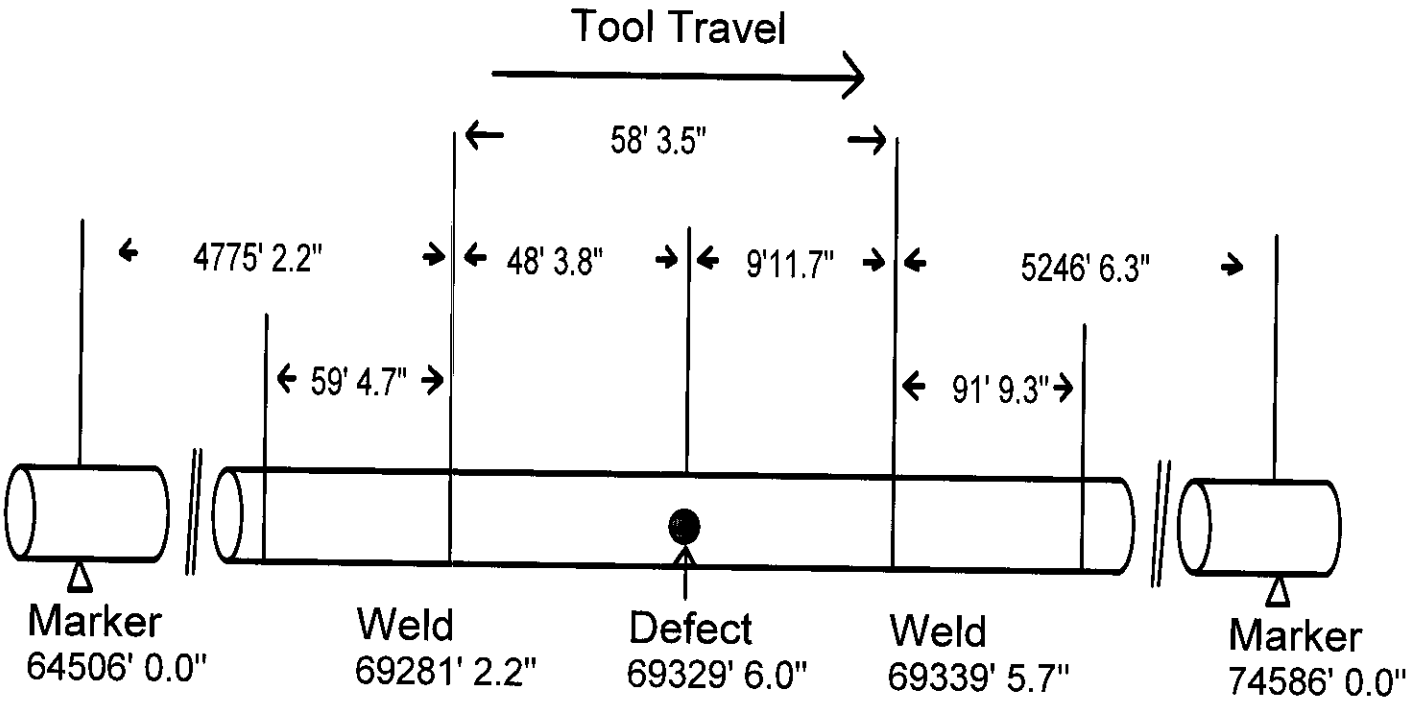

Survey Company:
Dixie Pipeline Co.

Job No.:4769.02

Survey Section:
Hattiesburg - Demopolis

Run Date:05/20/98

Upstream Marker:
LC A-11 20039+85

Downstream Marker:

Defect #6

****

Defect Wheel Count: 69329' 6.0"

Length: 0' 0.3"

Depth: 51%

Orientation: 2 O'Clk

PR Ratio:

Comments:

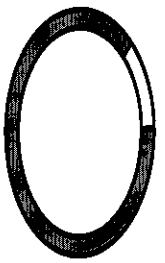

TUBOSCOPE Linalog Plus Defect Report

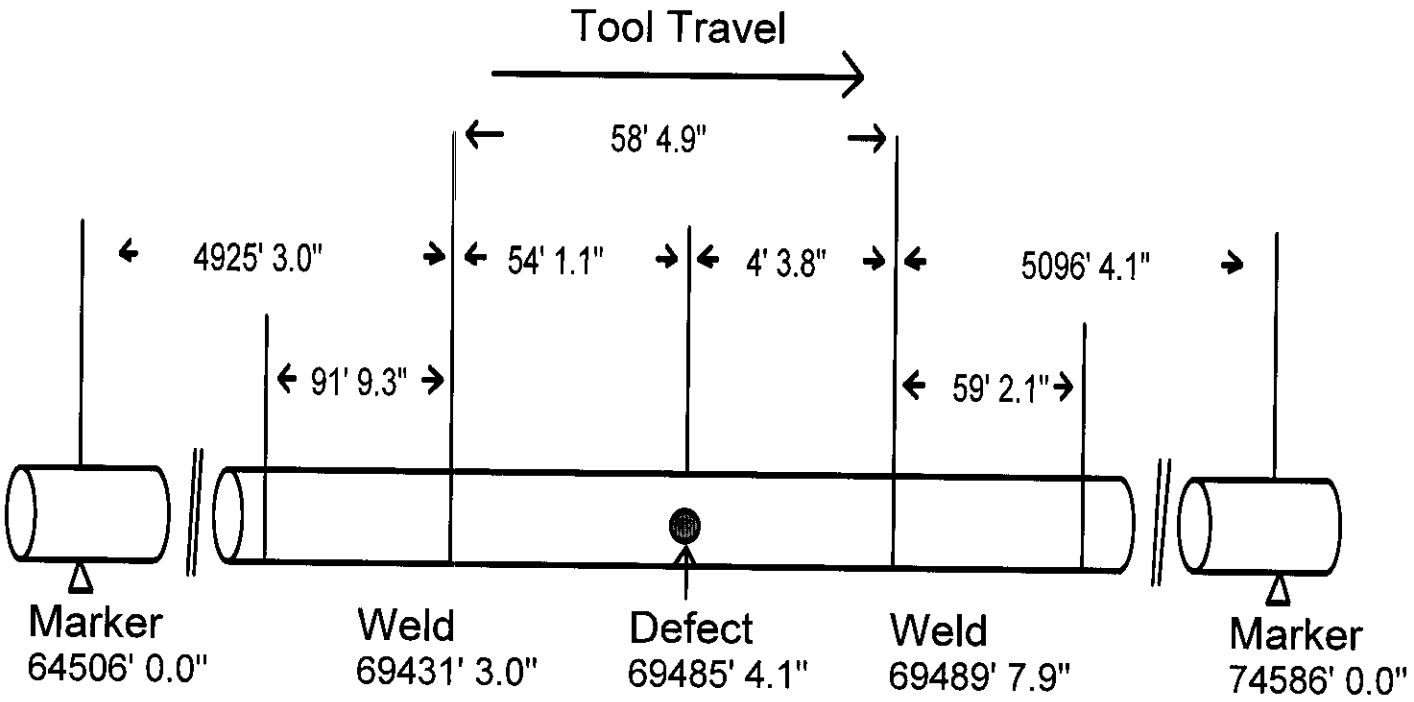

Survey Company:
Dixie Pipeline Co.

Job No.:4769.02

Survey Section:
Hattiesburg - Demopolis

Run Date:05/20/98

Upstream Marker:
LC A-11 20039+85

Downstream Marker:

Defect #7

****

Defect Wheel Count: 69485' 4.1"

Length: 0' 1.1"

Depth: 21%

Orientation: 7 O'Clk

PR Ratio:

Comments:

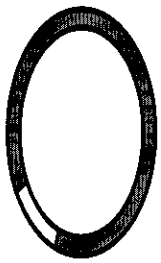

TUBOSCOPE Linalog Plus Defect Report

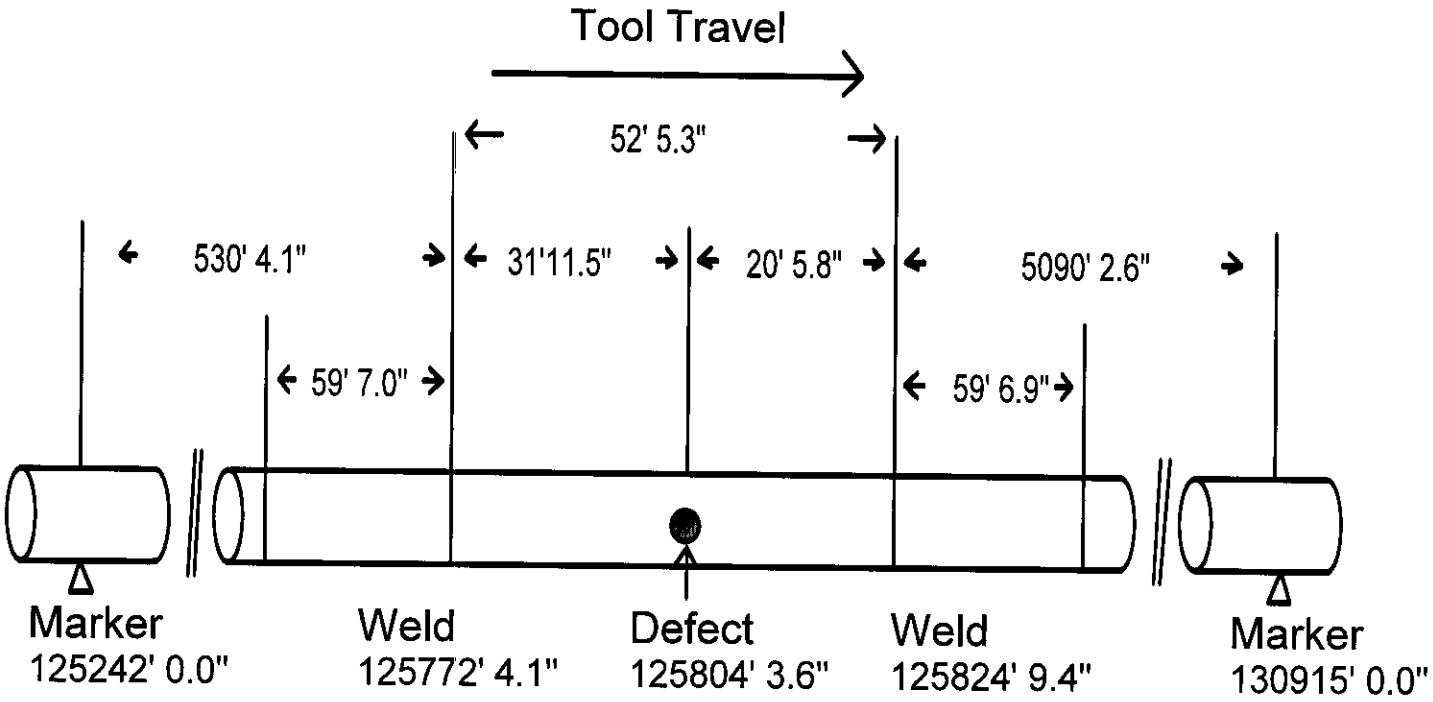

Survey Company:
Dixie Pipeline Co.

Job No.:4769.02

Survey Section:
Hattiesburg - Demopolis

Run Date:05/20/98

Upstream Marker:
Magnet 6 20649+27

Downstream Marker:

Defect #8

****

Defect Wheel Count: 125804' 3.6"

Length: 0' 0.6"

Depth: 27%

Orientation: 9 O'Clk

PR Ratio:

Comments:

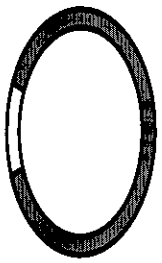

TUBOSCOPE Linalog Plus Defect Report

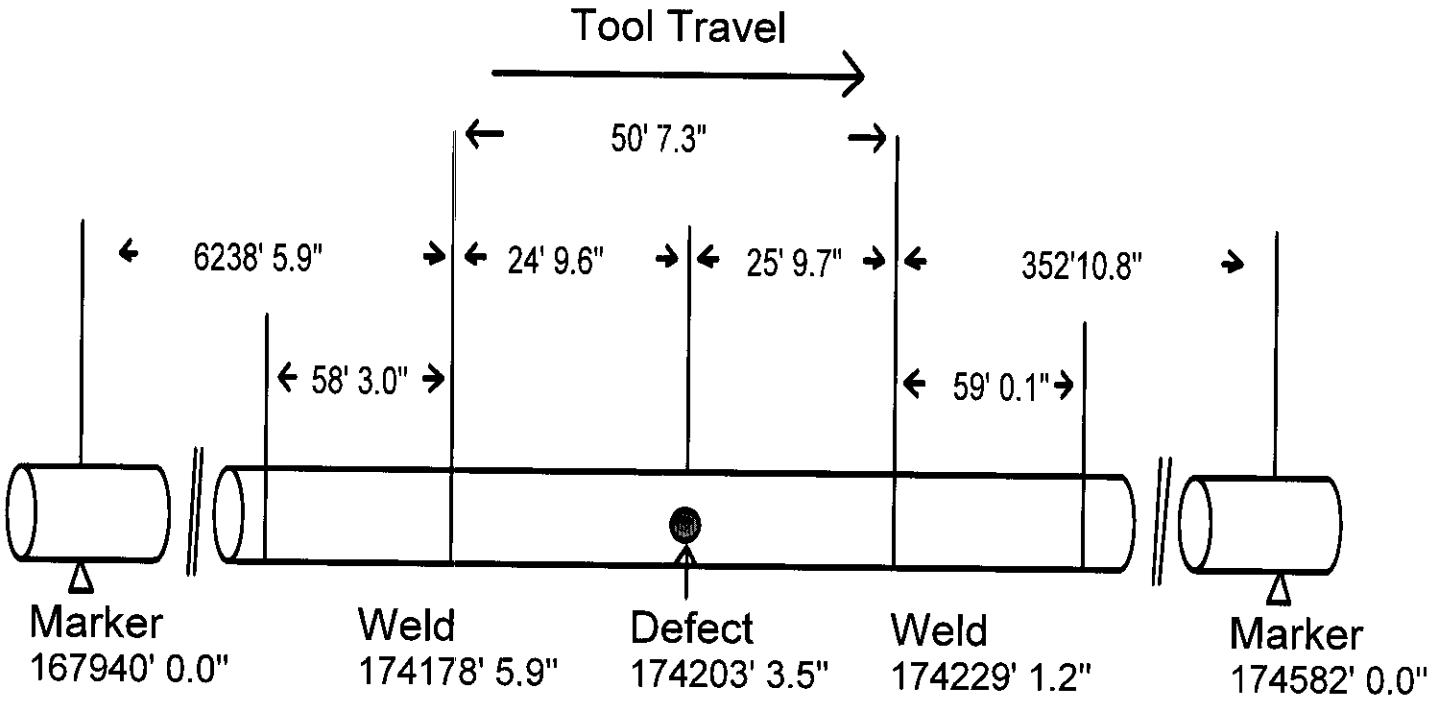

Survey Company:
Dixie Pipeline Co.

Job No.:4769.02

Survey Section:
Hattiesburg - Demopolis

Run Date:05/20/98

Upstream Marker:
LC A-20 21076+82

Downstream Marker:

Defect #9

****

Defect Wheel Count: 174203' 3.5"

Length: 0' 1.9"

Depth: 41%

Orientation: 10 O'Clk

PR Ratio:

Comments:

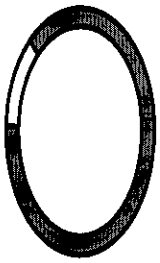

TUBOSCOPE Linalog Plus Defect Report

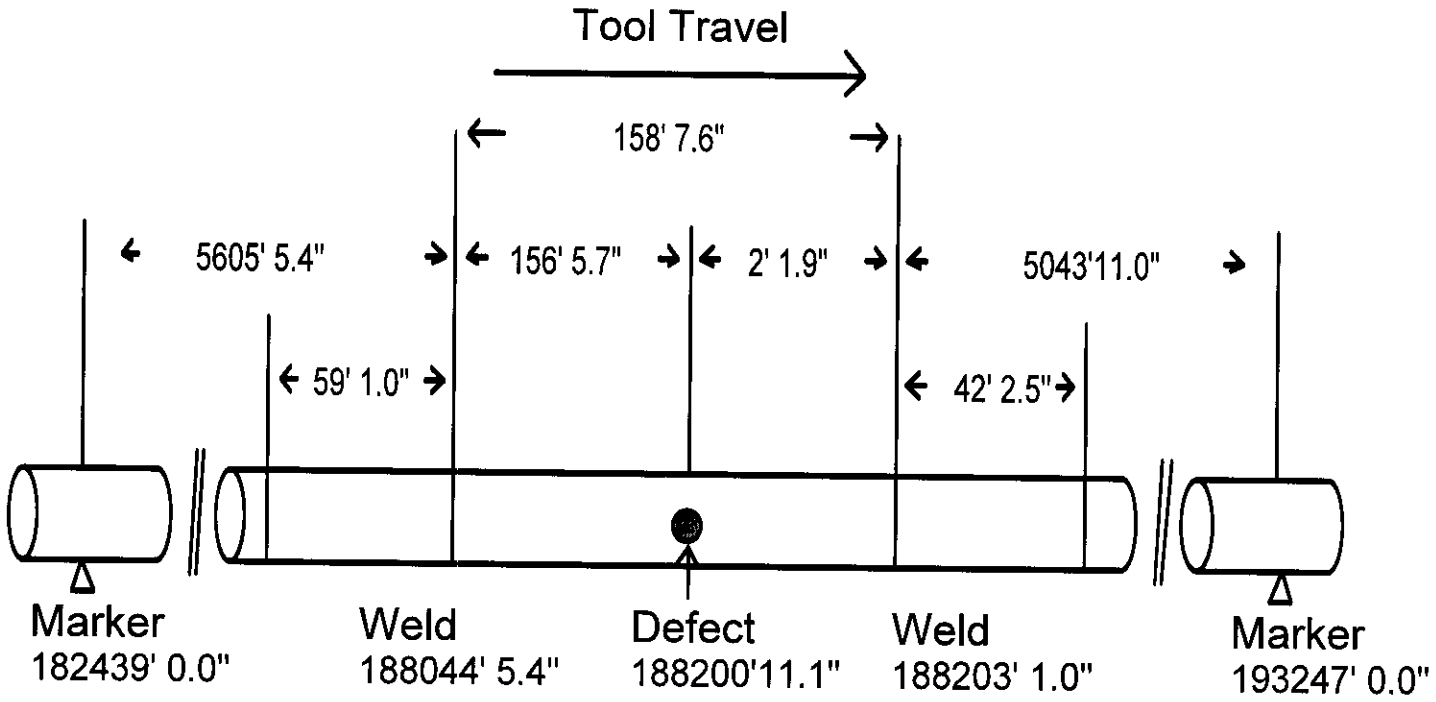

Survey Company:
Dixie Pipeline Co.

Job No.:4769.02

Survey Section:
Hattiesburg - Demopolis

Run Date:05/20/98

Upstream Marker:
LC A-22 21222+76

Downstream Marker:

Defect #10

****

Defect Wheel Count: 188200'11.1"

Length: 0' 1.8"

Depth: 24%

Orientation: 5 O'Clk

PR Ratio:

Comments:

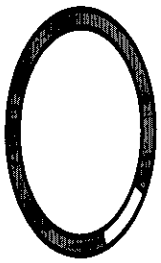

TUBOSCOPE Linalog Plus Defect Report

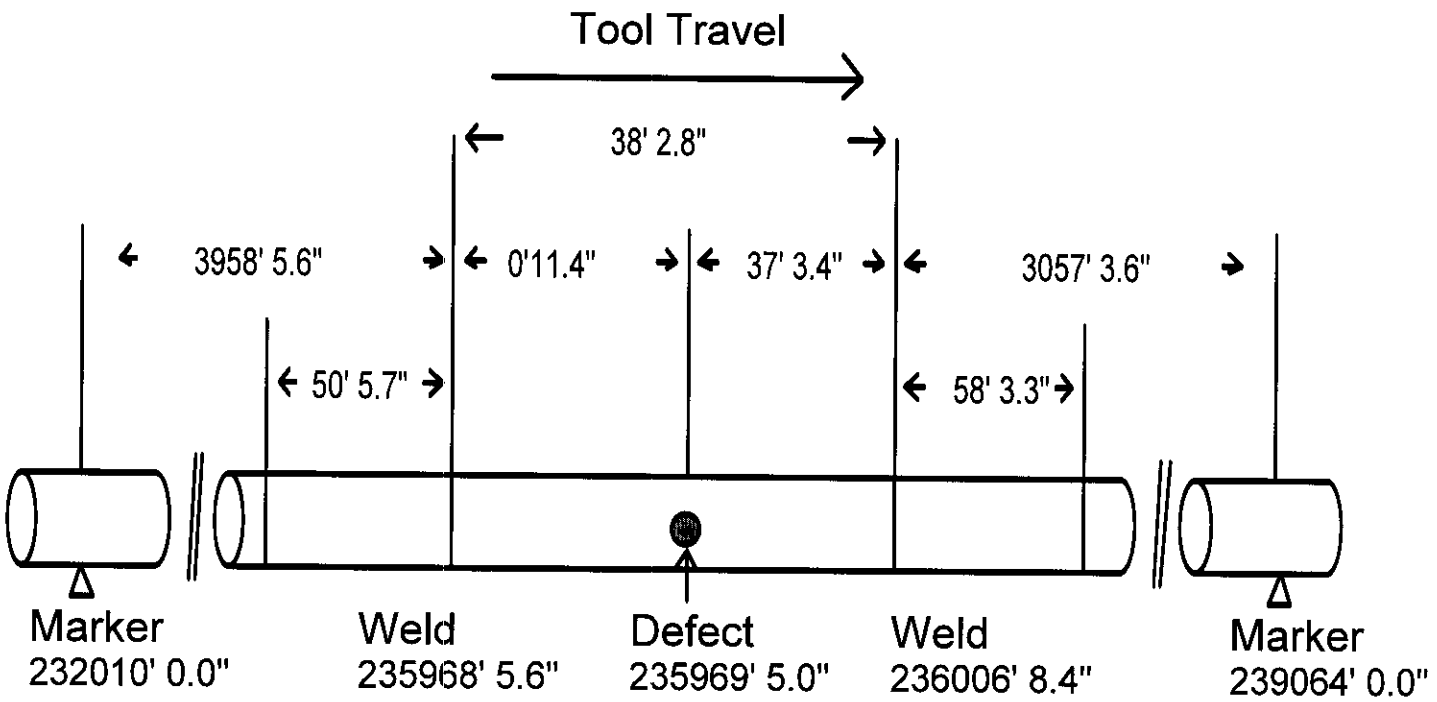

Survey Company:
Dixie Pipeline Co.

Job No.:4769.02

Survey Section:
Hattiesburg - Demopolis

Run Date:05/20/98

Upstream Marker:
Magnet 15 21720+45

Downstream Marker:

Defect #11

****

Defect Wheel Count: 235969' 5.0"

Length: 0' 0.7"

Depth: 39%

Orientation: 4 O'Clk

PR Ratio:

Comments:

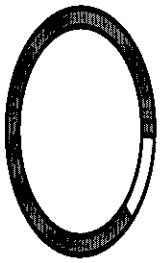

TUBOSCOPE Linalog Plus Defect Report

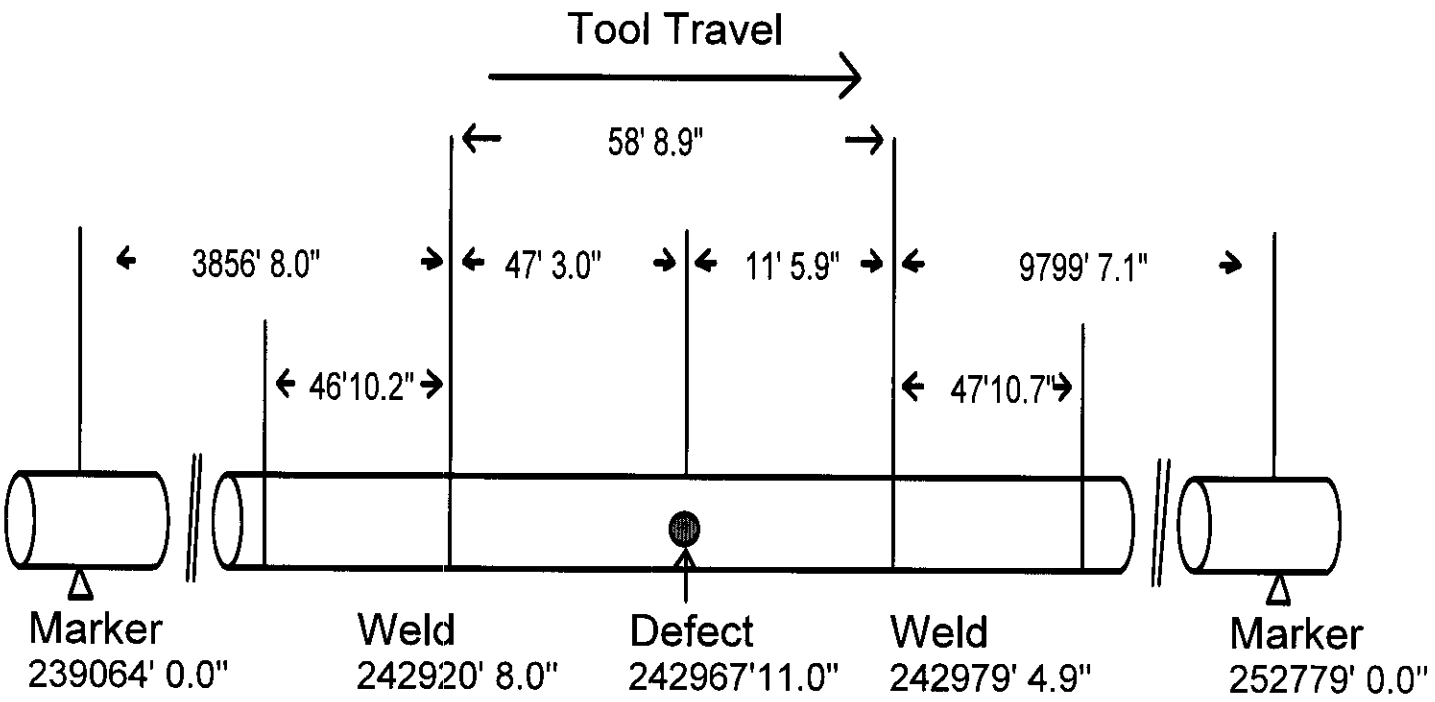

Survey Company:
Dixie Pipeline Co.

Job No.:4769.02

Survey Section:
Hattiesburg - Demopolis

Run Date:05/20/98

Upstream Marker:
Magnet 16 21776+50

Downstream Marker:

Defect #12

****

Defect Wheel Count: 242967'11.0"

Length: 0' 1.9"

Depth: 22%

Orientation: 10 O'Clk

PR Ratio:

Comments:

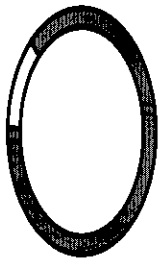

TUBOSCOPE Linalog Plus Defect Report

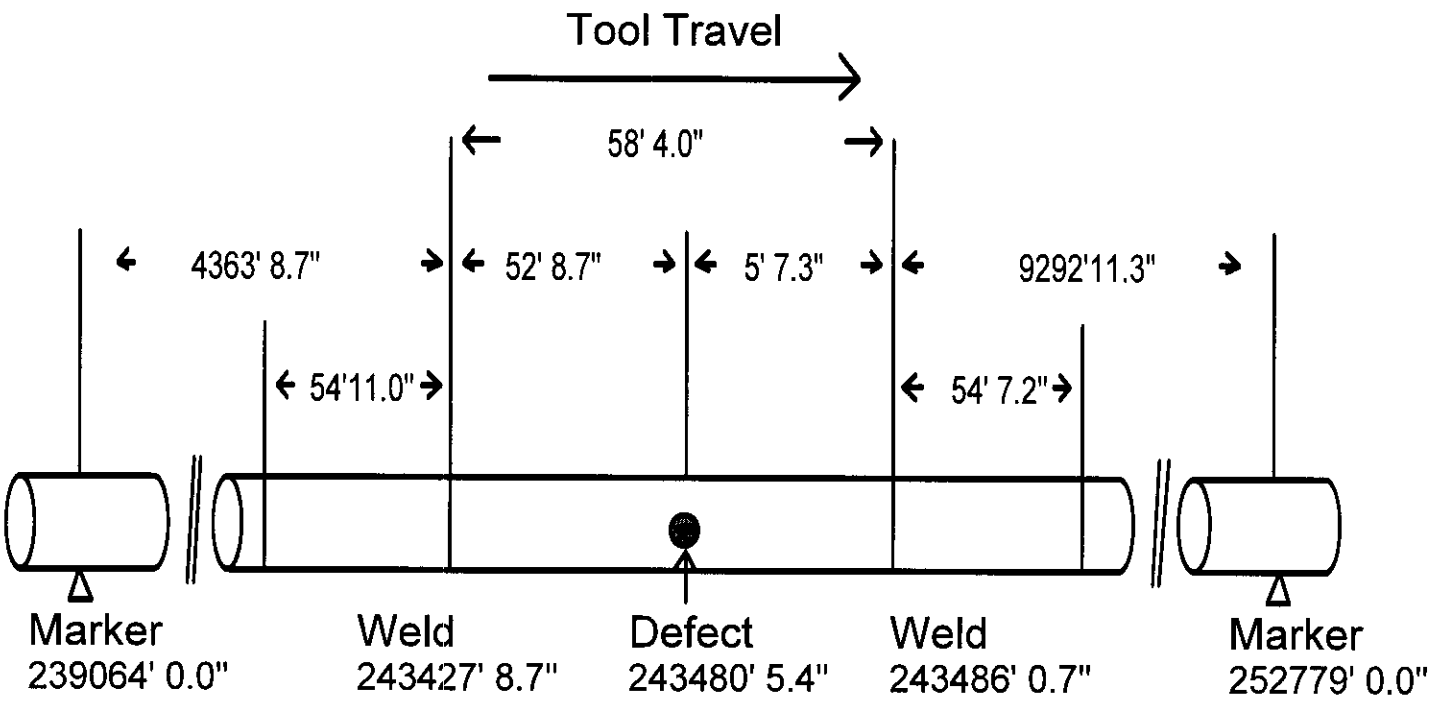

Survey Company:
Dixie Pipeline Co.

Job No.:4769.02

Survey Section:
Hattiesburg - Demopolis

Run Date:05/20/98

Upstream Marker:
Magnet 16 21776+50

Downstream Marker:

Defect #13

****

Defect Wheel Count: 243480' 5.4"

Length: 0' 1.2"

Depth: 27%

Orientation: 8 O'Clk

PR Ratio:

Comments:

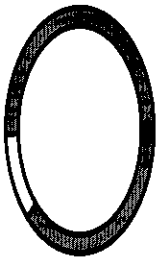

TUBOSCOPE Linalog Plus Defect Report

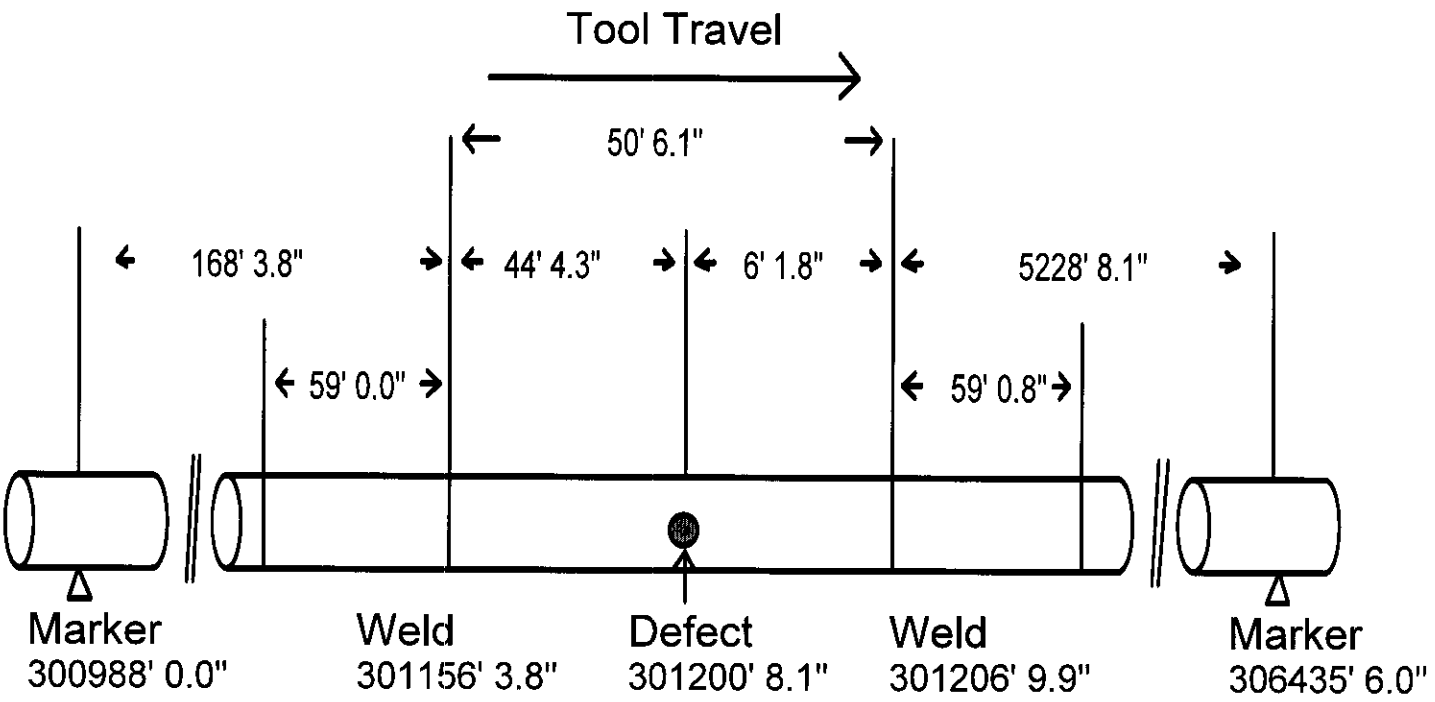

Survey Company:
Dixie Pipeline Co.

Job No.:4769.02

Survey Section:
Hattiesburg - Demopolis

Run Date:05/20/98

Upstream Marker:
LC A-30 22413+05

Downstream Marker:

Defect #14

****

Defect Wheel Count: 301200' 8.1"

Length: 0' 0.2"

Depth: 23%

Orientation: 7 O'Clk

PR Ratio:

Comments:

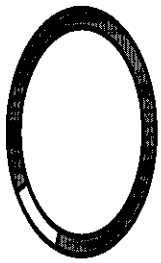

TUBOSCOPE Linalog Plus Defect Report

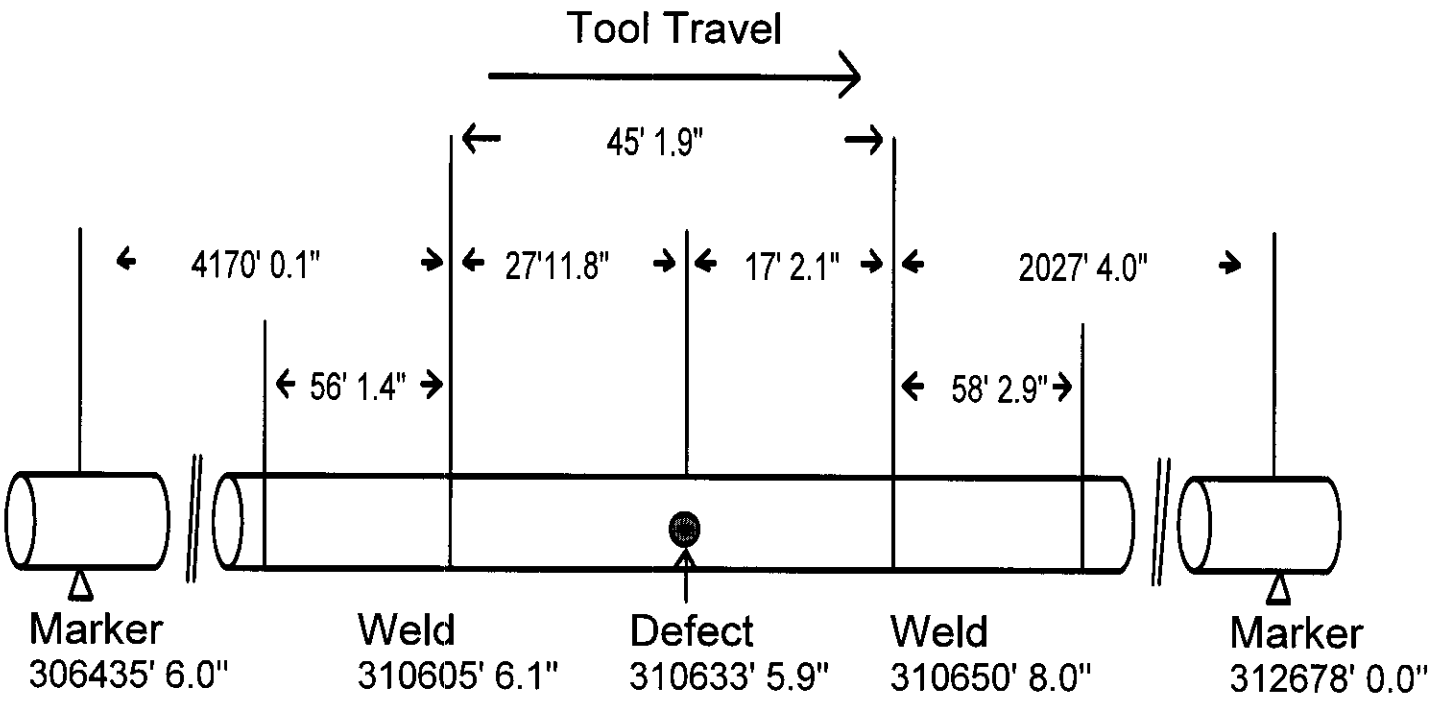

Survey Company:
Dixie Pipeline Co.

Job No.:4769.02

Survey Section:
Hattiesburg - Demopolis

Run Date:05/20/98

Upstream Marker:
Valve

Downstream Marker:

Defect #15

****

Defect Wheel Count: 310633' 5.9"

Length: 0' 0.8"

Depth: 36%

Orientation: 4 O'Clk

PR Ratio:

Comments:

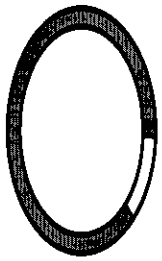

TUBOSCOPE Linalog Plus Defect Report

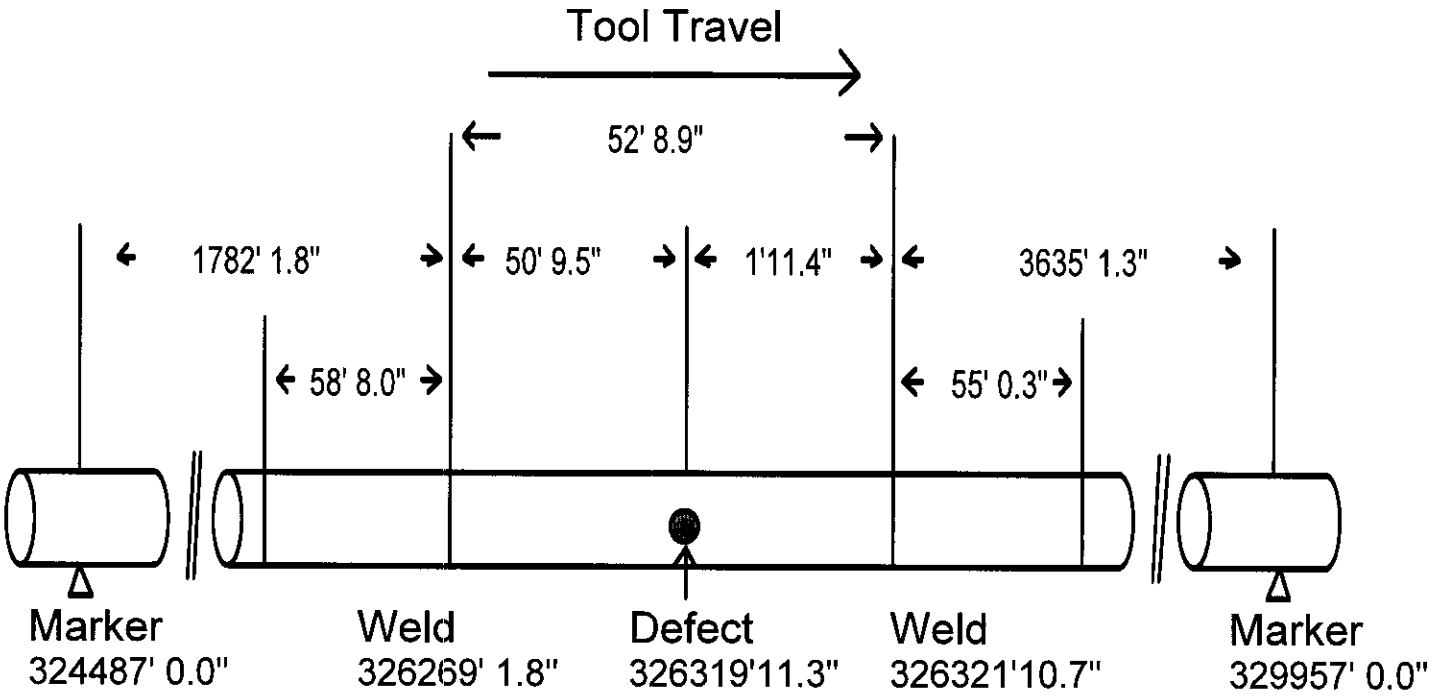

Survey Company:
Dixie Pipeline Co.

Job No.:4769.02

Survey Section:
Hattiesburg - Demopolis

Run Date:05/20/98

Upstream Marker:
LC A-33 22648+77

Downstream Marker:

Defect #16

****

Defect Wheel Count: 326319'11.3"

Length: 0' 0.4"

Depth: 34%

Orientation: 7 O'Clk

PR Ratio:

Comments:

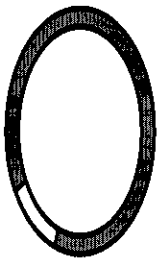

TUBOSCOPE Linalog Plus Defect Report

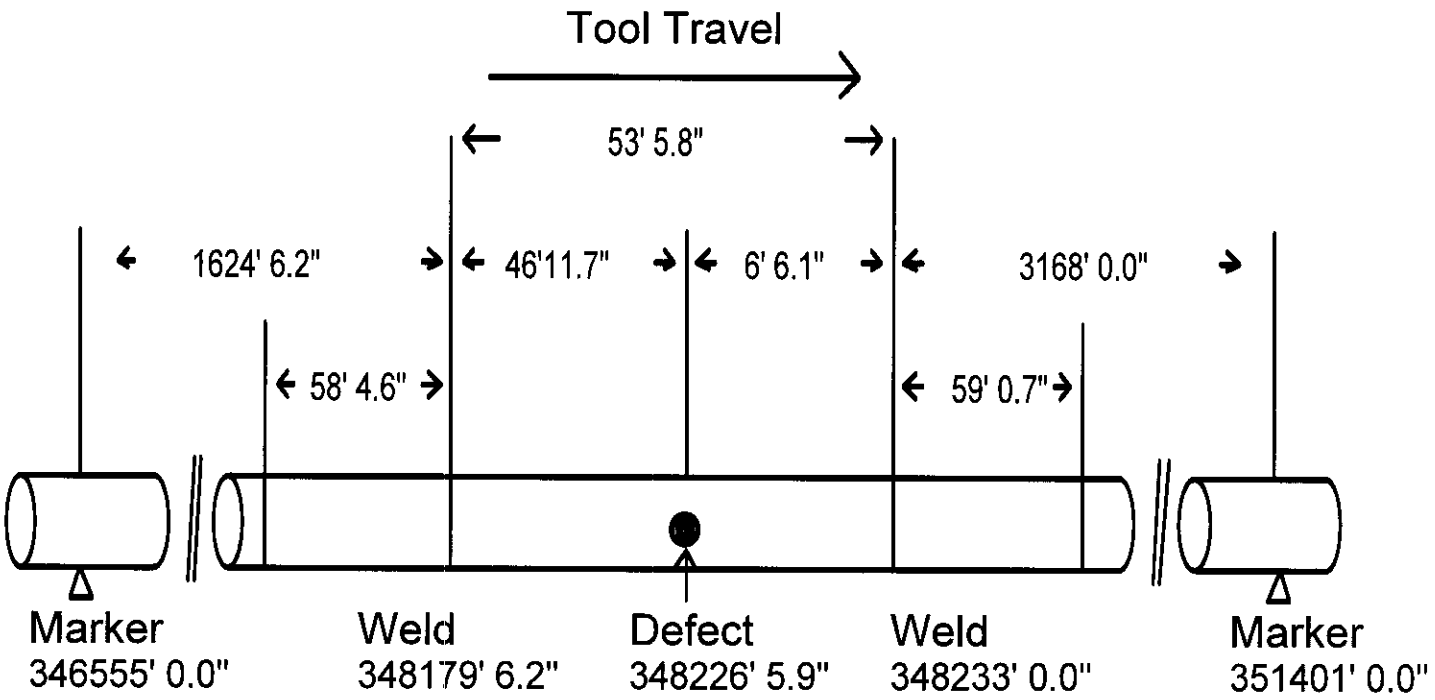

Survey Company:
Dixie Pipeline Co.

Job No.:4769.02

Survey Section:
Hattiesburg - Demopolis

Run Date:05/20/98

Upstream Marker:
LC A-36 MP 433.00 22869+52

Downstream Marker:

Defect #17

****

Defect Wheel Count: 348226' 5.9"

Length: 0' 0.4"

Depth: 21%

Orientation: 4 O'Clk

PR Ratio:

Comments:

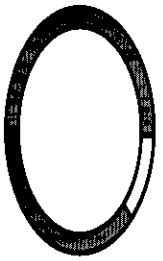

TUBOSCOPE Linalog Plus Defect Report

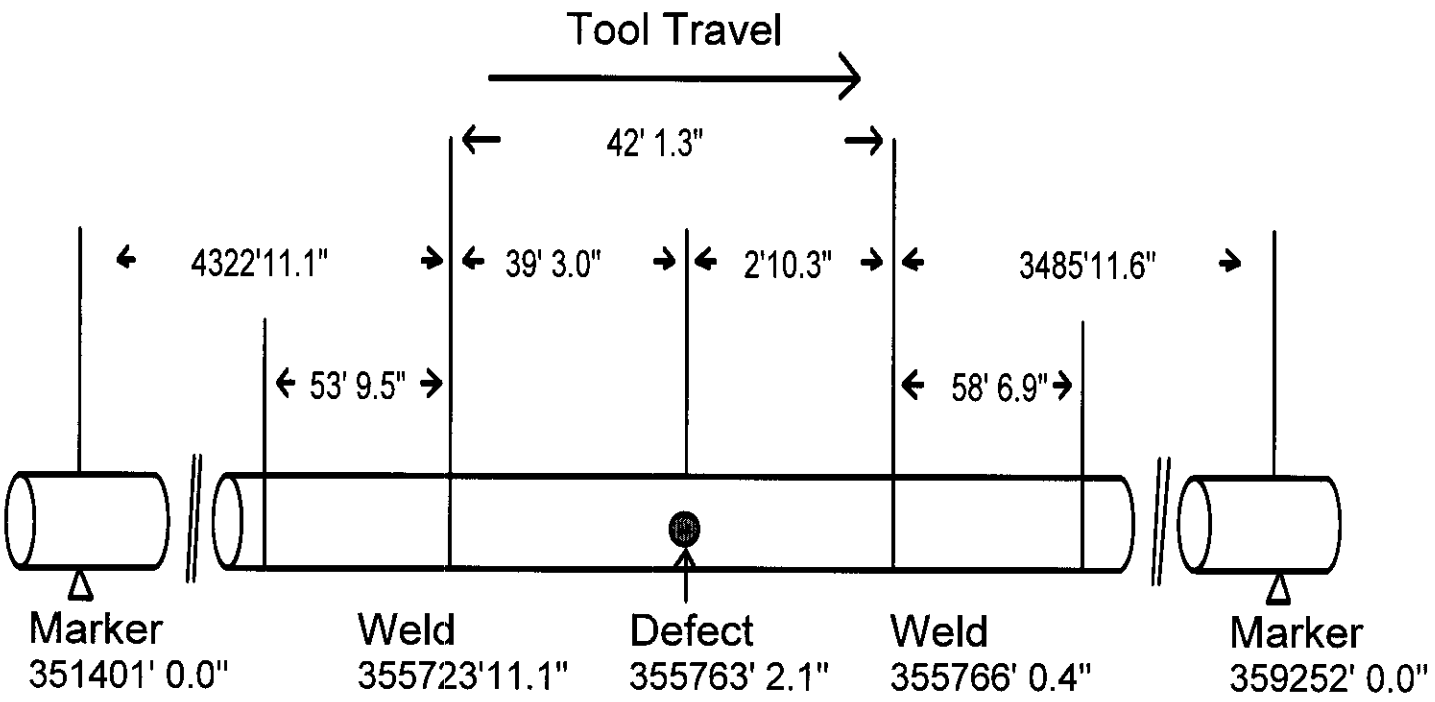

Survey Company:
Dixie Pipeline Co.

Job No.:4769.02

Survey Section:
Hattiesburg - Demopolis

Run Date:05/20/98

Upstream Marker:
LC A-37 22918+77

Downstream Marker:

Defect #18

****

Defect Wheel Count: 355763' 2.1"
Length: 0' 0.4"
Depth: 27%
Orientation: 4 O'Clk
PR Ratio:
Comments:

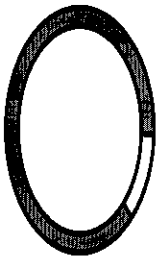

TUBOSCOPE Linalog Plus Defect Report

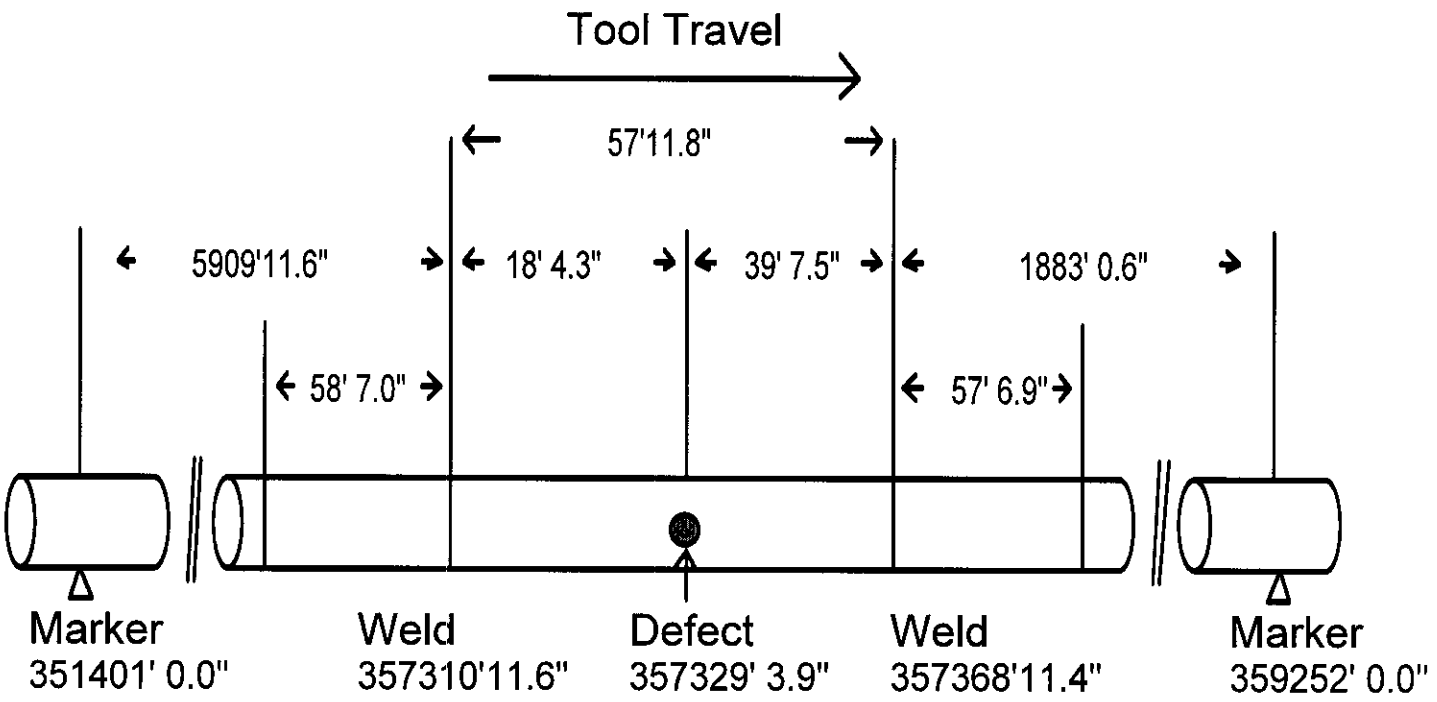

Survey Company:
Dixie Pipeline Co.

Job No.:4769.02

Survey Section:
Hattiesburg - Demopolis

Run Date:05/20/98

Upstream Marker:
LC A-37 22918+77

Downstream Marker:

Defect #19

****

Defect Wheel Count: 357329' 3.9"

Length: 0' 2.2"

Depth: 22%

Orientation: 4 O'Clk

PR Ratio:

Comments:

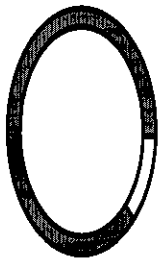

TUBOSCOPE Linalog Plus Defect Report

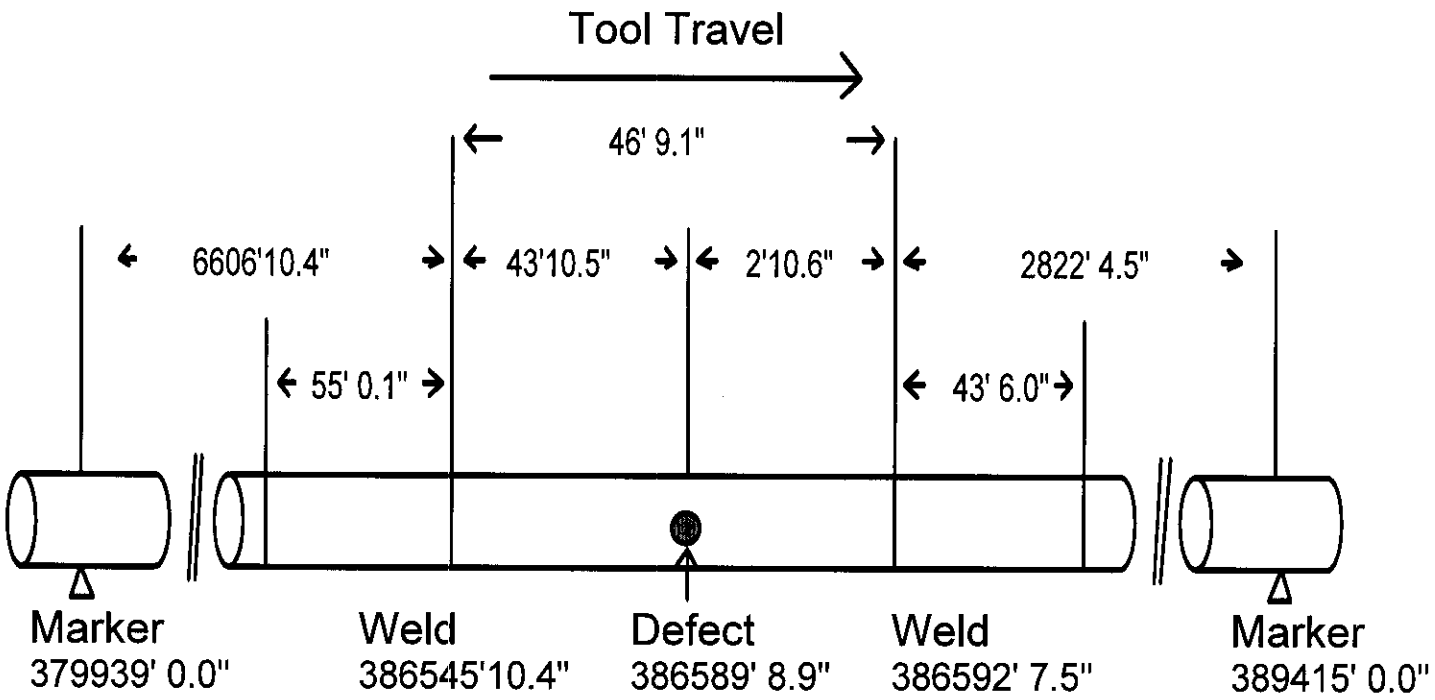

Survey Company:
Dixie Pipeline Co.

Job No.:4769.02

Survey Section:
Hattiesburg - Demopolis

Run Date:05/20/98

Upstream Marker:
LC A-41 23205+35

Downstream Marker:

Defect #20

****

Defect Wheel Count: 386589' 8.9"

Length: 0' 0.4"

Depth: 28%

Orientation: 8 O'Clk

PR Ratio:

Comments:

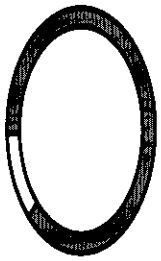

TUBOSCOPE Linalog Plus Defect Report

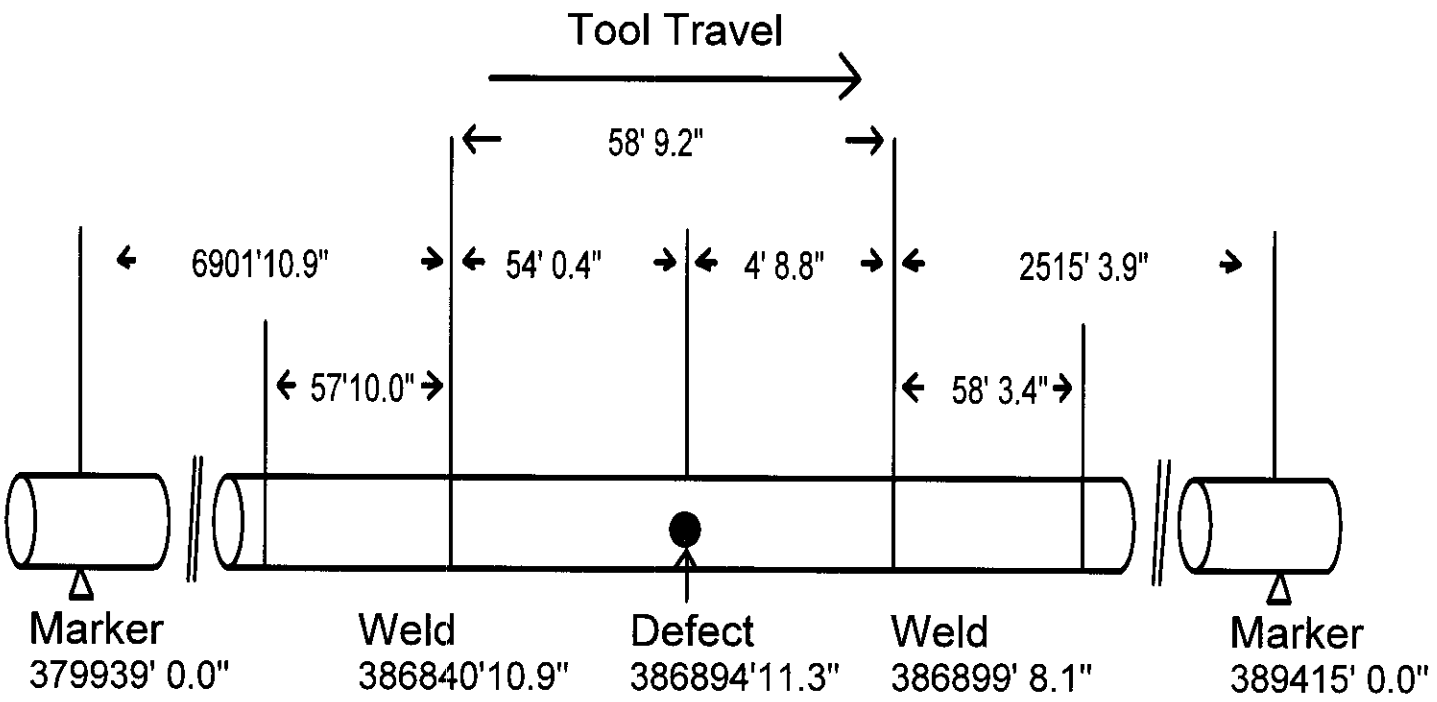

Survey Company:
Dixie Pipeline Co.

Job No.:4769.02

Survey Section:
Hattiesburg - Demopolis

Run Date:05/20/98

Upstream Marker:
LC A-41 23205+35

Downstream Marker:

Defect #21

****

Defect Wheel Count: 386894'11.3"

Length: 0' 1.1"

Depth: 27%

Orientation: 7 O'Clk

PR Ratio:

Comments:

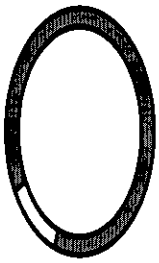

TUBOSCOPE Linalog Plus Defect Report

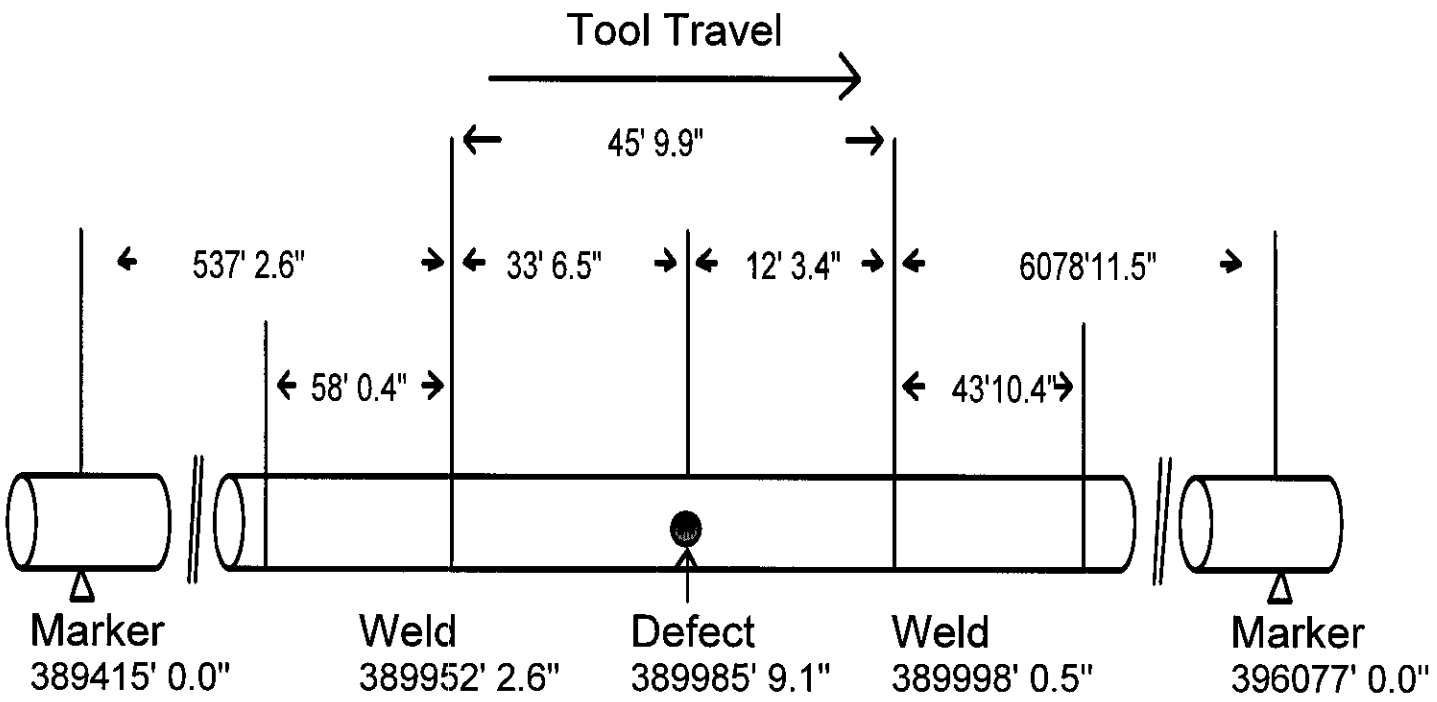

Survey Company:
Dixie Pipeline Co.

Job No.:4769.02

Survey Section:
Hattiesburg - Demopolis

Run Date:05/20/98

Upstream Marker:
LC A-42 23300+64

Downstream Marker:

Defect #22

****

Defect Wheel Count: 389985' 9.1"

Length: 0' 1.9"

Depth: 30%

Orientation: 7 O'Clk

PR Ratio:

Comments:

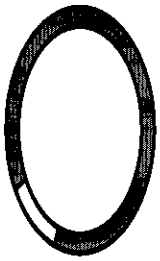

TUBOSCOPE Linalog Plus Defect Report

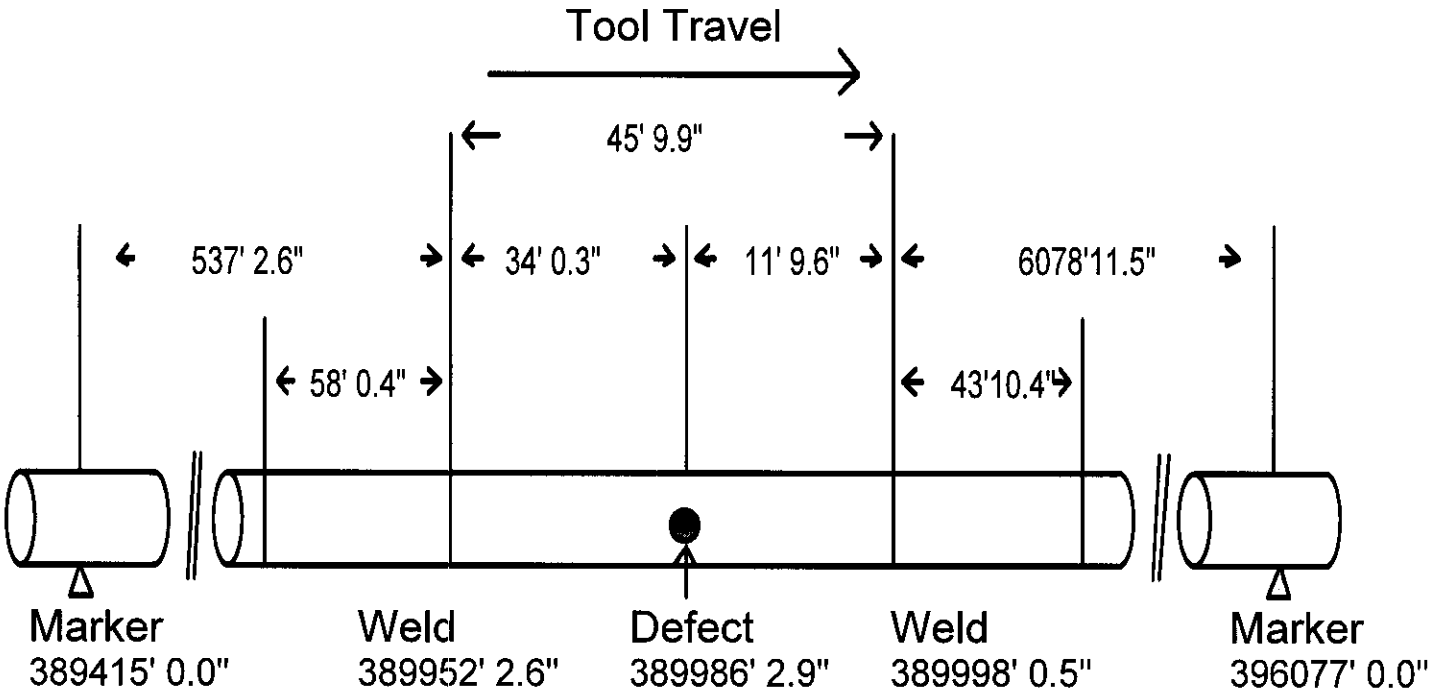

Survey Company:
Dixie Pipeline Co.

Job No.:4769.02

Survey Section:
Hattiesburg - Demopolis

Run Date:05/20/98

Upstream Marker:
LC A-42 23300+64

Downstream Marker:

Defect #23

****

Defect Wheel Count: 389986' 2.9"

Length: 0' 2.0"

Depth: 21%

Orientation: 7 O'Clk

PR Ratio:

Comments:

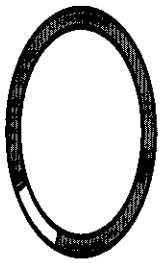

TUBOSCOPE Linalog Plus Defect Report

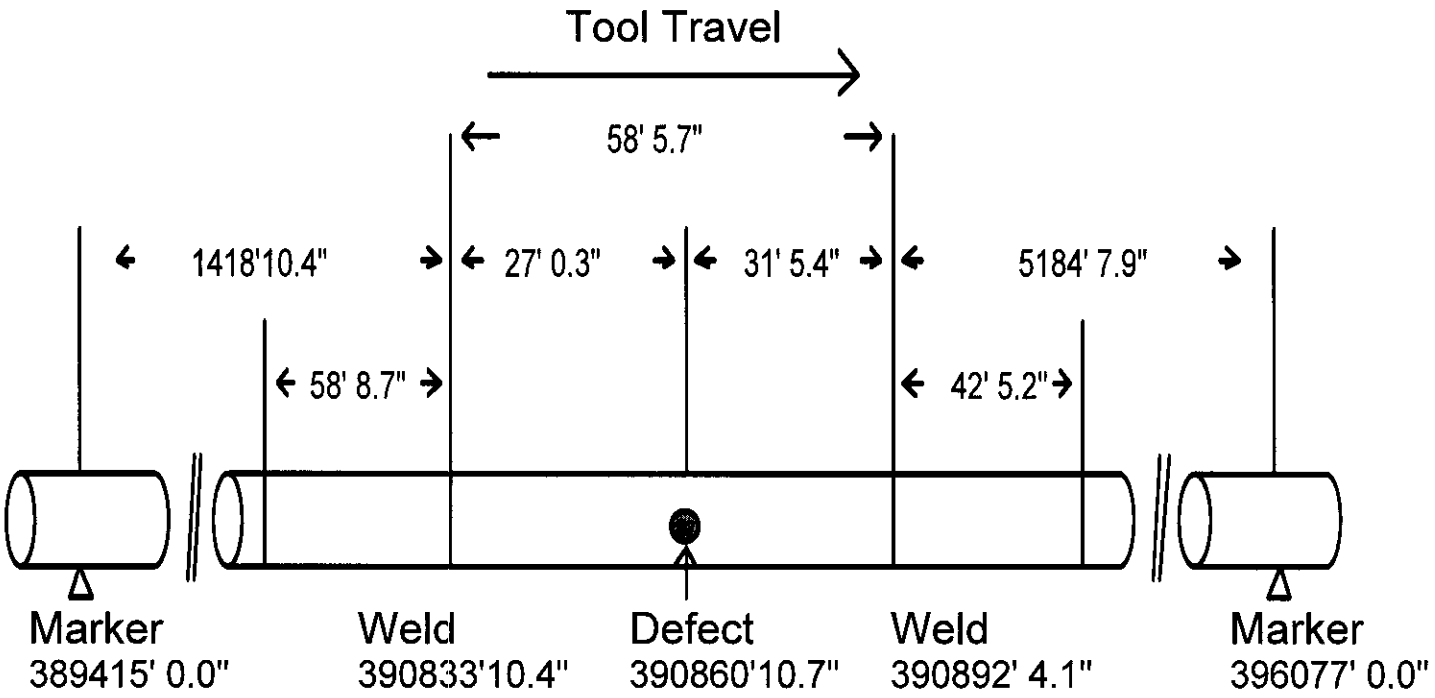

Survey Company:
Dixie Pipeline Co.

Job No.:4769.02

Survey Section:
Hattiesburg - Demopolis

Run Date:05/20/98

Upstream Marker:
LC A-42 23300+64

Downstream Marker:

Defect #24

****

Defect Wheel Count: 390860'10.7"

Length: 0' 3.8"

Depth: 36%

Orientation: 8 O'Clk

PR Ratio:

Comments:

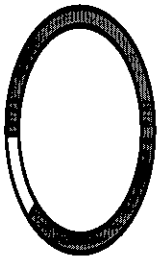

TUBOSCOPE Linalog Plus Defect Report

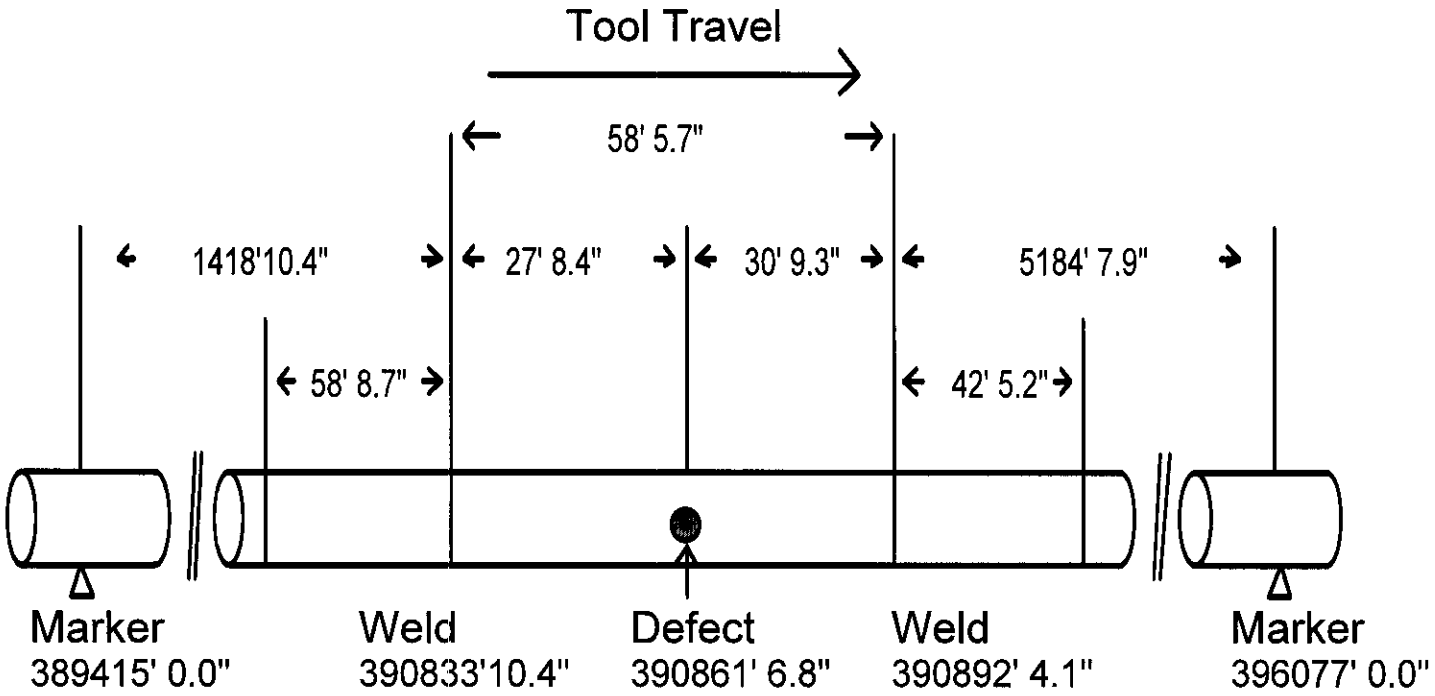

Survey Company:
Dixie Pipeline Co.

Job No.:4769.02

Survey Section:
Hattiesburg - Demopolis

Run Date:05/20/98

Upstream Marker:
LC A-42 23300+64

Downstream Marker:

Defect #25

****

Defect Wheel Count: 390861' 6.8"

Length: 0' 0.4"

Depth: 23%

Orientation: 8 O'Clk

PR Ratio:

Comments:

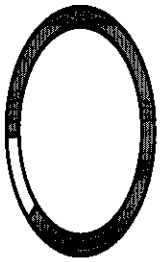

TUBOSCOPE Linalog Plus Defect Report

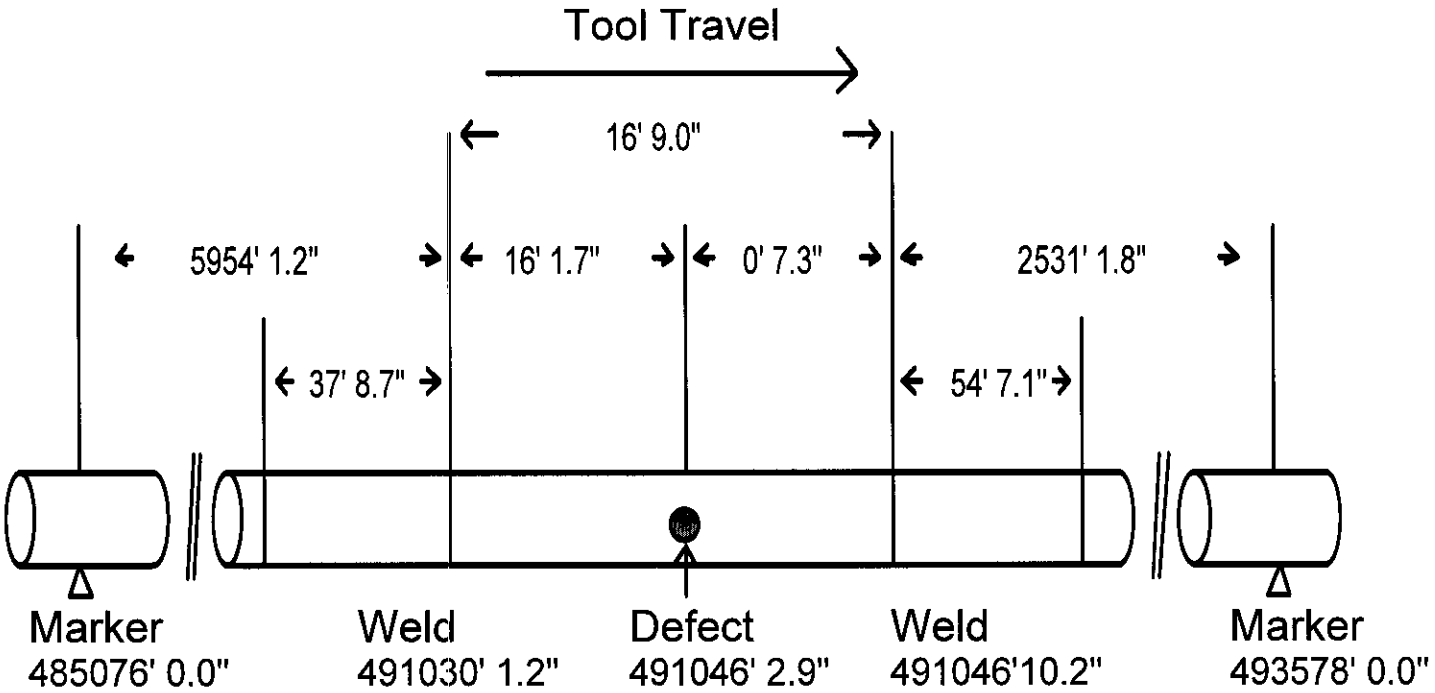

Survey Company:
Dixie Pipeline Co.

Job No.:4769.02

Survey Section:
Hattiesburg - Demopolis

Run Date:05/20/98

Upstream Marker:
Magnet 31 24260+36

Downstream Marker:

Defect #26

****

Defect Wheel Count: 491046' 2.9"

Length: 0' 0.6"

Depth: 28%

Orientation: 1 O'Clk

PR Ratio:

Comments:

TUBOSCOPE Linalog Plus Defect Report

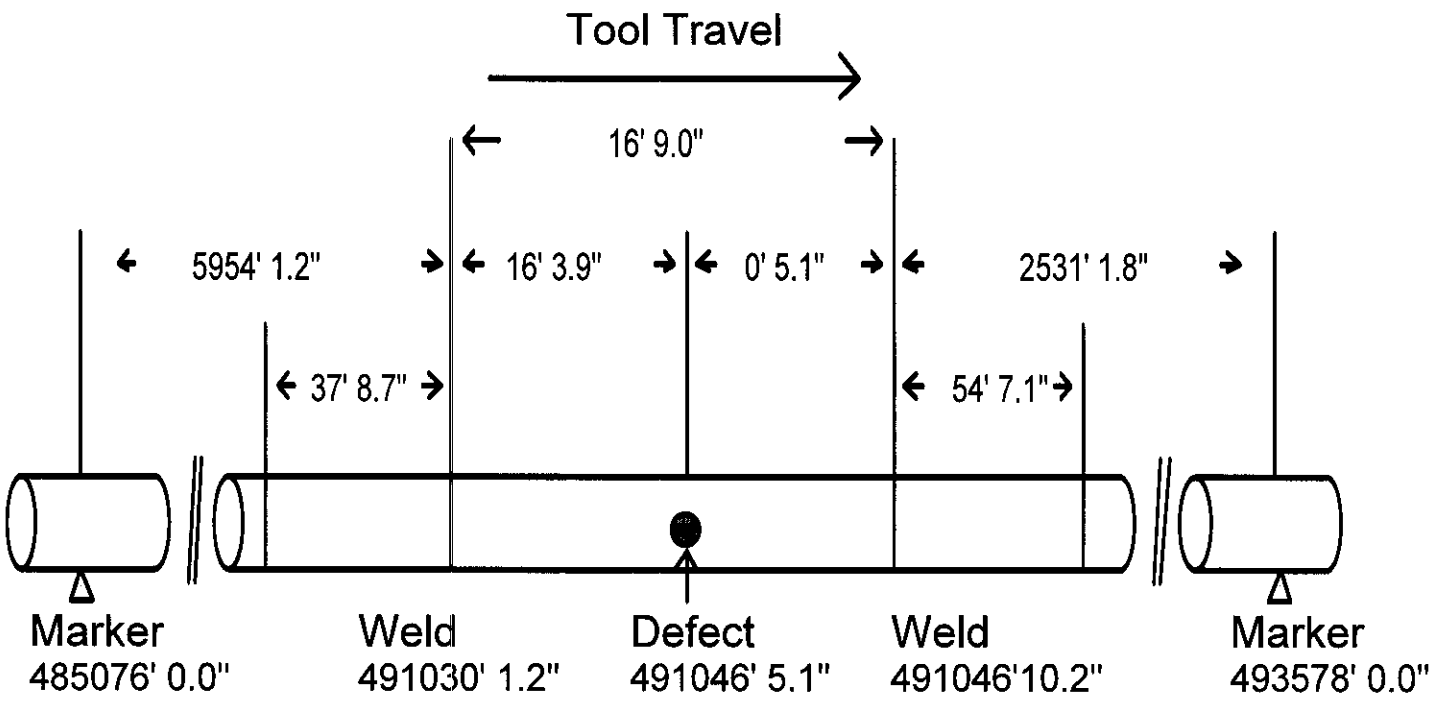

Survey Company:
Dixie Pipeline Co.

Job No.:4769.02

Survey Section:
Hattiesburg - Demopolis

Run Date:05/20/98

Upstream Marker:
Magnet 31 24260+36

Downstream Marker:

Defect #27

****

Defect Wheel Count: 491046' 5.1"

Length: 0' 0.8"

Depth: 24%

Orientation: 1 O'Clk

PR Ratio:

Comments:

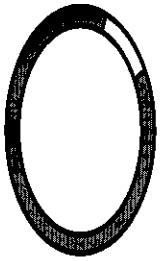

TUBOSCOPE Linalog Plus Defect Report

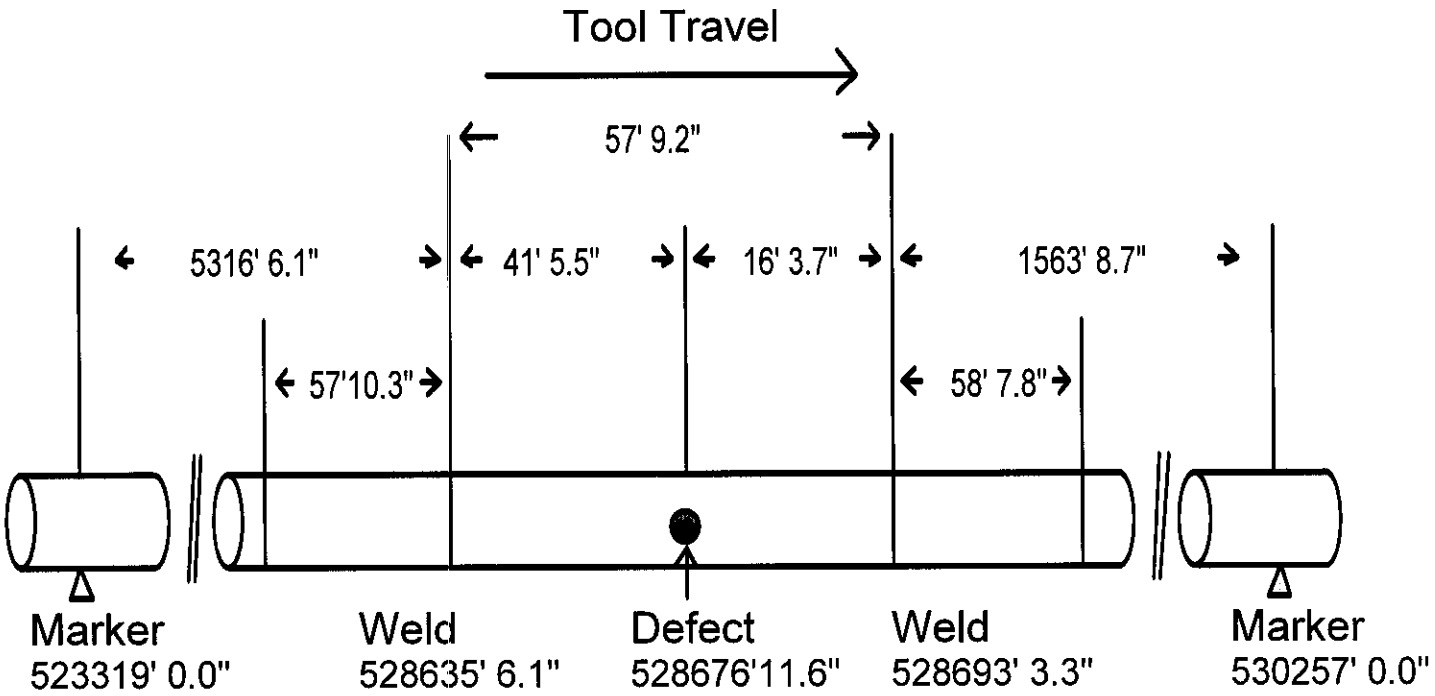

Survey Company:
Dixie Pipeline Co.

Job No.:4769.02

Survey Section:
Hattiesburg - Demopolis

Run Date:05/20/98

Upstream Marker:
LC A-50 MP 467.00 24643+43

Downstream Marker:

Defect #28

****

Defect Wheel Count: 528676'11.6"

Length: 0' 0.4"

Depth: 25%

Orientation: 4 O'Clk

PR Ratio:

Comments:

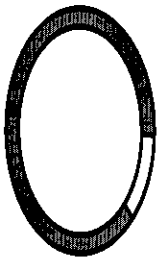

TUBOSCOPE Linalog Plus Defect Report

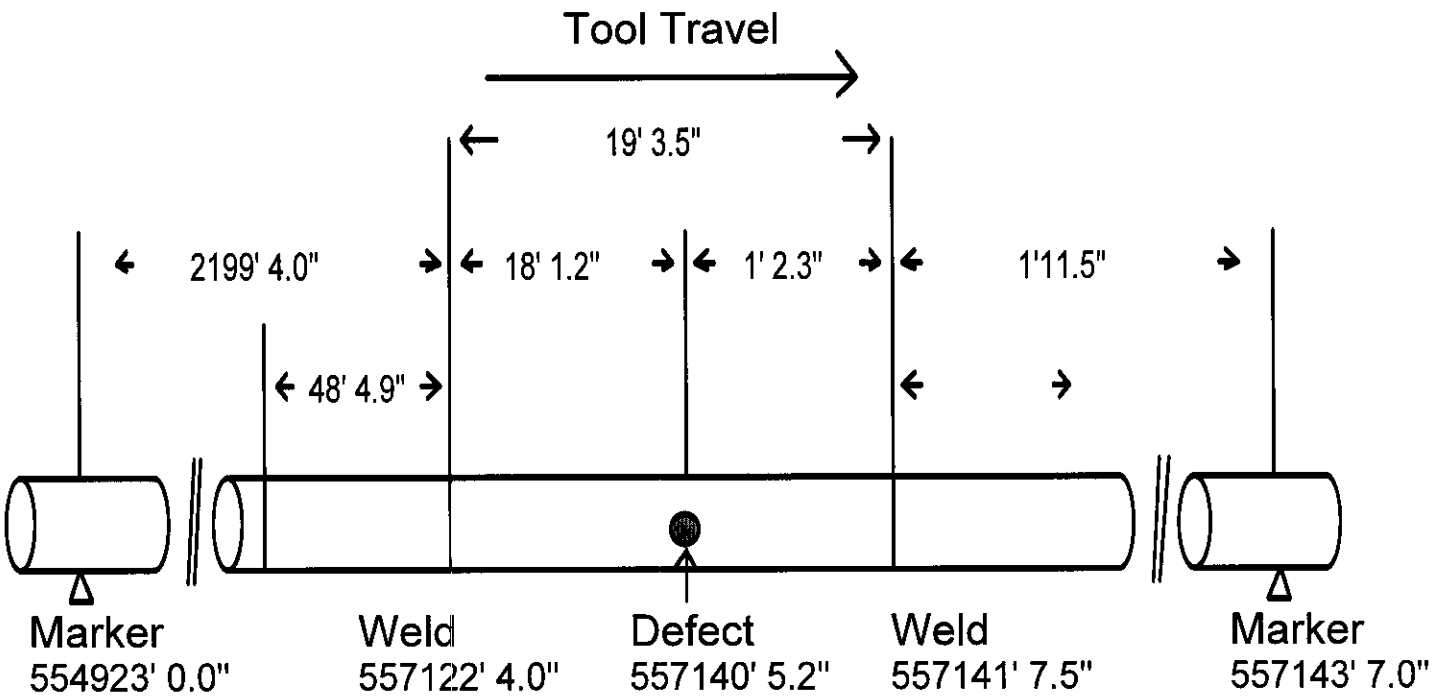

Survey Company:
Dixie Pipeline Co.

Job No.:4769.02

Survey Section:
Hattiesburg - Demopolis

Run Date:05/20/98

Upstream Marker:
Magnet 38 24972+47

Downstream Marker:

Defect #29

****

Defect Wheel Count: 557140' 5.2"

Length: 0' 0.5"

Depth: 22%

Orientation: 1 O'Clk

PR Ratio:

Comments:

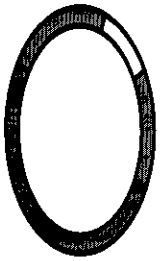

TUBOSCOPE Linalog Plus Defect Report

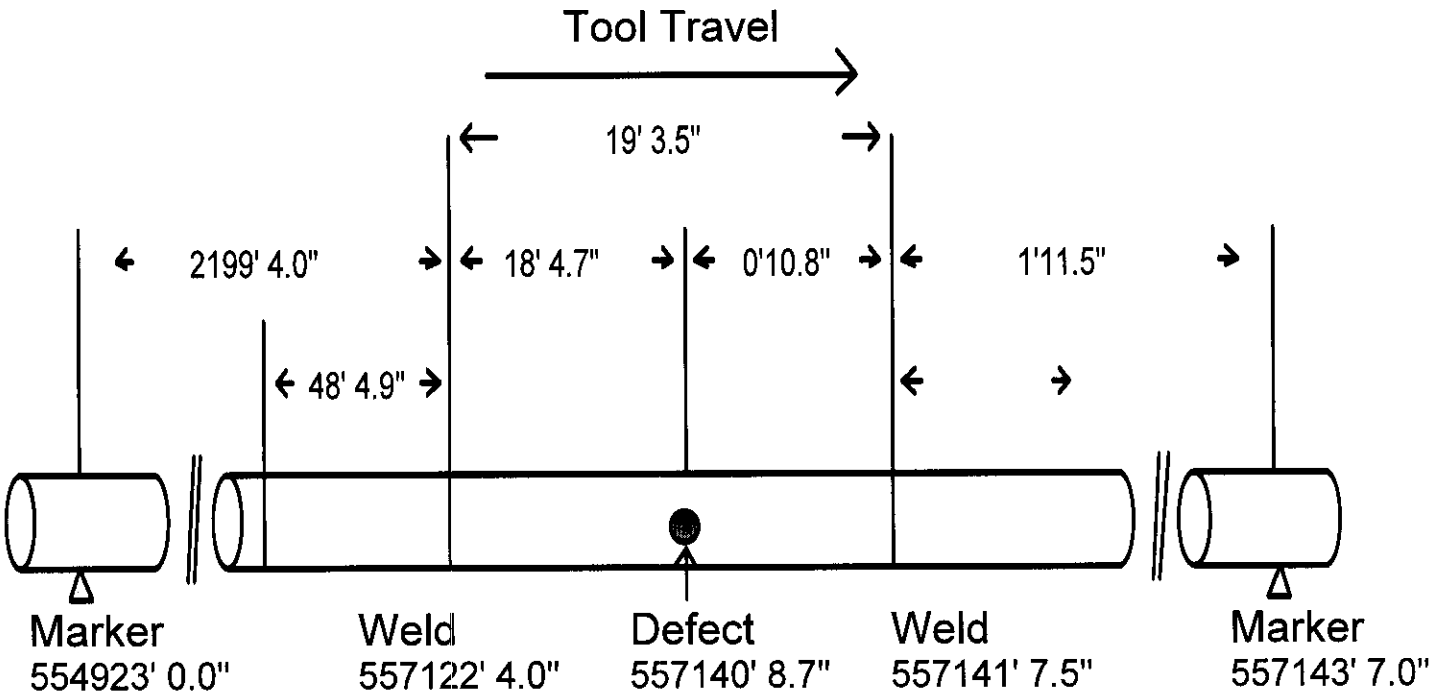

Survey Company:
Dixie Pipeline Co.

Job No.:4769.02

Survey Section:
Hattiesburg - Demopolis

Run Date:05/20/98

Upstream Marker:
Magnet 38 24972+47

Downstream Marker:

Defect #30

****

Defect Wheel Count: 557140' 8.7"

Length: 0' 0.7"

Depth: 25%

Orientation: 1 O'Clk

PR Ratio:

Comments:

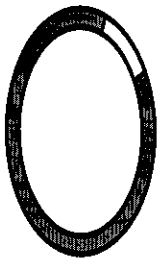

TUBOSCOPE Linalog Plus Defect Report

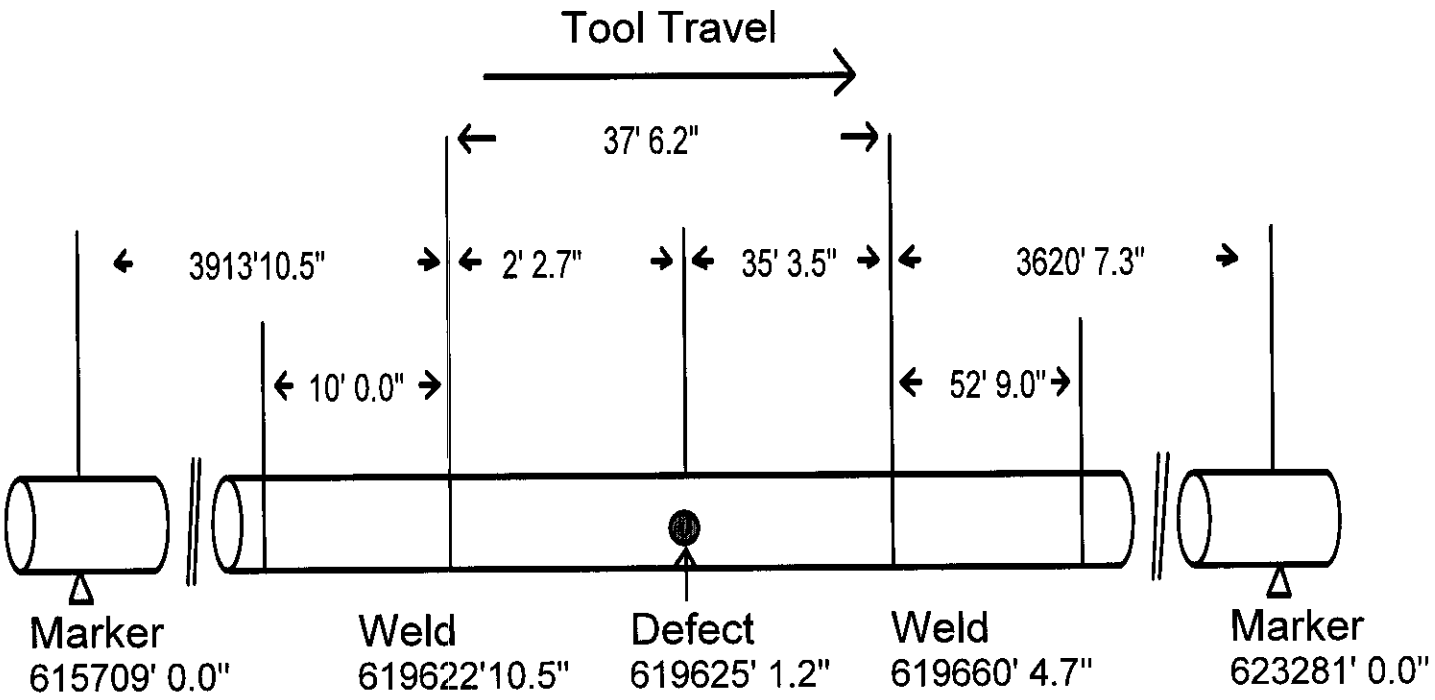

Survey Company:
Dixie Pipeline Co.

Job No.:4769.02

Survey Section:
Hattiesburg - Demopolis

Run Date:05/20/98

Upstream Marker:
Magnet 42 25564+41

Downstream Marker:

Defect #31

****

Defect Wheel Count: 619625' 1.2"

Length: 0' 0.3"

Depth: 39%

Orientation: 5 O'Clk

PR Ratio:

Comments:

TUBOSCOPE Linalog Plus Defect Report

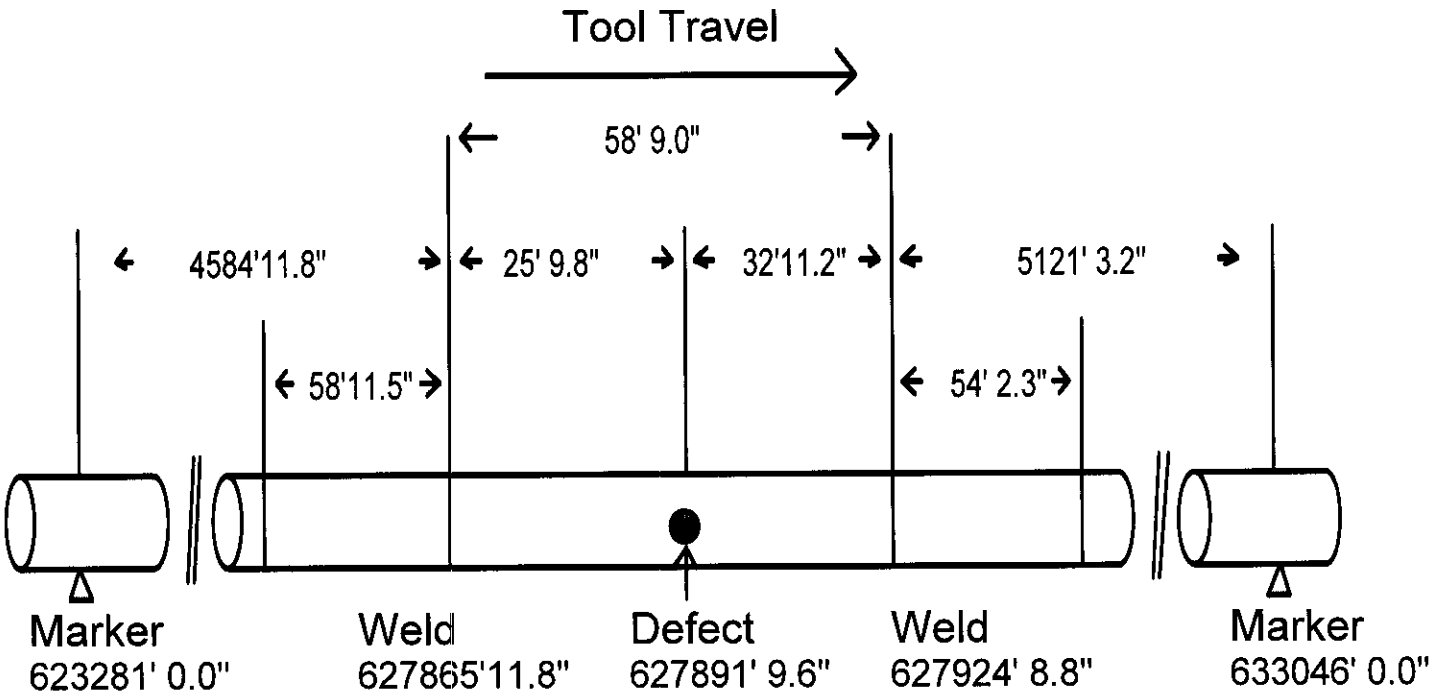

Survey Company:
Dixie Pipeline Co.

Job No.:4769.02

Survey Section:
Hattiesburg - Demopolis

Run Date:05/20/98

Upstream Marker:
Magnet 43 25640+27

Downstream Marker:

Defect #32

****

Defect Wheel Count: 627891' 9.6"

Length: 0' 1.5"

Depth: 25%

Orientation: 10 O'Clk

PR Ratio:
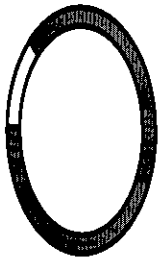
Comments: