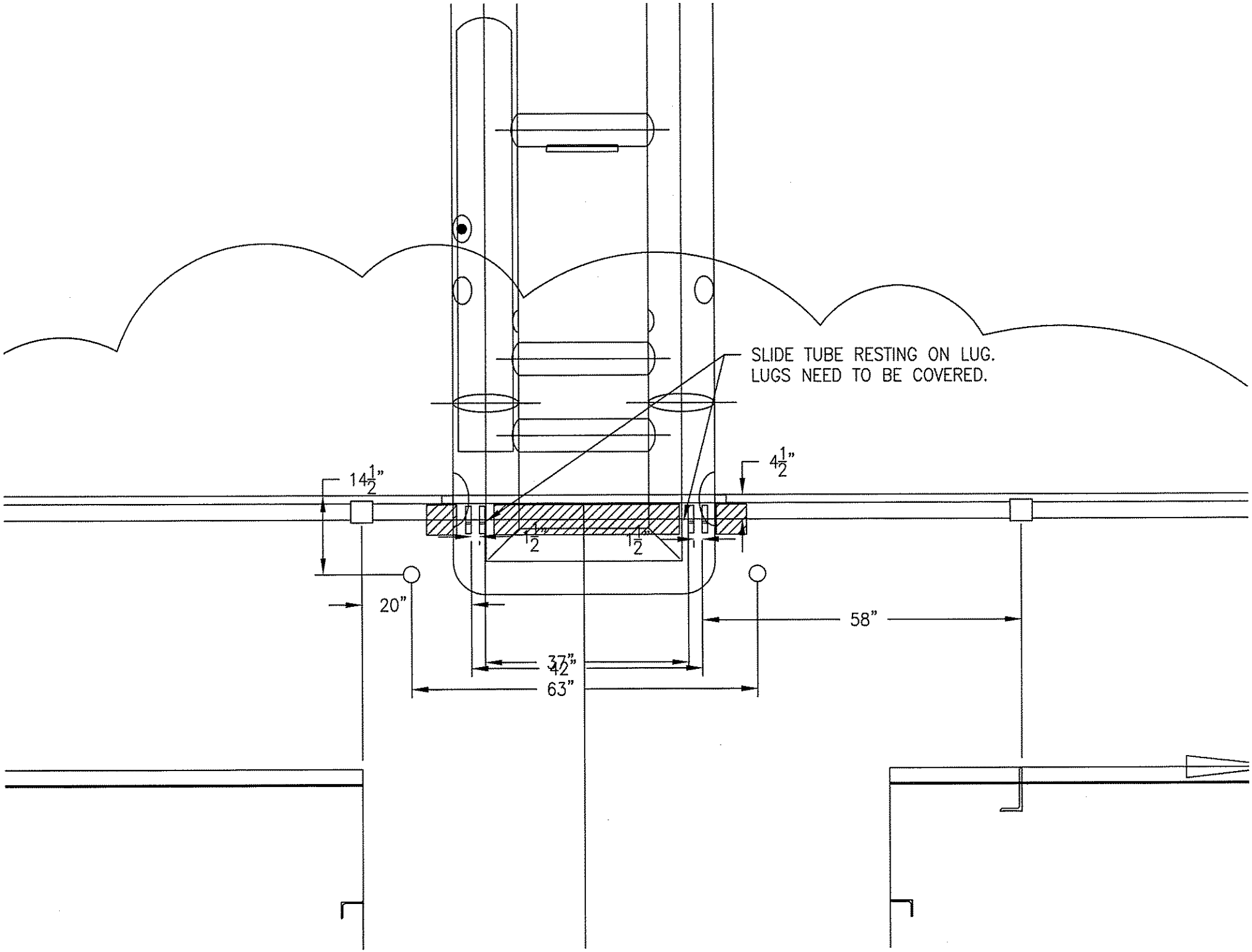
SLIDE TUBE RESTING ON LUG.
LUGS NEED TO BE COVERED.
$14\frac{1}{2}$"
$4\frac{1}{2}$"
$1\frac{1}{2}$"
$1\frac{1}{2}$"
20"
58"
37"
42"
63"