THE ANCHORAGE, INC.
57 MILLER STREET
WARREN, RHODE ISLAND 02885

Whaling City Dredge & Dock Corp.

Buell Street

Groton, Connecticut

St. Moritz
ON-THE-PARK
50 CENTRAL PARK SOUTH, NEW YORK 19, N. Y. • PLAZA 5-5800

182
40
222

1724
836
888
+222
1110
53
333
666
6993

7. 40 whaleur
city Notes
Jan 1966

380
275

19
20
380
18
20

840 6 F
13
4' frame 9.25 8.05
6 frame 9.65
Ray
half fit

36
2
72

2 3/4 x 5/8

38

630

528
52
26
606

18770
9385
28155

550
4
220

145
6
870

7672

13. 9
12
14.

2.00 fut

19
16
114
19
304
275
29

5381
1647
7028
our orig mat. 702
351
8081
their mat 3800
" motor 2800
6600
+15% 990
7590
labor 7672
15262
4350
19612
1961
981
22554

1227
262
1589
8099
38
28

40' II

40#6

			hrs	$
10	Fit & Install Aluminum L & after Clamps		28 1/4	91.49
11	Fit & Install Breast Hook		4 1/2	1039
12	Fit & Install Transom Shelf		11 1/2	2540
20	Make & Install main Bulkhead		7 1/4	1444
30	Make & Install Engine Stringers & Related Members (Includes Water Tank)	does this include APC	19 1/4	3878
80	Make & Install after Cockpit Deck Beams & Sole	*	18	3666
290	Aft Cabin Roof Carlings & Reinforcements		3	735
300	Aft Cabin Bulkhead		16	3479
320	Fit & Install After Cabin Roof		9	2205
			116 3/4	$ 28135

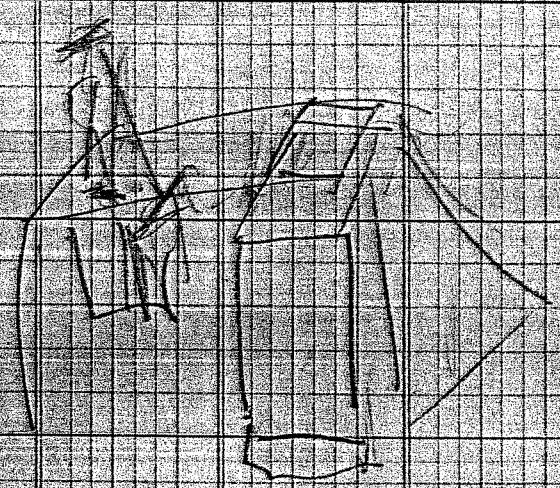

Estimate

Whaling City Dredge Co

MEMO:– ☐ **REQUISITION:–** ☐

To C.B. Sharp Co

From Extras

Received by: Date

40' Hull – 40' #7

Loading 35 hrs. $64.10 D.L. = $167.30

Bow Clamp Moulding $49.00

After Hatch $12.38 42.00

Drafting $131.25 $150.95

409.25

(Cradle ~~47¼ hrs ($88.98)~~)

~~[illegible]~~ $300.00 if wanted.

Work done by: ~~[illegible]~~

Completed:

Inspected by:

Shipped:

Perry Studios ILLUSTRATIVE PHOTOGRAPHERS

820 HARTFORD ROAD WATERFORD, CONNECTICUT 06385 AREA CODE 203 442-3383

COMMERCIAL COLOR PHOTOGRAPHS

LOCATION

One view with either a 4 x 5 Custom Color Transparency or an 8 x 10 Custom Color Print	First view:	$ 38.00
Additional views at the same time, such as catalogue:		25.00
Mileage is charged from portal to portal, per mile		.15
Time is charged in ADDITION to the photograph price, per hour to the nearest half hour:		8.00
When it is necessary to have an assistant on location assignments, the client is notified, and an additional charge is made	per hour	6.00

STUDIO

One view with either a 4 x 5 Custom Color Transparency or an 8 x 10 Custom Color Print.	First view:	38.00
Additional views at the same time, of a similar nature:		25.00
Time is charged in ADDITION to the photograph price, per hour to the nearest half hour:		16.00

DUPLICATE PRINT PRICES

8 x 10 Custom Color Professional prints	1st Print	15.00
	each after	7.50
11 x 14 " " " "	1st Print	25.00
	each after	12.00
16 x 20 " " " "	1st Print	35.00
	each after	25.00

MODELS

We maintain our own Model File and can supply models to enhance various products photographed at a very reasonable rate. However, please give us as much notice as you can. Rates run from a low of $ 10.00 for a quick photograph, to $ 100.00 per day.

MISCELLANEOUS COLOR WORK

8 x 10 Custom Color Transparency, original photography, 1 st View	50.00
" " " additional photos, each after	38.00
8 x 10 Color Print Film (Transparency) From Color Negative	25.00
11 x 14 " " " " " " "	40.00
4 x 5 " " " " " " "	15.00
4 x 5 Color Negative from Color Transparency	15.00
35 MM Color Transparency, either of products, art work or location for slide presentations. Location prices plus mileage and time as above	10.00
Duplicate slides ordered the same time	3.50

(Effective 1 January 1966, subject to revision)

Member of:
Professional Photographers of America, Inc.
Royal Photographic Society of Great Britain
American Society of Magazine Photographers

Represented by:
Design Photographers International, Inc.

FG Propeller Shaft Tube 24
Cut hull, align glass stem
align 8 hrs @ 7 56
Anc Inc 2 men 3 hrs @ 7 42.
APC 2 men 3 hrs @ 7 42
APC material glass + resin
B.J. Bearing est 20 lbs. 20 - PRS
6
Stuffing box - Hose - Clamps
WC 15 Eng Est 100-110
Col.? Strut + Strut bolts 128.
Col.? Rudder 170.
Collar 6.
Fit 5
WC Col. — Rudder Port 21.
Rudder Bearing 5
Labor installing strut
and Rudder 2 men 2½ days
40 hrs @ 7 280.

790

790

Main Deck (Cockpit Sole) with [illegible]
702 3/4 Fir Plywood 8 x 4 x 10 128.
VG Fir or Hemlock KD 120' @ 40
Fastenings + Resin + Glass - 48.
for hull joining + covering
48 yds x 2 layers cloth 96.00
30 lbs mat + 40 lbs resin 50.
galv screws 15
Labor: Cut out stock (8 @ 6) 48.
24 pcs @ 1 hr Install brass 24 @ 6 144.
Install floor 12 hrs 12 @ 6 72
Cover 16 16 @ 6 96.

Total Grand 2 men 3 3/4 days

~~806~~ 650 after Cabin & PC 500.
Inc
46 hrs @ 6 276
Materials Inc. 30
806

90. Loading onto semi trailer 90.
(Can get delivery quotation)
12,248. or 6,000 plus hull
150 Some of the items we are not
12,100 doing:

Installing, storing beyond
furnishing rudder with stock
in place
Seating 3 to 4 wks
Toilet 8 week
Lights
Wiring
Rudder
Propeller
Propeller Shaft
Coaming
Oak Guards
Spray Rails
Vents to Engine
Exhaust
Engine installation
Drawings
Ask for Bath check

40' #8

Labor + O.H.	4,555.76
Material	4,919.30
A.P.C.	4,500.00 ?
	13,974.06
	120.00
C Street	14,094.06
APG	1,409.41
405 d	704.70
	16,208.17

parkhatchy
rear cabin
hull
stringers
bow pieces
clamps + knees

clamps + angle
shaft log
fusing deck
glassing floor
glass rear plywood
+ part

[illegible]
angling
cradles [illegible]
crewing [illegible]
fish + wildlife service, crash boat,
island commuter to name a few,

Alum
RPM
water
electric
Each
56½ wide
36"
40"
36" box
Each

36"
40"
36" box

MEMO:– ☐ **REQUISITION:–** ☐

To .....

From .....

Received by: Date.....

– shaft is bronze –

– no cover for 12½ –

call Lisa and
212-765-0235
Show No

Work done by: .....

Completed:

Inspected by:

Shipped:

7'11 Sailing
Bob Brainninger

Order
16 - 20

38 45
38 45
76
90
166

170 Rigid Vinyl
Angle 1 x 1"
~~legs~~ per our
discussion
Feb 18th
including
die at approx

400
3000
20
600

Good revers
Parliament
Amer 20 -
Throttle
on handle
twist
or foot
big rudder
turn in own
length
Palmer
16 at Pt Wash
25 hp. Universal
Tow 45
4

15-18
people
60 hp.
big
mop

$10

First on 16' Carr

Cost Summary Page	[illegible]
Model	Cover Spray [illegible] & Ext
Customer	at house
Major variations	Remove name [illegible]
	[illegible]
	clean & fix floor boat -
Total Hrs	Gifford D. Warner
Accountable to	SO 7-8806
Extras	
Boat Itself	Storage & laundry $600 immediately by May 1st
Direct Total Labor	
Total Materials other than APC	Bootton ~~End~~ Royal Blue
Boat:	Windshield coming
Extras:	
APC Chgs	20" on P Nicho
Boat	between box & Ped -
Extras	
	Call Huntzre 600
Total Cost	work [illegible]
Net Return @ Dealer Dis	26.64 with power 399.60
Dif.	

Wilcox Crittenden
filed invol.
of Bankruptcy
— no trustee

Replied to that
no payable
Oct 1st on

1 Red Sail

BHC 15
@1.50 net

1

White Hall

James Moffett

Pres Corn Products
$375,000 Mayola

Chairman of Bd
Durkee Co.

E Hampton
Tony Bidwell Duke
Boys Harbor Club

contribution

12 1/2 - $950 -
contribution
Send as his ck

55 ea. frt.

cash in advance

moffats son in law
Gahagan Dredging Co.
1/2 million in business
$150,000 / pay off
used Durkee Co.

resigned as office &
directors Dec 24th

JAN	FEB	MAR -1966- APR		MAY	JUNE
S M T W T F S	S M T W T F S	S M T W T F S	S M T W T F S	S M T W T F S	S M T W T F S
1 / 2 3 4 5 6 7 8 / 9 10 11 12 13 14 15 / 16 17 18 19 20 21 22 / 23 24 25 26 27 28 29 / 30 31	1 2 3 4 5 / 6 7 8 9 10 11 12 / 13 14 15 16 17 18 19 / 20 21 22 23 24 25 26 / 27 28	1 2 3 4 5 / 6 7 8 9 10 11 12 / 13 14 15 16 17 18 19 / 20 21 22 23 24 25 26 / 27 28 29 30 31	1 2 / 3 4 5 6 7 8 9 / 10 11 12 13 14 15 16 / 17 18 19 20 21 22 23 / 24 25 26 27 28 29 30	1 2 3 4 5 6 7 / 8 9 10 11 12 13 14 / 15 16 17 18 19 20 21 / 22 23 24 25 26 27 28 / 29 30 31	1 2 3 4 / 5 6 7 8 9 10 11 / 12 13 14 15 16 17 18 / 19 20 21 22 23 24 25 / 26 27 28 29 30
JULY	AUG	SEP	OCT	NOV	DEC
1 2 / 3 4 5 6 7 8 9 / 10 11 12 13 14 15 16 / 17 18 19 20 21 22 23 / 24 25 26 27 28 29 30 / 31	1 2 3 4 5 6 / 7 8 9 10 11 12 13 / 14 15 16 17 18 19 20 / 21 22 23 24 25 26 27 / 28 29 30 31	1 2 3 / 4 5 6 7 8 9 10 / 11 12 13 14 15 16 17 / 18 19 20 21 22 23 24 / 25 26 27 28 29 30	1 / 2 3 4 5 6 7 8 / 9 10 11 12 13 14 15 / 16 17 18 19 20 21 22 / 23 24 25 26 27 28 29 / 30 31	1 2 3 4 5 / 6 7 8 9 10 11 12 / 13 14 15 16 17 18 19 / 20 21 22 23 24 25 26 / 27 28 29 30	1 2 3 / 4 5 6 7 8 9 10 / 11 12 13 14 15 16 17 / 18 19 20 21 22 23 24 / 25 26 27 28 29 30 31

LAST MONTH

1966 February 1966

S	M	T	W	T	F	S
		1	2	3	4	5
6	7	8	9	10	11	12
13	14	15	16	17	18	19
20	21	22	23	24	25	26
27	28					

1966 MARCH 1966

S	M	T	W	T	F	S
		1	2	3	4	5
6	7	8	9	10	11	12
13	14	15	16	17	18	19
20	21	22	23	24	25	26
27	28	29	30	31		

NEXT MONTH

1966 April 1966

S	M	T	W	T	F	S
					1	2
3	4	5	6	7	8	9
10	11	12	13	14	15	16
17	18	19	20	21	22	23
24	25	26	27	28	29	30

TUESDAY 29 MARCH

ENGAGEMENTS	MEMORANDA
8:00	
8:30	
9:00	
9:30	
10:00	
10:30	
11:00	
11:30	
12:00	
12:30	
1:00	
1:30	
2:00	
2:30	
3:00	
3:30	
4:00	
4:30	
5:00	
5:30	3/29/66

MEMO:– ☐ REQUISITION:– ☐

To .....

From .....

Received by: Crandall Date .....

Bronze Struts	64.30	150.00
Bolts etc	5.95	6.00
Rudders.	80.84	200.
Collar.		6.20
Freight	2.40	3.00
Rudder Ports	24.15	24.15
Dayfish Marine B.J. Bearing	4.11	4.11
Misc. Washers	4.27	4.50
70½ hrs.	186.02	
		397.96

FG Tube

Work done by: .....

Completed:

Inspected by: Games & Helper 60 hrs.

Shipped: Direct Labor $136.80

2.45
2.10
2)4.55 | 2.28

2.28
60
136.80

#8

Thru

4/23

1.50
60.00
22.00
109.00
79.00
96.50
99.50
33.25
42.50
40.75
50.75
80.25
54.25
769.25 s
9.00
15.25
10.00
1.00
1.00
4.00
2.00
2.50
814.00 s
3.00
2.25
17.50
12.50
.75
40.25
2.75
9.00
6.50
4.50
2.00
7.50
3.00
925.50 s
55.75 -
869.75 *

925 1/2
814
11
1

886

#9

thru

4/16

5.75
22.00
30.50
98.25
108.00
118.00
74.00
456.50 s
55.75
512.25 *

69 1/4
50 1/2
79

2.75
9.00
6.50
4.50
2.00
7.50
3.00
925.50 s
55.75 -
869.75 *

886

925 1/2
814
111

#9

[illegible]
4/16

5.75
22.00
30.50
98.25
108.00
118.00
74.00
456.50 s
55.75
512.25 *

69 1/4
50 1/2
79
13

724

Price quoted one $22,875, two $21,830

Subtract anchor 25# Sea Claw	10.
anchor warp 150' 5/8 nylon	38.
two 50' nylon tie lines	18.
sink (20) w/ water tank (30) + pump (5)	55.
Jabsco 1¼" off eng pump (90) (~~electric~~ rise PAR ~~4290~~ 4615 Sea Gulp + 4290 Stirrup PAR)	
simpler head 80 hrs inst of 160	440.
" steering station + aft blkhd. cut dk + blkd 4 hrs, install (trim 8 mt wheel 4 panel 2 seat 2 pt 4) 24 instead 40	99.
	660

Increase life preservers from 40 to 50 Adults + 10 C	100
" if we to deliver to Groton including	200
wiring for sound system	50
deck cleats 8 - 12" Fig 409 Galv. @ 6.50 52.00 instead of 33. allowed	19.
railing - allowed 370 220 + labor 590 ought to be ample	—
Searchlight	30.
larger prop 24 x 17	—
2 - 15# CO_2's w/ brackets allowed (105) 40	65
1 5# ditto @ 7.50 per 2½ lb.	
Groco HD-1250 Duplex Strainer 1 1½	45.
C-201-5 Rescue Light 8 hr	30
24" Life Ring	20
KTD-12 Horn	20
Muffler M-225 (1) Elasto over WC	60.

Increase	lifepreservers from 40 to 50 Adults + 10 C	100
"	if we to deliver to Groton including	200
	wiring for sound system	50
	deck cleats @ 6.50 52.00 8 - 12" Fig 409 Galv. instead of 33. allowed	19.
	railing - allowed 370 + labor 220 590 ought to be ample	—
	Searchlight	30.
	larger prop 24 x 17	—
	2 - 15# CO_2's w/ brackets allowed (105) 40	65
	1 5# ditto @ 7.50 per 2 1/2 lb	
	Groco HD-1250 Duplex Strainer 1 1/2	45.
	C - 201-5 Rescue Light 8 hr	30
	24" Life Ring	20
	KTD-12 Horn	20
	Muffler M-225 (1) Elasto over WC	60.
	2 - Boat Hooks #244 #4 Galv - instd	7.~~00~~
	SFDT - 200 Amp Knife Switch	25.
	2 SPST - 200 Amp " "	50
	3,' #33 Cable	10
	aluminum molding	40
		771

MEMO:– ☐ **REQUISITION:–** ☐

To .....

From .....

Received by: Date.....

Sharp:
40'
not over 60

Stability Test
Wentworth
Hull Inspector

Prov. Office
Marine Insp.
Prov. Office
Hull
Fletcher
No of people

What other drawings

Sections
Lines
Gustafson
Chilletti
Grimmel

$0 or 50 Very much int.

every 30" lengths
every 18" athwart
David Bourne - N. Architect Electric Boat
Tankage - Flotation
Design
Road Pulaski
into water

Work done by: .....

Completed: River Use

Inspected by:

Shipped: New London Harbor & Thames RR
RR Bridge CG323 June 1 1961

Design green 8 1/2 x 11 1/4 Not over 65.
C Rules & Regs for Small Pas Vessels

Basis of check.

4350. A P C components

6993 Labor @ 6.30 — hrs 1724 for cruise lunch less
836 for omission
888 hrs

700 10% — 222 for additions
1110

6726 Materials — 7764
− 2383 for omission
5381
+ 734
6115
611 pl cont. NO1
6726

18769
2815 (15%
21584
22700
21600 on 2

1110 210

501
211
501
501
1002
10571

3001 10572
1002
558
500
582
500
820

2881
0041

Raritan Standard Toilet	60.00
Gasco or WC 1½ Sea Cox	18.23
3/4	5.61
1½ Flex Hose	1.94
Clamps for	94
1¼ Jabsco Pump Clutch Operated	90.
1¼ Thru Hull	3.60
Water Deck Plate	7.00
Hand Bilge Pump Par Sea Master	15.00
Pack Up Strainer	2.10
Thru Hull	3.58
Sink	20.
Water Tank	30
20' 1¼ Hose	14.80
Paper Holder	2.00
Galley Pump HC Sea Galley	5.00
Deck Hardware 3 - 12" Cleats	19.50
4 - 8"	13.50
Fastening	7.50
Paper Deck Cover	6.76
Ventilators 2 - 4" dia 2 in at bas Galv.	5.40
Anchor 25 Sea Class (No Pine)	9.90
Anchor Chocks	3.04
Bell & Bracket	3.83

Neck Up Shrouds	2.10
Flow Hill	3.58
Sink	20.
Water Tank	30
20' 1 1/4 Hose	14.80
Paper Holder	2.00
Galley Pump HC Sea Galley	5.00
Deck Hardware 3 - 12" Cleats	19.50
4 - 8"	13.50
Fastenings	7.50
Pipe Deck Cover	6.76
Ventilators 2 - 4" dia 2 in at bas Galv.	5.40
Anchor 25 Sea Claw (No Pins)	9.90
Anchor Chocks	3.04
Bell & Bracket	3.83
Boat Hook w/bracket	7.00
#8 Flag Staff	4.46
Transom Flush Pole Socket	1.53
No Compass	
Nylon Anchor Warp 150 5/8" including 10' 3/8" BBB Chain & shackle	38.00
- 50' Mc Lean 1/2" nylon	78.00

122.32

935
6.3
2805
5610
58905

40'6 Reqd 610 hrs
To complete Quoted to reds 10,788.
J Gest'd w/RL 935 hrs @ 2.10 + 0.4 + 15 = 5,890.
+15 = 5267.
Materials 21,945.

D-110V 1½ to 1 or 2 to 1 Palmer with Paragon
Reduction Gear and 1 3/8 shaft coupling
40 amp alt. fresh water cooling 2800
Aux V Pulley Double 15
Instrument Panel 54 -25
Tach Cable 20' 27
MT Single Morse Control 65 - (36)
" " " Cables 26 - 40
Rubber Mts 30
Wet Exhaust Elbow 47 (44) 25
Riser 100
Crating 16 & fit 60 77 net
W-C Muffler - Hi Duty (others less) 54 - 34 17
+3 fit
from Bill Material #6 Fuel System
Gas Fill 3.15 net
Vent 9.85
3/4 Nylon Adaptors .30
Pipe 4.20
Adaptors 6.15
Neoprene Hose 1½ 4.23
Hose Clamps 1.16

$724.
23 materials

Pass Cement Panel	54	-25
Tach Cable 20'	27	
M T Single Morse Control	65	-(36)
" " " Cables	26	-40
Rubber Mts	30	
Wet Exhaust Elbow	47	-25 (44)
Riser	100	
Crating 16 & fwd 60	77 net	
W-C Muffler - H Duty (others less)	54 - 34	-17
		+3 fwd
from Bill Material #6 Fuel System		
Gas Fill	3.15 net	
Vent	9.85	
3/4 Nylon Adaptors	.30	
Pipe	4.20	
Adaptors	6.15	
Neoprene Hose 1 1/2	4.23	
Hose Clamps	1.16	
	+.84	
Neoprene Hose 3/4 10'e	2.50	
3/8 Shut Off Valve	6.00	
Gauge - Temp	12.00	
Flex Fuel Line 3/8 & 24	4.85	
other [illegible]	[illegible]	

2541.23 materials

Guards - Oak	30.00
Galv 5/16 Fastenings	5.00
~~Brass Hatch Rd~~	
10' Battery Cable 2/0	5.40
4 Terminals	1.40
Grounding Engine to Stand #6 Copper	4.60
#12+14 wire -	5.00
1 Battery, Mail or Prestolite	22.00
Switch - Running Lights	2.00
Aft Cabin Switch	2.00
~~Engine Compartment~~ Light	4.50
Light on Head	4.50
Bow Lt - Wing Typ	4.48
Side Lts " " Typ	11.05
Stern Light	3.94
Battery Box	5.00
Propeller Est. 24" dia 10% -25%	90.
Tobin Bray Shaft 1 3/8 x 12 est 1 1/2 x 10	~~140~~ 146.
FG Exhaust Pipe est & Hose	45.
Edson Tiller Arm	26.
Steering Wheel F122220 Essex	25.
Segment & worm gear & vertical shaft	260.

Aft Cabin Switch	2.00
~~Engine Compartment~~ Light	4.50
Light in Head	4.50
Bow Lt - Wing Typ	4.48
Side Lts " " Type	11.05
Stern Light	3.94
Battery Box	5.00
Propeller Est. 24" dia 10⁴ -25%	90.
Tobin Brg Shaft 1 3/8 x 12 est 1 1/2 x 10	~~140~~ 146.
FG Exhaust Pipe est + Hose	45.
Edson Tiller Arm	26.
Steering Wheel F122220 Essex	25.
Segment + worm gear + vertical shaft	260.
1 1/4 Half Rd Oval Brass Guard	115.
Fastenings	5
40 Life Preserver	240.
Benches	440.
Exhaust	40.

Thompson 15-3-68

Lumber & Plywood fastenings
coamings & after cabin 60.00

Paint 20.00

Fuel Oil Tank Measure

4/22/00

Inches of Fuel in Tank	Gallons of Fuel in Tank	Gallons to fill Tank
0	0.0	100.0
½	2.8	97.2
1	5.6	94.4
½	8.4	91.6
2	11.1	88.9
½	13.9	86.1
3	16.7	83.3
½	19.5	80.5
4	22.2	77.8
½	25.0	75.0
5	27.8	72.2
½	30.6	69.4
6	33.4	66.6
½	36.2	63.8
7	38.9	61.1
½	41.7	58.3
8	44.5	55.5
½	47.3	52.7
9	50.0	50.0
½	52.8	47.2
10	55.6	44.4
½	58.4	41.6
11	61.2	38.8
½	64.0	36.0
12	66.7	33.3
½	69.5	30.5
13	72.3	27.7
½	75.1	24.9
14	77.8	22.2
½	80.6	19.4
15	83.4	16.6
½	86.2	13.8
16	89.0	11.0
½	91.8	8.2
17	94.5	5.5
½	97.3	2.7
18	100.0	0.0

Dyercraft 40 #8

Built for Whaling City Dredge & Dock Corporation

Completion Date APRIL 26, 66

Date of Final Coast Guard Inspection APRIL 26, 66

Dyercraft Name Plate 40 #8

Lathrop D-110-V Marine Diesel, Serial No. 9756601

✓ Keys on Dyercraft Key Float

✓ Engine Maintenance Manual & Parts List

✓ 3" Copper Exhaust pipe & muffler

✓ Complete Steering station & engine controls - Morse

✓ Paragon reverse Gear, shaft, wheel 5E 1964

✓ 2 6 Volt Batteries hooked in series

✓ Lead Lined Battery Box

✓ Lighting Terminal switch box

✓ Navigational & compartment lights

✓ Dome light

✓ Wiring for Public address system

✓ Electric horn

✓ Search light #2 12 Volt

✓ 100 Gal. Fuel Tank with complete piping & bonding

✓ Fuel tank vent.

✓ Auxiliary Bilge Pump, Serial No. F120-15

✓ Manual Bilge pump

✓ Portable CO_2 Fire extinguishers 15 lb. (engine Room) 15 lb. (gas tank Room) 5 lb. (Steering station) & located

✓ 4 Screened Compartment ventilators

✓ Life preserver container

✓ Life Preservers No. 50 Adult 10 Children

✓ Life Ring 24" with rescue light

Deck Hardware:

- ✓ 2 Bow chocks
- ✓ 8 Cleats
- ✓ Anchor chocks
- ✓ Flag Pole socket & Staff Fwd.
- ✓ Flag Pole Socket & Staff aft.
- ✓ 2 Boat hooks

Safety Rail

Safety Gate Chains - 2
Complete Passenger Seating for 48

4 Deck lines 3/4" Manila 30' Long
Anchor line 150' 1" Manila with spliced eye

Anchor

8" Ships Bell

Painting:

Bottom	2	Coats
Deck	3	Coats
Rails	3	Coats
Chairs	3	Coats

Lettering on Transom

Registration Nos on Bow

Lettering on Life Jacket Storage

Manual Toilet

3 Bronze Drain Plugs Forward center Aft

Box for Public address system

Operators Seat

2 Main Deck scuppers

Fuel Tank Filled

- Safety Rail

- Safety Gate Chains - 2
- Complete Passenger Seating for 48

- 4 Deck lines 3/4" Manila 30' Long
- Anchor line 150' 1" Manila with spliced eye

- Anchor

- 8" Ships Bell

Painting:

Bottom	2	Coats
Deck	3	Coats
Rails	3	Coats
Chairs	3	Coats

- Lettering on Transom

- Registration Nos on Bow

- Lettering on Life Jacket Storage

- Manual Toilet

- 3 Bronze Drain Plugs Fwd center aft

- Box for Public address system

- Operators Seat

- 2 Main Deck scuppers

- Fuel Tank Filled

- SELF IGNITING WATER LITE

Dyercraft 40 #9

Built for Whaling City Dredge & Dock Corporation

Completion Date [illegible]

Date of Final Coast Guard Inspection May 9, 66

Dyercraft Name Plate 40 #9

Lathrop D-110-V Marine Diesel, Serial No. 9766601

✓ Keys on Dyercraft Key Float

✓ Engine Maintenance Manual & Parts List

✓ 3" Copper Exhaust pipe & muffler

✓ Complete Steering station & engine controls - Morse

✓ Paragon reverse Gear, shaft, wheel SERIAL NO 5C 2607

✓ 2 6 Volt Batteries hooked in series

✓ Lead Lined Battery Box

✓ Lighting Terminal switch box

✓ Navigational & compartment lights

✓ Dome light

✓ Wiring for Public address system

✓ Electric horn

✓ Search light #2 12 Volt

✓ 100 Gal. Fuel Tank with complete piping & bonding

✓ Fuel tank vent.

✓ Auxiliary Bilge Pump, Serial No. 026 - 18

✓ Manual Bilge pump

✓ Portable CO_2 Fire extinguishers 15 lb. (engine Room) 15 lb. (aft Cabin) 5 lb. (Steering station) & located

✓ 4 Screened Compartment ventilators

✓ Life preserver container

✓ Life Preservers No. 50 Adult 10 Children

✓ Life Ring 24" with rescue light

Deck Hardware:

- ✓ 2 Bow chocks
- ✓ 8 Cleats
- ✓ Anchor chocks
- ✓ Flag Pole socket & Staff Fwd.
- ✓ Flag Pole Socket & Staff aft.
- ✓ 2 Boat hooks

Perry Studios ILLUSTRATIVE PHOTOGRAPHERS

820 HARTFORD ROAD WATERFORD, CONNECTICUT 06385 AREA CODE 203 442-3383

COMMERCIAL COLOR PHOTOGRAPHS

LOCATION

One view with either a 4 x 5 Custom Color Transparency or an 8 x 10 Custom Color Print First view:	$ 38.00
Additional views at the same time, such as catalogue:	25.00
Mileage is charged from portal to portal, per mile	.15
Time is charged in ADDITION to the photograph price, per hour to the nearest half hour:	8.00
When it is necessary to have an assistant on location assignments, the client is notified, and an additional charge is made per hour	6.00

STUDIO

One view with either a 4 x 5 Custom Color Transparency or an 8 x 10 Custom Color Print. First view:	38.00
Additional views at the same time, of a similar nature:	25.00
Time is charged in ADDITION to the photograph price, per hour to the nearest half hour:	16.00

DUPLICATE PRINT PRICES

8 x 10 Custom Color Professional prints	1st Print	15.00
	each after	7.50
11 x 14 " " " "	1st Print	25.00
	each after	12.00
16 x 20 " " " "	1st Print	35.00
	each after	25.00

MODELS

We maintain our own Model File and can supply models to enhance various products photographed at a very reasonable rate. However, please give us as much notice as you can. Rates run from a low of $ 10.00 for a quick photograph, to $ 100.00 per day.

MISCELLANEOUS COLOR WORK

8 x 10 Custom Color Transparency, original photography, 1 st View	50.00
" " " additional photos, each after	38.00
8 x 10 Color Print Film (Transparency) From Color Negative	25.00
11 x 14 " " " " " " "	40.00
4 x 5 " " " " " " "	15.00
4 x 5 Color Negative from Color Transparency	15.00
35 MM Color Transparency, either of products, art work or location for slide presentations. Location prices plus mileage and time as above	10.00
Duplicate slides ordered the same time	3.50

(Effective 1 January 1966, subject to revision)

Member of:
Professional Photographers of America, Inc.
Royal Photographic Society of Great Britain
American Society of Magazine Photographers

Represented by:
Design Photographers International, Inc.

FG Propeller Shaft Tube 24
Cut hull, align glass stem
align 8 hrs @ 7 56
Ave Line 2 men 3 hrs @ 7 42.
APC 2 men 3 hrs @ 7 42
APC material glass + resin
B.J. Bearing est 20 lbs. 20 - PRS
6
Stuffing box - Hose - Clamps
WC 15 Emery Est.
Col.? Strut + Strut bolts 128. 100-110
Col.? Rudder 170.
Collar 6.
Fit 5
WC Col. — Rudder Port 21.
Rudder Bearing 5
Labor installing strut
and Rudder 2 men 2½ days
40 hrs @ 7 280.

790

790

Main Deck (cockpit sole) with ratches
702. 3/4 Fir Plywood 8 x 4 x 10 128. Act 131.
VG Fir or Hemlock KD 120' @ 40
Fastenings + Resin + Glass - 48. Act 35.
for hull joining + covering
48 yds x 2 layers cloth 96.00
30 lbs mat + 40 lbs resin 50.
galv screws 15
Total Equiv 2 men 3 3/4 days
Labor: Cut out stock (8 @ 6) 48.
24 pcs @ 1 hr Install beams 24 @ 6 144.
Install floor 12 hrs 12 @ 6 72.
Cover 16 16 @ 6 96.

Reg. How soon
Bills. " "

Original
40'

Quotation for C B Sharp Groton

6250. Dyercraft 40 hull
585. Frd. aluminum clamps
aft wooden clamps
Transom wooden shelf.

2540. Forward and side
pos. less as decks as sketch
aft deck eliminated (? with flange for
coaming R.S)

RS

365. Engine stringers for
diesel motor (175)
including integral
100 gallon tank
with deck fill + vent

(R.S - 4 stringers w/no tank
had been quoted at
275)

120. Install anodes hyps
bulkhead
23.30
4 x 12 x 3/4 ply @ 48½ + 4.50 fxt
glass + resin 10.00
37.80
Labor 10 @ 7.00 + 8.00 = 20% mark up
4.60 10% cont.
5040

5860

850
650

650 ~~806~~ After Cabin APC 500.

Inc

46 hrs @ 6 276

Materials Inc. 30

806

90. Loading onto single trailer 90.
(Can get delivery quotation)

12,248. or 6,000 plus hull

150 Some of the items we are not
12,100 doing:

Installing steering beyond furnishing rudder with stock in place

3 to 4 wks

Seating

Toilet

8 wks

Lights

Wiring

Railing

Propeller

Propeller Shaft

Coaming

Oak Guards

Spray Rails

Vents to Engine

Exhaust

Engine installation

Drawings

Ask for Beetle check

40' #8

Labor + O.H.	4,555.76
Material	4,919.30
A.P.C.	4,500.00 ?
	13,974.06
	120.00
C Strat	14,094.06
APG	1,409.41
405	704.70
	16,208.17

partial beds — clamps + rangs
rear cabin — shaft log
hull — fussing deck
stringers — glassing floor
bow pieces — gears rear plywork + paint
clamps + knees

[illegible]

Barnstable Marine Svc
" Harbor
" Mass

Mr. Van Duzer

Dennis Marina
Sesuit Harbor
East Dennis, Mass
Ralph Litchfield
Finished boats

12 or 15 Outboard Marine

Hewitt Rubber Co

[illegible]

Electric
water
Alum
10-6
9-4
Each
56½
36"
40"
36" box

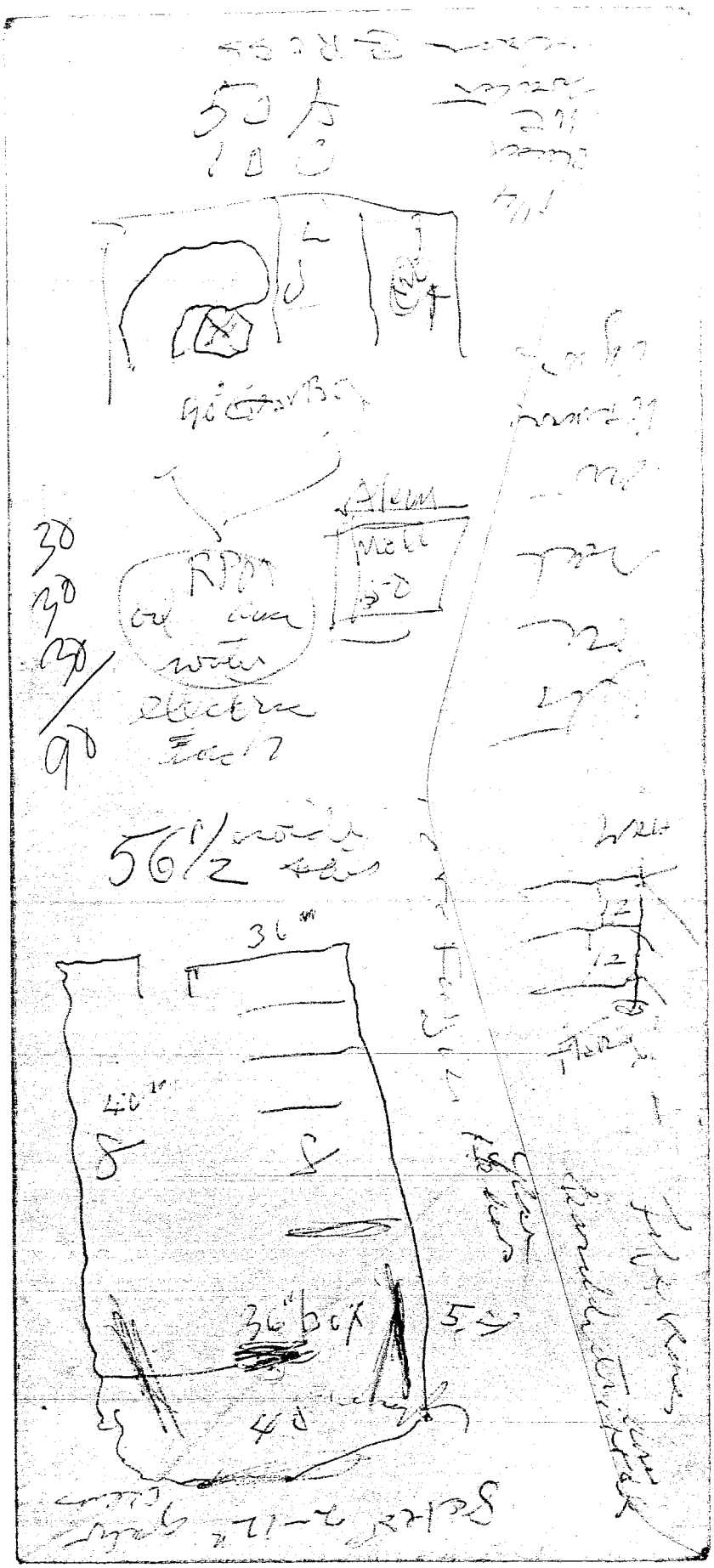

RPM
Alum
Mold
56 1/2
36"
40"
36" box

THE ANCHORAGE INC.
12 MILLER STREET
WARREN RHODE ISLAND 02885

Mr. G. B. Sharp, President
Whaling City Dredge & Dock Corp.
Buell Street
Groton, Connecticut

MEMO:– ☐ **REQUISITION:–** ☐

To .....

From .....

Received by: Date.....

– shakte is bronze –

– no cover for 12½ –

call Luisa and

[redacted]

Show No

Work done by: .....

Completed:

Inspected by:

Shipped:

Wilcox Crittenden
filed invol.
of Bankruptcy
no trustee

Replied to that
no payable
Oct 1st on

1 Red Sail

BHC 15
@1.50 net

1

White Hall

James Moffatt

Pres Com Products
$375,000 Mayola

Chairman of BD
Durkee Co.

E Hampton
Tony Bidwell Duke
Boys Harbor Club

contribution

12 1/2 - $950 -
contribution
Send as less ck

55 ea. fct.

cash in advance

mobbals son in law
Gahagan Dredging Co.
1/2 million in business
$150,000 / pay off
used Durkee Co.

resigned as officer
directors Dec 24th

7'11 Sailing
Bob Brainninger

Order
16 - 20

38 45
38 45
76
90
166

170 Rigid Vinyl
Angle 1 x 1"
~~Legs~~ per our
discussion
Feb 18th
including
die at approx $10

Good revers
Parliament
Amer 20 -
Throttle
on handle
twist
or foot
big rudder
turn in own
length
Palmer
16 at Pt Wash
25 hp. Universal
Tow 45
4

15-18 people
60 hp. big map

First on 16' Carr

Cost Summary Page

Model

Customer

Major variations

Total Hrs

Accountable to

Extras

Boat Itself

Direct Total Labor

Total Materials other than APC

Boat:

Extras:

APC Chgs

Boat

Extras

Total Cost

Net Return @ Dealer Dis

Dif.

$ [illegible] net to [illegible]

Cover Spray H + Ext at house

Remove name Lady, Bus

[illegible] told to clean & fix floor boat.

Gifford D. Warner

SO 7-8806

Storage & laundry

$600 immediately by May 1st

Bootton ~~End~~ Royal Blue

Windshield coming

20" on P Nicho between box & Ped.

Call Huntzre 600

work [illegible]

V6 PY

26.64 with power 399.60

Wilcox Crittenden
filed invol.
of Bankruptcy
— no trustee

Replied to that
no payable
Oct 1st on

1 Red Sail

BHC 15
@1.50 net

1

White Hall

James Moffatt

Pres Com Products
$375,000 Mayola

Chairman of Bd
Durkee Co.

E Hampton
Tony Bridge Duke
Boys Harbor Club

contribution
12 1/2 - $950 -
contribution
Send as his ck
55 ea. frt.
cash in advance

moffats son in law
Galagan Dredging Co.
1/2 million in business
$150,000 / pay off
used Durkee Co.

resigned as office &
directors Dec 24th

MEMO:– ☐ **REQUISITION:–** ☐

To .....

From .....

Received by: Date.....

– shakte is bronze –

– no cover for 12½ –

call Luisa and

[redacted]

Show No

Work done by: .....

Completed:

Inspected by:

Shipped:

JAN	FEB	MAR -1966- APR	MAY	JUNE
S M T W T F S	S M T W T F S	S M T W T F S	S M T W T F S	S M T W T F S
1 / 2 3 4 5 6 7 8 / 9 10 11 12 13 14 15 / 16 17 18 19 20 21 22 / 23 24 25 26 27 28 29 / 30 31	1 2 3 4 5 / 6 7 8 9 10 11 12 / 13 14 15 16 17 18 19 / 20 21 22 23 24 25 26 / 27 28	1 2 3 4 5 / 6 7 8 9 10 11 12 / 13 14 15 16 17 18 19 / 20 21 22 23 24 25 26 / 27 28 29 30 31	1 2 3 4 5 6 7 / 8 9 10 11 12 13 14 / 15 16 17 18 19 20 21 / 22 23 24 25 26 27 28 / 29 30 31	1 2 3 4 / 5 6 7 8 9 10 11 / 12 13 14 15 16 17 18 / 19 20 21 22 23 24 25 / 26 27 28 29 30
JULY	**AUG**	**SEP**	**OCT**	**NOV**	**DEC**
S M T W T F S	S M T W T F S	S M T W T F S	S M T W T F S	S M T W T F S	S M T W T F S
1 2 / 3 4 5 6 7 8 9 / 10 11 12 13 14 15 16 / 17 18 19 20 21 22 23 / 24 25 26 27 28 29 30 / 31	1 2 3 4 5 6 / 7 8 9 10 11 12 13 / 14 15 16 17 18 19 20 / 21 22 23 24 25 26 27 / 28 29 30 31	1 2 3 / 4 5 6 7 8 9 10 / 11 12 13 14 15 16 17 / 18 19 20 21 22 23 24 / 25 26 27 28 29 30	1 / 2 3 4 5 6 7 8 / 9 10 11 12 13 14 15 / 16 17 18 19 20 21 22 / 23 24 25 26 27 28 29 / 30 31	1 2 3 4 5 / 6 7 8 9 10 11 12 / 13 14 15 16 17 18 19 / 20 21 22 23 24 25 26 / 27 28 29 30	1 2 3 / 4 5 6 7 8 9 10 / 11 12 13 14 15 16 17 / 18 19 20 21 22 23 24 / 25 26 27 28 29 30 31

LAST MONTH

1966 February 1966

S	M	T	W	T	F	S
		1	2	3	4	5
6	7	8	9	10	11	12
13	14	15	16	17	18	19
20	21	22	23	24	25	26
27	28					

1966 MARCH 1966

S	M	T	W	T	F	S
		1	2	3	4	5
6	7	8	9	10	11	12
13	14	15	16	17	18	19
20	21	22	23	24	25	26
27	28	29	30	31		

NEXT MONTH

1966 April 1966

S	M	T	W	T	F	S
					1	2
3	4	5	6	7	8	9
10	11	12	13	14	15	16
17	18	19	20	21	22	23
24	25	26	27	28	29	30

TUESDAY 29 MARCH

ENGAGEMENTS	MEMORANDA
8:00	
8:30	
9:00	
9:30	
10:00	
10:30	
11:00	
11:30	
12:00	
12:30	
1:00	
1:30	
2:00	
2:30	
3:00	
3:30	
4:00	
4:30	
5:00	
5:30	3/29/66

3 or 4 years 9' [illegible]

Stud - staples - [illegible] [illegible] bill wanted probably

21500

Labor

1100	10,250 ~~11,000~~
7700	4500
4500	6750
6750	22250
	21500
	750

Labor	10,250	
APC	4500	11250
Mat	6750	
	21,500	11

50

45
24
180
90
10.80

155
78
77

7.75
155
6.20
4
24

7.75
32
1550
2325
24800

MEMO:– ☐ **REQUISITION:–** ☐

To .....

From .....

Received by: Cramdall Date .....

Bronze Struts	64.30	150.00
Bolts etc	5.95	6.00
Rudders.	80.84	200.
Collar.		6.20
Freight	2.40	3.00
Rudder Parts	24.15	24.15
English Marine B.S. Bearing	4.11	4.11
Misc. Washers	4.27	4.50
70½ hrs.	186.02	
		397.96

FC Tabe

Work done by: .....

Completed:

Inspected by: Comes + Helper 60 hrs.

Shipped: Direct Labor $136.80

2.45
2.10
2) 4.55 | 2.28

2.28
60
136.80

MEMO:– ☐ **REQUISITION:–** ☐

To .....

From .....

Received by: Date.....

Hall, White- 6250

Engine Stringers
normal

Deck- Frd + Side 1'

Cockpit Sole

Work done by: .....

Completed:

Inspected by:

Shipped:

MAIL ADDRESS
P. O. BOX 716
NEW BEDFORD, MASS.

TELEPHONE
996-8591

FAIRHAVEN MARINE, INC.
MARINE REPAIRS, STORAGE & SALES

WILLIAM H. POTTER
PRESIDENT & TREASURER

50 FORT STREET
FAIRHAVEN, MASS.

Microsoft Access - [frmLicensee : Form]

File Edit View Insert Format Records Tools Window Help

Type a question for help

LASTNAME: Paris

FIRSTNAME: Richard

MI: P

BIRTHDATE:

EYEGLASSES: No

Works for: 128 Shoreline Cruises, Inc.

Find Licensee

Type of License: MASTER

TONS: 1000

licensenumber: 132

ISSUE_NR: 17

ORIG_DATE: 07/29/86

ENDORSMNTS:

NOTES: Passed renewal exam on 4-27-96 with grade of 85%.tpw

Record: 1746 of 1877

Form View

NUM

Start | Inbox - Microsoft ... | Data Folder | PV Program 2005 ... | PV Application Menu | frmLicensee : F... | Document1 - Micr... | « 11:39 AM

40' II

40#6

			Hrs	$
10	Fit & Install Aluminum ⟨ & after Clamps		28 1/4	9149
11	Fit & Install Breast Hook		4 1/2	1039
12	Fit & Install Transom Shelf		11 1/2	2540
20	Make & Install main Bulkhead		7 1/4	1444
30	Make & Install Engine Stringers & Related members (Include Water Tank)	does this include KPC	19 1/4	3878
80	Make & Install after Cockpit Seat Beams & Sole	*	18	3666
290	Aft Cabin Roof Fairings & Reinforcements		3	735
300	Aft Cabin Bulkhead		16	3479
320	Fit & Install After Cabin Roof		9	2205
			116 3/4	$ 28135

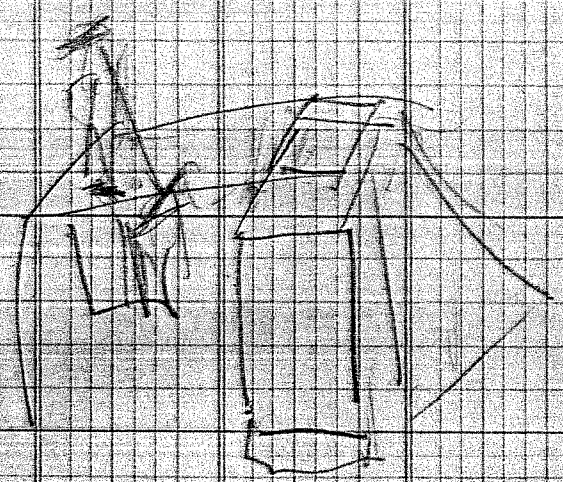

Estimate

$1,000.00

182
40
222

1724
836
888
+222
1110
53
333
666
6993

7. Whalen
40 city Notes
Jan 1966

380
25

19
20
380
18
20

840 + 6 F
13
4' frame 9.25 8.05
6 frame 9.65
Ray
half fit

36
2
72

2 3/4 x 5/8

38

630

528
52
26
606

18770
9385
28155

550
4
220

145
6
870

7672

13.
12.
14.

2.00 fut

19
16
114
19
304
275
29

5381
1647
7028
our orig mat. 702
351
8081
their mat 3800
" motor 2800
6600
+ 15% 990
7590
labor 7672
15262
4350
19612
1961
981
22554

1241
292
1551
2099
38
28

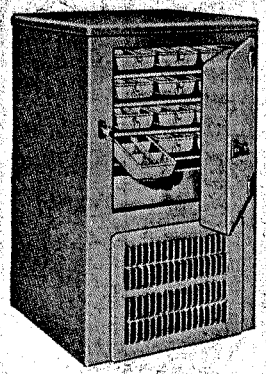

ICE CUBERS *(Manual)*
MODELS 592, 601 and 456
Remote or Self-contained
Capacity of 1,300 cubes per day

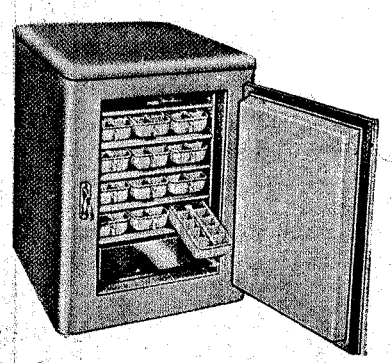

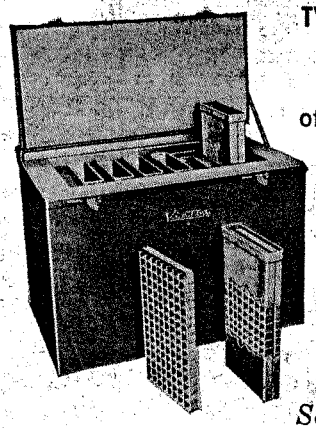

TYPE V-150 BULK ICE MAKER
(Manual)
Five sizes with capacities
of 150 to 2,000 lbs. of pure
ice per day in blocks

FLAKE ICE MAKER *(Automatic)*
Capacity of 500 lbs. of cracked
or crushed ice per day

Send for 100 page illustrated catalog

BAILEY DISTRIBUTORS, INC.

Affiliated Companies

BAILEY REFRIGERATION CO., INC.
BAILEY CARPENTER AND INSULATION CO., INC.

Offices and Warehouses

BROOKLYN, N. Y. 11231 • 74 Sullivan Street • (212) UL 5-3958
JERSEY CITY, N. J. 07305 • 22 Old Bergen Rd. • (201) 332-3440
BALTIMORE, MD. 21231 • 419 S. Caroline Street • (301) EA 7-9090
WASHINGTON, D. C. 20006 • 1629 K Street • (202) 296-8217
NEW ORLEANS, LA. 70016 • 427 Esplanade Ave. • (504) WH 3-2461

our fishing industry which is so important as a source of foods."

The new department will be based at Sarasota, Fla., and staffed by personnel experienced in the development and manufacture of electronic equipment to increase the harvest of seafoods. Mr. **Brown** said sea technology will be headed by Dr. **Glenn E. Tisdale,** who has had 15 years' experience in associated electronics research and development.

Mr. **Brown** said sea technology is part of an ambitious ocean engineering program being carried out by Westinghouse to meet the challenges of the national oceanographic program. He said the company's underseas division is already a major government supplier in the field of underseas weaponry and search and detection equipment.

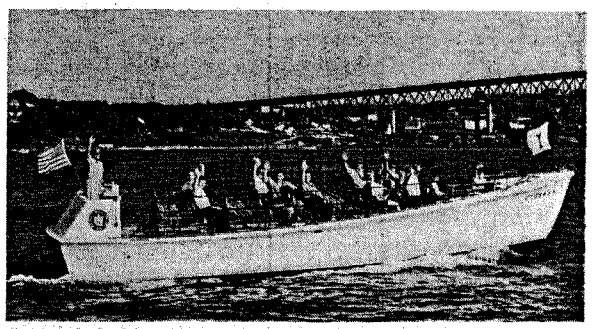

BOATING ON THE THAMES—U.S. STYLE: The Double Dolphin, a sightseeing launch operated by Whaling City Dredge & Dock Corporation of Groton, Conn., cruises along the Thames River on a "See Submarines by Boat" tour. Her fiberglass Dyercraft 40 hull was supplied by The Anchorage, Inc., Warren, R. I. This 34-year-old firm has been building small craft of fiberglass reinforced plastic since 1946. The Double Dolphin, with seating capacity for 49 people, is the largest of three boats operated by Whaling City. She is powered by a 100-hp diesel engine providing a speed of about 12 knots per hour at 1,800 rpm. Her hull design gives the excellent stability so necessary to the comfort of her passengers.

THE ANCHORAGE, INC.
57 MILLER STREET
WARREN, RHODE ISLAND 02885

Whaling City Dredge & Dock Corp.

Buell Street

Groton, Connecticut

MEMO:– ☐ **REQUISITION:–** ☐

To .....

From .....

Received by: Date.....

Sharp: Stability Test
Wentworth
Hull Inspector

40'
not over 60

Prov. Office
Marine Insp.
Prov. Office
Hull
Fletcher

What other drawings

Sections
Lines

Gustafson
Chilletti
Grimmel

No of people

$0 or 50 Very much int.

every 30" lengths
every 18" athwart
David Bourne - N. Architect Electric Boat
Tankage - Flotation

Design
Road Pulaski
into water

Work done by:

Completed: River Use

Inspected by:

Shipped: New London Harbor & Thames RR
RR Bridge CG 323 June 1 1961

Design green 8 1/2 x 11 1/4 not over 65.
C Rules & Regs for Small Pas Vessels

B&W Lathrop

DIESEL ENGINE

MODEL D-110-V

Type LER-V and LEL-V

Direct, 1.5/1, 2/1,

2.5/1 and 3/1

HYDRAULIC REV. GEAR

A Motor Mount Centers
For 1/2" Lag Screws

B Motor Mount Centers
For 1/2" Lag Screws

C Cooling Water Inlet
1" - 11 1/2 N. P. T.

D Cooling Water Outlet
1" - 11 1/2 N. P. T.

E Exhaust Connection
2 1/2 - 8 N. P. T.

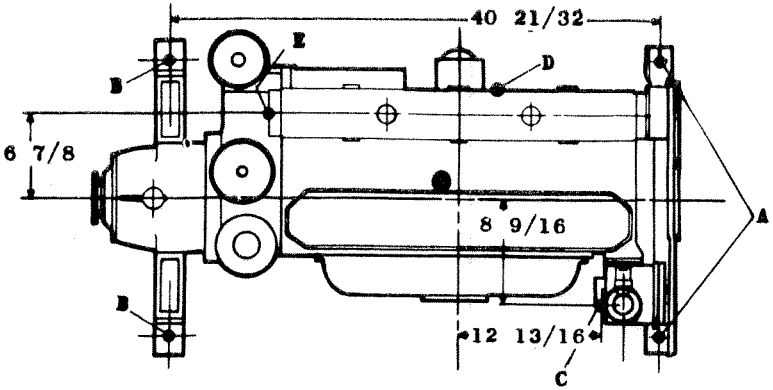

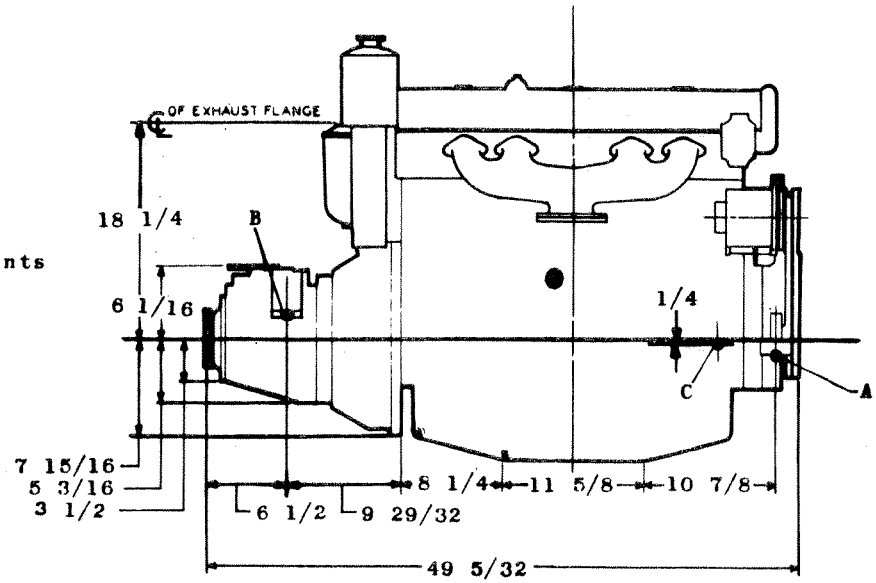

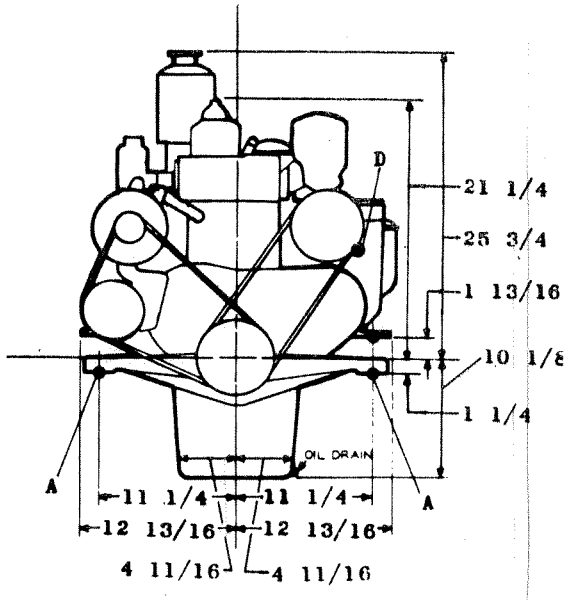

DRAWING J

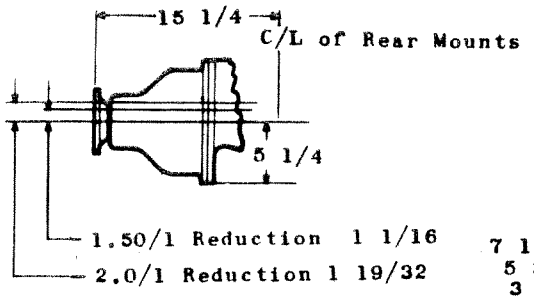

DRAWING K

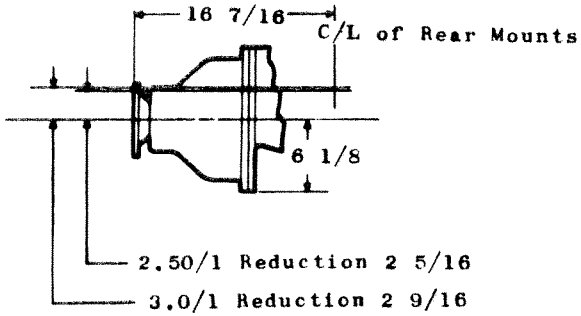

HYDRAULIC DIRECT DRIVE

110 B.H.P. at 2800

SCALE 3/4" = 1'

LATHROP MARINE ENGINES
NOW
MANUFACTURED — SOLD — SERVICED
BY
GRUMMAN ALLIED INDUSTRIES, INC.
ATHENS, NEW YORK — GARDEN CITY, N. Y.

BURMEISTER & WAIN AMERICAN CORPORATION — LATHROP ENGINE DIVISION, MYSTIC CONN. U S A

All Rights Reserved

Sheet DI-40-45

Wheeling City Dredge Co

MEMO:– ☐ **REQUISITION:–** ☐

To C.B. Lange Co

From Extras

Received by: Date

40' Hull - 40' #7

Loading 35 hrs. $64.10 D.L. = $167.30

Bow Clamp Moulding $49.00

after Hatch $12.38 42.00

Drafting $131.25 $150.95

409.25

(Cradle ~~474 hrs ($88.98)~~)

~~[illegible]~~ $300.00 if wanted.

~~[illegible]~~

Work done by:

Completed:

Inspected by:

Shipped:

Price quoted one $22,875, two $21,830

Subtract anchor 25# Sea Claw	10.
anchor warp 150' 5/8 nylon	38.
two 50' nylon tie lines	18.
sink (20) w/ water tank (30) + pump (5)	55.
Jabsco 1¼" off eng pump (90) (zise PAR 4615 ~~4290~~ ~~electric~~ Sea Gulp + 4290 Stirrup PAR	
simpler head 80 hrs inst of 160	440.
" steering station + aft blkhd. cut dk + blkd 4 hrs, install (trim 8 mt wheel 4 panel 2 seat 2 pt 4 24 instead 40	99.
	660

Increase life preservers from 40 to 50 Adults + 10 C	100
" if we to deliver to Groton including	200
wiring for sound system	50
deck cleats 8 - 12" Fig 409 Galv. (@ 6.50 52.00) instead of 33. allowed	19.
railing - allowed 370 + labor 220 590 ought to be ample	—
[illegible]	20

Tues

P.O. - Socony Tender 1 Blue
April 1st 1 ?

THE FLAGG INDUSTRIAL SUPPLY CO.
2331 WHITNEY AVENUE, HAMDEN 18, CONN.
288-2573

1/25/66

The Cambridge Inc

Please sign one copy and return to us if found acceptable —

[redacted]

Mr. Sharp
Believes seating was 49
We figure 48 - plus operator
1 deckhand optional
~~without seat~~

Said CG at New London will
determine sailing screening
which has been discussed with
them in regard to D. Dolphin experience

Final finishing to be at
N.L. To include ballast
sound system
wiring, possible roofette
48" flag poles wanted #49 light OK

Lettering Nos. 24" from bow
5 1/2" below guard to top of letters
5" high - 3 1/2" wide C O 1" thick
Stern Double Dolphin was 6"
to top of first word crowned
7 1/2" letter 6" wide 1 3/8 thick
but make SEA HORSE straight
on single line