Tillamook Bay

Tides

Three (3) pages total including this cover

Tides:Tillamook Bay, Barview

based on Crescent City, California (NOAA)
45° 34 N 123° 57 W

Friday, June 13, 2003

Average Tides	
Mean Range:	5.7 ft
MHHW:	7.5 ft
Mean Tide:	3.9 ft

Daily Highs & Lows		
6:32a	-1.7 ft	Low
12:57p	6.0 ft	High
6:06p	2.3 ft	Low
11:55p	8.8 ft	High

(PDT)	Tide
12:00a	8.3 ft
12:30a	7.8 ft
1:00a	7.2 ft
1:30a	6.3 ft
2:00a	5.3 ft
2:30a	4.2 ft
3:00a	3.1 ft
3:30a	2.0 ft
4:00a	1.0 ft
4:30a	0.1 ft
5:00a	-0.7 ft
5:30a	-1.3 ft
6:00a	-1.6 ft
6:30a	-1.7 ft
7:00a	-1.6 ft
7:30a	-1.3 ft
8:00a	-0.7 ft
8:30a	0.0 ft
9:00a	0.9 ft
9:30a	1.9 ft
10:00a	2.8 ft
10:30a	3.7 ft
11:00a	4.5 ft
11:30a	5.2 ft
12:00p	5.7 ft
12:30p	5.9 ft
1:00p	6.0 ft
1:30p	5.9 ft
2:00p	5.6 ft
2:30p	5.2 ft
3:00p	4.7 ft
3:30p	4.2 ft
4:00p	3.6 ft
4:30p	3.1 ft
5:00p	2.7 ft
5:30p	2.4 ft
6:00p	2.3 ft
6:30p	2.3 ft
7:00p	2.6 ft
7:30p	3.1 ft
8:00p	3.7 ft
8:30p	4.5 ft
9:00p	5.3 ft
9:30p	6.2 ft
10:00p	7.0 ft
10:30p	7.8 ft
11:00p	8.3 ft
11:30p	8.7 ft
12:00a	8.8 ft

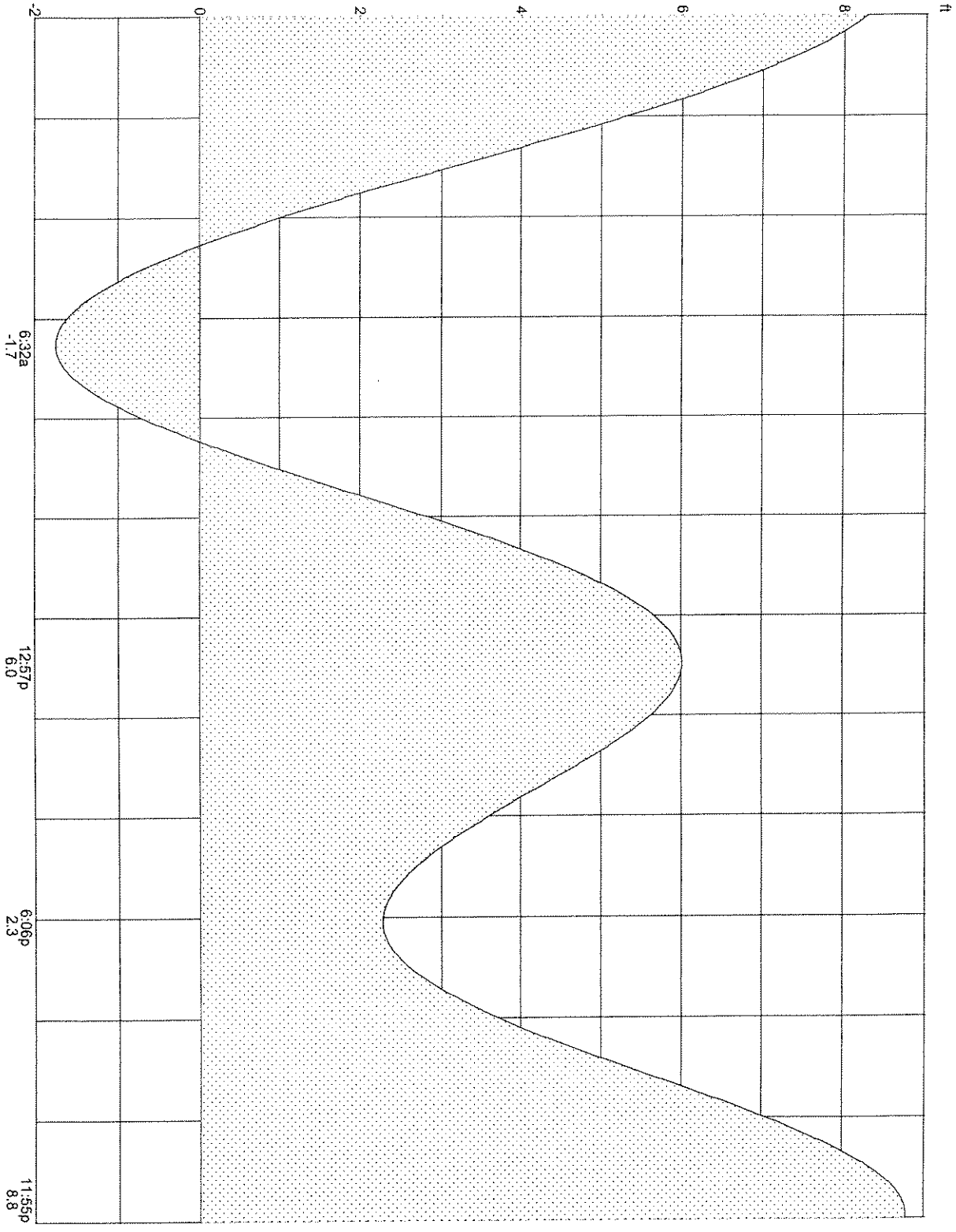

Printed by Tides & Currents for Windows™ by Nobeltec Corporation. (503) 579-1414 • www.tides.com

Tides:Tillamook Bay, Barview

based on Crescent City, California (NOAA)
45° 34 N 123° 57 W

Saturday, June 14, 2003

Average Tides	
Mean Range:	5.7 ft
MHHW:	7.5 ft
Mean Tide:	3.9 ft

Daily Highs & Lows		
7:21a	-2.1 ft	Low
1:51p	6.2 ft	High
6:58p	2.5 ft	Low

(PDT)	Tide
12:00a	8.8 ft
12:30a	8.6 ft
1:00a	8.2 ft
1:30a	7.7 ft
2:00a	6.9 ft
2:30a	5.9 ft
3:00a	4.9 ft
3:30a	3.7 ft
4:00a	2.6 ft
4:30a	1.5 ft
5:00a	0.4 ft
5:30a	-0.5 ft
6:00a	-1.2 ft
6:30a	-1.8 ft
7:00a	-2.0 ft
7:30a	-2.1 ft
8:00a	-1.9 ft
8:30a	-1.4 ft
9:00a	-0.7 ft
9:30a	0.1 ft
10:00a	1.1 ft
10:30a	2.1 ft
11:00a	3.1 ft
11:30a	4.0 ft
12:00p	4.8 ft
12:30p	5.4 ft
1:00p	5.9 ft
1:30p	6.1 ft
2:00p	6.2 ft
2:30p	6.0 ft
3:00p	5.7 ft
3:30p	5.3 ft
4:00p	4.8 ft
4:30p	4.2 ft
5:00p	3.7 ft
5:30p	3.2 ft
6:00p	2.8 ft
6:30p	2.5 ft
7:00p	2.5 ft
7:30p	2.6 ft
8:00p	2.9 ft
8:30p	3.4 ft
9:00p	4.1 ft
9:30p	4.9 ft
10:00p	5.7 ft
10:30p	6.6 ft
11:00p	7.4 ft
11:30p	8.0 ft
12:00a	8.5 ft

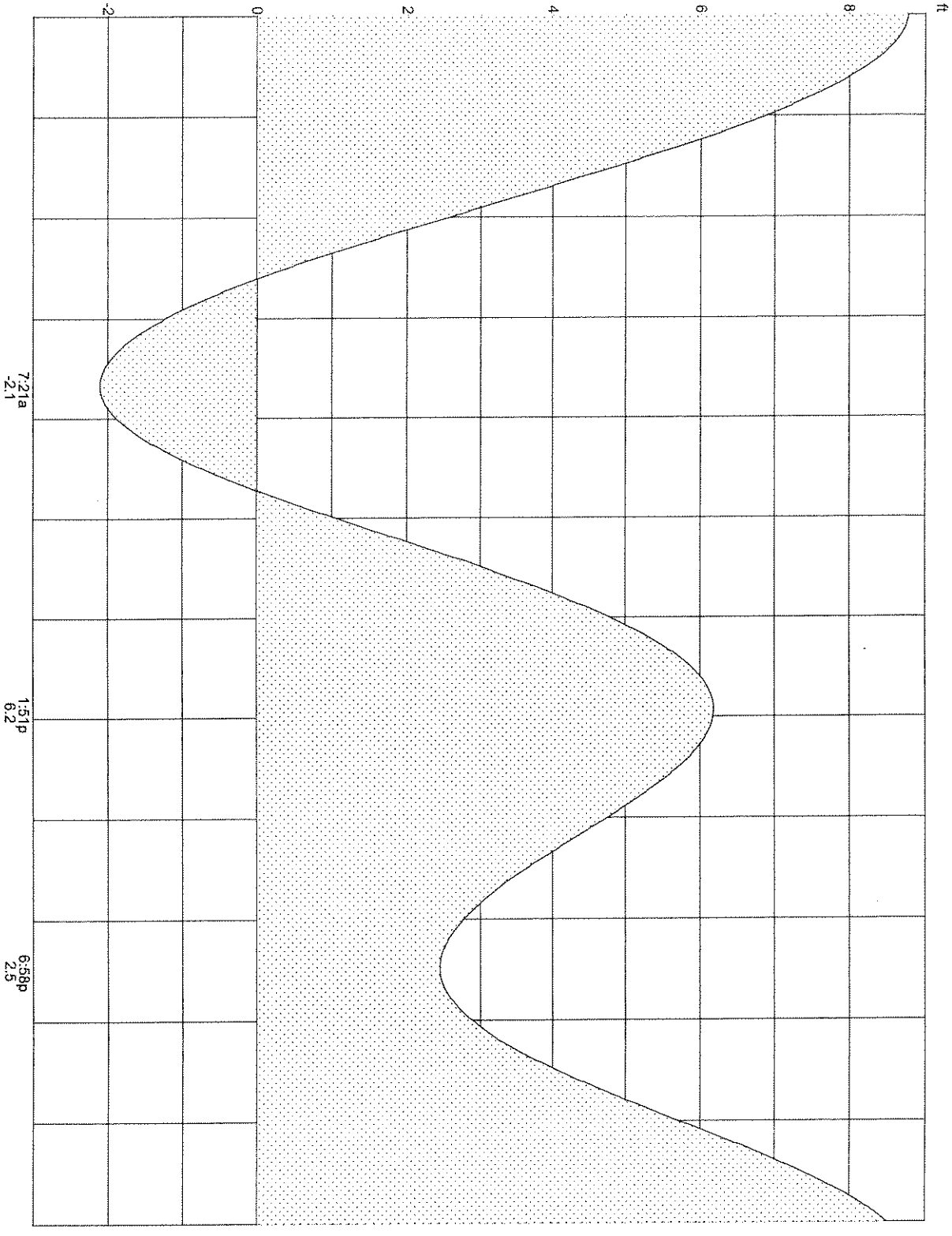

Printed by Tides & Currents for Windows™ by Nobeltec Corporation. (503) 579-1414 • www.tides.com