Engineering Release Notice (ERN)	Location	Change description A-Added D-Deleted W-Was	Document release status RELEASED
			Date / Modification count

DRAWN	NAME	VICTOR GAMBOA	DATE	2006-05-17
CHECKED	NAME	W. JAIMES	DATE	2006-05-17
APPROVED	NAME	SCHELLER HELMUT	DATE	2006-05-17

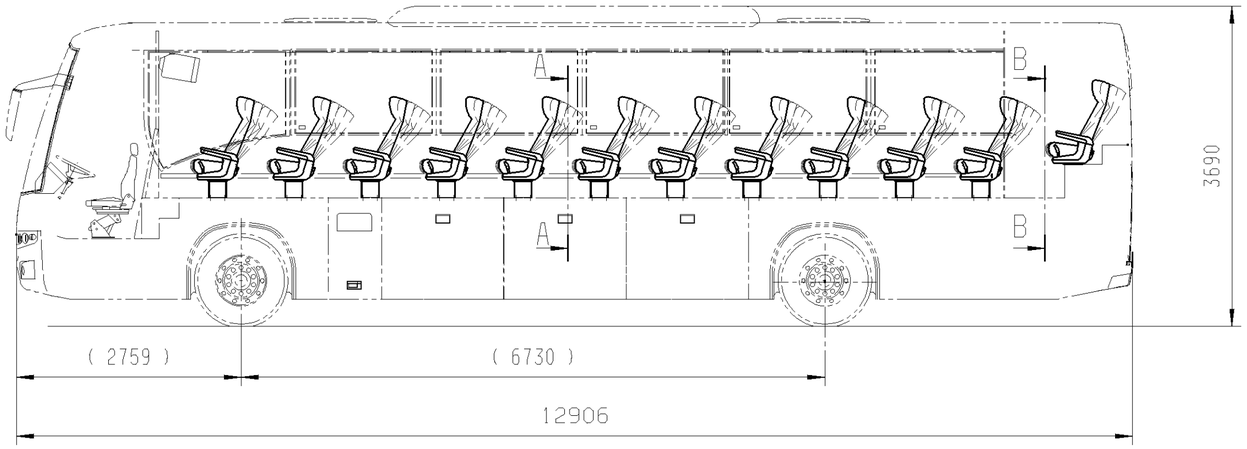

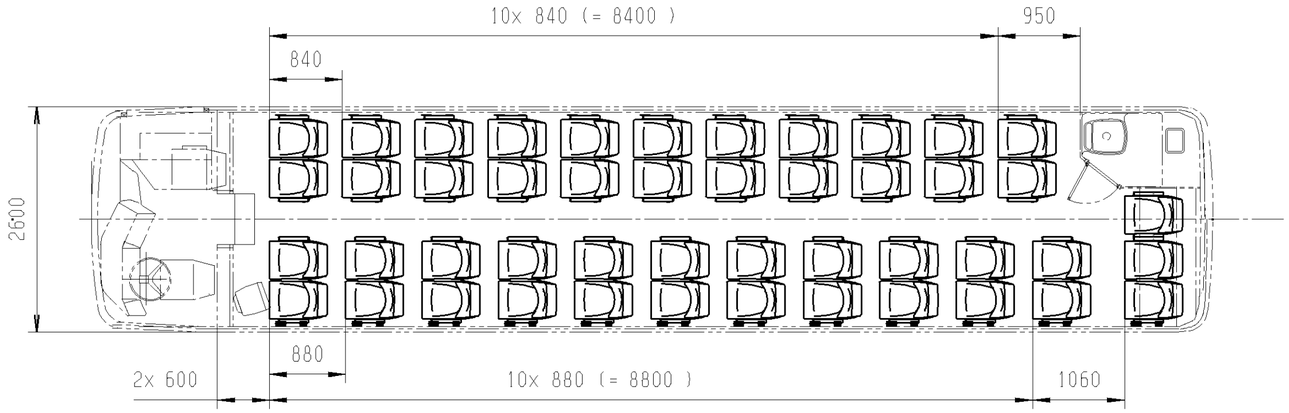

S	SAFETY BELT ROLLER TYPE 2 POINTS, ALL SEATS.
S	VELCRO
S	STORAGE NET

KIT No.	BRAND/ MODEL	TEXTILE	FOLD. MID. ARMREST	SIDE ARMREST AISLE & WINDOW	FOOT REST
20955345	AMAYA 8000	OCEANO AZUL	YES	YES	YES

A-A (1:20)

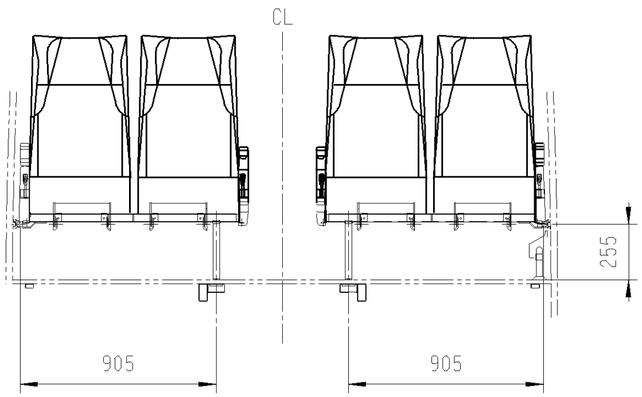

B-B (1:20)

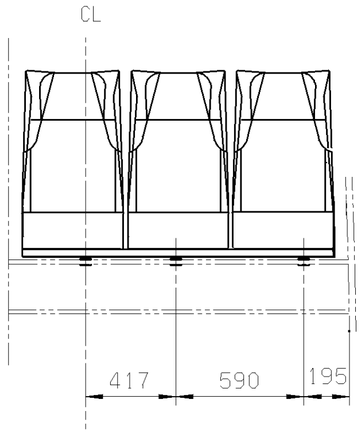

CAD PREFIX: V5

SCALE: 1:50

FOR FURTHER INFORMATION SEE DRAWING 70363885

TOLERANCES UNLESS OTHERWISE STATED: SS- ISO 2768-v

MAIN INFORMATION OF PART/SEE PART VERSION REPORT

SYMBOLS, DESIGNATIONS AND GENERAL DRAWING METHODS

The copying, distribution and utilization of this document as well as the communication of its contents to others without expressed authorization is prohibited. Offenders will be held liable for payment of damages. All rights reserved in the event of the grant of a patent, utility model or ornamental design registration.

VOLVO
Volvo Bus Corporation

Document title
PASSENGER SEAT KIT
47 9700 4X2

Document type

Owner domain:Document prefix

Document No	Issue index	Sheet No
20955344	01	