Note

This pamphlet paraphrases the provisions in 23 U.S.C. 127 and 23 CFR 658 for the sake of clarity. In case of a dispute, the statue and regulations take precedence.

Previous editions of this pamphlet, entitled *Bridge Gross Weight Formula* (April 1984) and *Bridge Formula Weights* (January 1994), remain valid. Neither the Bridge Formula nor any resulting maximum gross weight values (table entries) has been changed.

U.S. Department of Transportation
Federal Highway Administration

Office of Freight Management and Operations
Phone: 202-366-9210
Fax: 202-366-3302
Web site: http://www.ops.fhwa.dot.gov/freight

August 2006

FHWA-HOP-06-105

Bridge Formula Weights

August 2006

U.S. Department of Transportation
Federal Highway Administration

Bridge Formula Weights

With a few exceptions noted in this pamphlet, the Bridge Formula establishes the maximum weight any set of axles on a motor vehicle may carry on the Interstate highway system. This pamphlet describes the Bridge Formula, why it was established, and how it is used.

What Is It?

Congress enacted the Bridge Formula in 1975 to limit the weight-to-length ratio of a vehicle crossing a bridge. This is accomplished either by spreading weight over additional axles or by increasing the distance between axles.

Compliance with Bridge Formula weight limits is determined by using the following formula:

$$W = 500 \left[\frac{LN}{N-1} + 12N + 36 \right]$$

W = the overall gross weight on any group of two or more consecutive axles to the nearest 500 pounds.

L = the distance in feet between the outer axles of any group of two or more consecutive axles.

N = the number of axles in the group under consideration.

In addition to Bridge Formula weight limits, Federal law states that single axles are limited to 20,000 pounds, and axles closer than 96 inches apart (tandem axles) are limited to 34,000 pounds. Gross vehicle weight is limited to 80,000 pounds (23 U.S.C. 127).

Is the Formula Necessary?

Bridges on the Interstate System highways are designed to support a wide variety of vehicles and their expected loads. As trucks grew heavier in the 1950s and 1960s, something had to

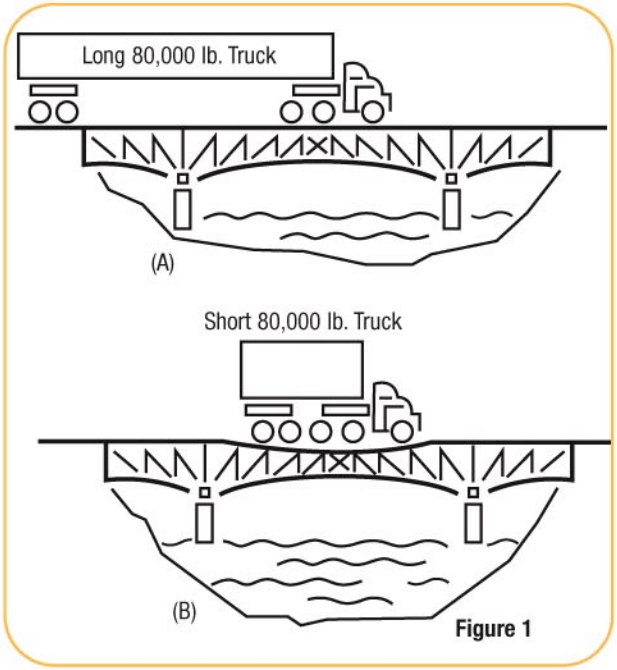

Figure 1

be done to protect bridges. The solution was to link allowable weights to the number and spacing of axles.

Axle spacing is as important as axle weight in designing bridges. In Figure 1A, the stress on bridge members as a longer truck rolls across is much less than that caused by a short vehicle as shown in Figure 1B, even though both trucks have the same total weight and individual axle weights. The weight of the longer vehicle is spread out, while the weight of the shorter vehicle is concentrated on a smaller area.

How Is the Formula Used?

The weight on various axle configurations must be checked to determine compliance with the Bridge Formula. Three definitions are needed to use the Bridge Formula correctly.

Gross Weight—the weight of a vehicle or vehicle combination and any load thereon. The Federal gross weight limit on the Interstate System is 80,000 pounds unless the Bridge Formula dictates a lower weight limit.

Single-Axle Weight—The total weight on one or more axles whose centers are spaced not more 40 inches apart. The Federal single-axle weight limit on the Interstate System is 20,000 pounds.

Tandem-Axle Weight—The total weight on two or more consecutive axles whose centers are spaced more than 40 inches apart but not more than 96 inches apart. The Federal tandem-axle weight limit on the Interstate System is 34,000 pounds.

Interstate System weight limits in some States may be higher than the figures noted above due to "grandfather" rights. When the Interstate System axle and gross weight limits were first adopted in 1956, and amended in 1975, States were allowed to keep or "grandfather" weight limits that were higher.

Bridge Formula calculations yield a series of weights (Bridge Table, pages 5-6). It is important to note that the single-axle weight limit replaces the Bridge Formula weight limit on axles not more than 40 inches apart, and the tandem-axle weight limit replaces the Bridge Formula weight limit for axles over 40 but not more than 96 inches apart. At 97 inches apart, for example, two axles may carry 38,000 pounds (Figure 2A), and three axles may carry 42,000 pounds, as shown in Figure 2B.

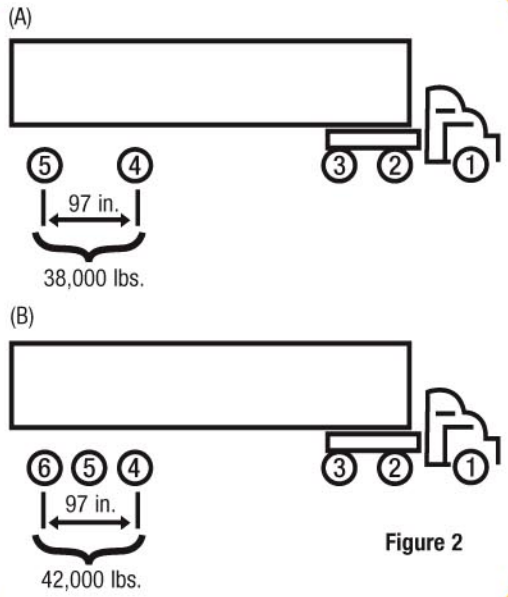

Figure 2

Federal law states that any two or more consecutive axles may not exceed the weight computed by the Bridge Formula even though single axles, tandem axles, and gross weight are within legal limits. As a result, the axle group that includes the entire truck—sometimes called the "outer bridge" group—must comply with the Bridge Formula. However, interior combinations of axles, such as the "tractor bridge" (axles 1, 2, and 3) and "trailer bridge" (axles 2, 3, 4, and 5), must also comply with weights computed by the Bridge Formula (Figure 3).

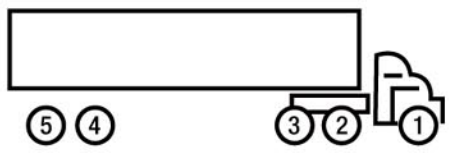

Figure 3

Figure 3 shows the most common vehicle checked for compliance with weight limit requirements. Although the Bridge Formula applies to each combination of two or more axles, experience shows that axle combinations 1 through 3, 1 through 5, and 2 through 5 are critical and must be checked. If these combinations are found to be satisfactory, then all of the others on this type of vehicle normally will be satisfactory.

The vehicle with weights and axle dimensions shown in Figure 4 is used to illustrate a Bridge Formula check.

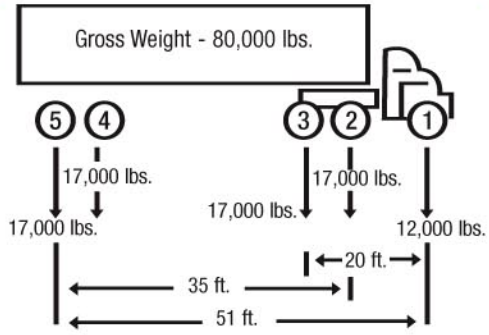

Figure 4

Permissible Gross Loads for Vehicles in Regular Operation[1]

Based on weight formula $W = 500\left[\frac{LN}{N-1} + 12N + 36\right]$

Distance in feet (L) between the extremes of any group of 2 or more consecutive axles

Maximum load in pounds carried on any group of 2 or more consecutive axles[2]

L	N= 2 AXLES	3 AXLES	4 AXLES	5 AXLES	6 AXLES	7 AXLES	8 AXLES	9 AXLES
Tandem Axle Weight (see pages 3 & 4) 4	34,000	.....	.....	.....	.....	.....	.....	.....
5	34,000	.....	.....	.....	.....	.....	.....	.....
6	34,000	.....	.....	.....	.....	.....	.....	.....
7	34,000	.....	.....	.....	.....	.....	.....	.....
8	34,000	34,000	.....	.....	.....	.....	.....	.....
More than 8/less than 9	38,000	42,000	.....	.....	.....	.....	.....	.....
9	39,000	42,500	.....	.....	.....	.....	.....	.....
10	40,000	43,500	.....	.....	.....	.....	.....	.....
11	.....	44,000	.....	.....	.....	.....	.....	.....
12	.....	45,000	50,000	.....	.....	.....	.....	.....
13	.....	45,500	50,500	.....	.....	.....	.....	.....
14	.....	46,500	51,500	.....	.....	.....	.....	.....
15	.....	47,000	52,000	.....	.....	.....	.....	.....
16	.....	48,000*	52,500	58,000	.....	.....	.....	.....
17	.....	48,500	53,500	58,500	.....	.....	.....	.....
18	.....	49,500	54,000	59,000	.....	.....	.....	.....
19 Example (see page 7)	.....	50,000	54,500	60,000	.....	.....	.....	.....
20	.....	51,000	55,500	60,500	66,000	.....	.....	.....
21	.....	51,500	56,000	61,000	66,500	.....	.....	.....
22	.....	52,500	56,500	61,500	67,000	.....	.....	.....
23	.....	53,000	57,500	62,500	68,000	.....	.....	.....
24	.....	54,000	58,000	63,000	68,500	74,000	.....	.....
25	.....	54,500	58,500	63,500	69,000	74,500	.....	.....
26	.....	55,500	59,500	64,000	69,500	75,000	.....	.....
27	.....	56,000	60,000	65,000	70,000	75,500	.....	.....
28	.....	57,000	60,500	65,500	71,000	76,500	82,000	.....
29	.....	57,500	61,500	66,000	71,500	77,000	82,500	.....
30	.....	58,500	62,000	66,500	72,000	77,500	83,000	.....
31	.....	59,000	62,500	67,500	72,500	78,000	83,500	.....
32	.....	60,000	63,500	68,000	73,000	78,500	84,500	90,000
33	.....	.....	64,000	68,500	74,000	79,000	85,000	90,500
34	.....	.....	64,500	69,000	74,500	80,000	85,500	91,000
35	.....	.....	65,500	70,000	75,000	80,500	86,000	91,500
36	.....	Exception (see page 9)	66,000	70,500	75,500	81,000	86,500	92,000
37	.....		66,500	71,000	76,000	81,500	87,000	93,000
38	.....	.....	67,500	71,500	77,000	82,000	87,500	93,500
39	.....	.....	68,000	72,000	77,500	82,500	88,500	94,000
40	.....	.....	68,500	73,000	78,000	83,500	89,000	94,500
41	.....	.....	69,500	73,500	78,500	84,000	89,500	95,000
42	.....	.....	70,000	74,000	79,000	84,500	90,000	95,500
43	.....	.....	70,500	75,000	80,000	85,000	90,500	96,000
44	.....	.....	71,500	75,500	80,500	85,500	91,000	96,500
45	.....	.....	72,000	76,000	81,000	86,000	91,500	97,500
46	.....	.....	72,500	76,500	81,500	87,000	92,500	98,000
47	.....	.....	73,500	77,500	82,000	87,500	93,000	98,500
48	.....	.....	74,000	78,000	83,000	88,000	93,500	99,000
49	.....	.....	74,500	78,500	83,500	88,500	94,000	99,500
50	.....	.....	75,500	79,000	84,000	89,000	94,500	100,000
51	.....	.....	76,000	80,000	84,500	89,500	95,000	100,500
52	.....	.....	76,500	80,500	85,000	90,500	95,500	101,000
53	.....	.....	77,500	81,000	86,000	91,000	96,500	101,500
54	.....	.....	78,000	81,500	86,500	91,500	97,000	102,000
55	.....	.....	78,500	82,500	87,000	92,000	97,500	102,500
56	.....	Interstate Gross Weight Limit (see page 2)	79,500	83,000	87,500	92,500	98,000	103,000
57	.....		80,000	83,500	88,000	93,000	98,500	104,000
58	.....	.....	.....	84,000	89,000	94,000	99,000	104,500
59	.....	.....	.....	85,000	89,500	94,500	99,500	105,000
60	.....	.....	.....	85,500	90,000	95,000	100,500	105,500

[1]The values in this table reflect FHWA's policy of rounding down when calculated weights fall exactly halfway between 500-pound increments. Because the Bridge Formula is designed to protect highway infrastructure, FHWA determined that this conservative policy is consistent with the statutory mandate.

[2]The following loaded vehicles must not operate over H15-44 bridges; 3-S2 (5-axle tractor semitrailer with a wheelbase of less than 38 feet), 2-S1-2 (5-axle semitrailer combination with a wheelbase of less than 45 feet), 3-3 (6-axle truck trailer combination with a wheelbase less than 45 feet), and any truck with 7 or more axles. H15-44 bridges are designed for a specific vehicle load; H15 refers to a 15-ton 2-axle truck; 44 refers to the year AASHTO published the loading information. See *AASHTO Standard Specifications for Highway Bridges.*

Before checking for compliance with the Bridge Formula, a vehicle's single-axle, tandem-axle, and gross weight should be checked. Here the single axle (number 1) does not exceed 20,000 pounds, tandems 2-3 and 4-5 do not exceed 34,000 pounds each, and the gross weight does not exceed 80,000 pounds. Thus, these preliminary requirements are satisfied. The first Bridge Formula combination is checked as follows:

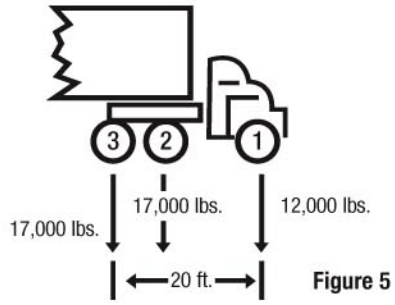

Figure 5

Check axles 1 through 3 (Figure 5)

Actual weight = 12,000 + 17,000 + 17,000 = 46,000 pounds.

N = 3 axles

L = 20 feet

$$W = 500 \left[\frac{LN}{N-1} + 12N + 36 \right]$$

$$W = 500 \left[\frac{(20 \times 3)}{(3 - 1)} + (12 \times 3) + 36 \right] = 51{,}000 \text{ lbs.}$$

Maximum weight (W) = 51,000 pounds, which is more than the actual weight of 46,000 pounds. Thus, the Bridge Formula requirement is satisfied.

Example From the Bridge Table (pages 5 & 6)
The same number (51,000 pounds) could have been obtained from the Bridge Table by reading down the left side to L = 20 and across to the right where N = 3.

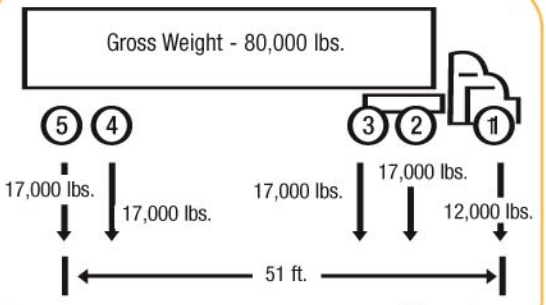

Figure 6

Now check axles 1 through 5 (Figure 6)

Actual weight = 12,000 + 17,000 + 17,000 + 17,000 + 17,000 = 80,000 pounds.

Maximum weight (W) = 80,000 pounds (Bridge Table for "L" of 51 feet and "N" of 5 axles).

Therefore, this axle spacing is satisfactory.

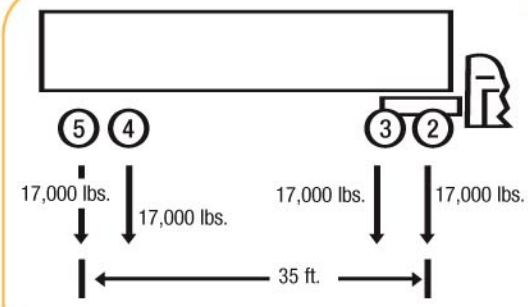

Figure 7

Now check axles 2 through 5 (Figure 7)

Actual weight = 17,000 + 17,000 + 17,000 + 17,000 = 68,000 pounds.

Maximum weight (W) = 65,500 pounds (Bridge Table for "L" of 35 feet and "N" of 4 axles).

This is a violation because the actual weight exceeds the weight allowed by the Bridge Formula. To correct the situation, some load must be removed from the vehicle or the axle spacing (35 feet) must be increased.

Exception to Formula and Bridge Table

In addition to the grandfather rights noted on page 3, Federal law (23 U.S.C. 127) includes one other exception to the Bridge Formula and the Bridge Table—two consecutive sets of tandem axles may carry 34,000 pounds each if the overall distance between the first and last axles of these tandems is 36 feet or more. For example, a five-axle tractor-semitrailer combination may carry 34,000 pounds both on the tractor tandem (axles 2 and 3) and the trailer tandem (axles 4 and 5), provided axles 2 and 5 are spaced at least 36 feet apart. Without this exception, the Bridge Formula would allow an actual weight of only 66,000 to 67,500 pounds on tandems spaced 36 to 38 feet apart.

Bridge Formula Application to Single-Unit Trucks

The procedure described above could be used to check any axle combinations, but several closely spaced axles usually produce the most critical situation.

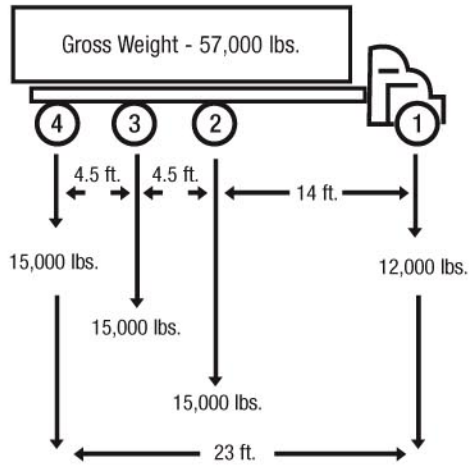

Figure 8

The truck shown in Figure 8 satisfies the single-axle weight limit (12,000 pounds are less than 20,000 pounds), the tandem-axle limit (30,000 pounds are less than 34,000 pounds) and the gross-weight limit (57,000 pounds are less than 80,000 pounds). With these restrictions satisfied, a check is done for Bridge Formula requirements, axles 1 through 4.

Actual Weight= 12,000 + 15,000 + 15,000 + 15,000 = 57,000 pounds.

Maximum weight (W) = 57,500 pounds (Bridge Table for "L" of 23 feet and "N" of 4 axles).

Since axles 1 through 4 are satisfactory, check axles 2 through 4:

Actual weight = 15,000 + 15,000 + 15,000 = 45,000 pounds.

Maximum weight (W) = 42,500 pounds (Bridge Table for "L" of 9 feet and "N" of 3 axles).

This is a violation because the actual weight exceeds the weight allowed by the Bridge Formula. The load must either be reduced, axles added, or spacing increased to comply with the Bridge Formula.

Quality Assurance Statement

The Federal Highway Administration (FHWA) provides high-quality information to serve Government, industry, and the public in a manner that promotes public understanding. Standards and policies are used to ensure and maximize the quality, objectivity, utility, and integrity of its information. FHWA periodically reviews quality issues and adjusts its programs and processes to ensure continuous quality improvement.