NATIONAL TRANSPORTATION SAFETY BOARD
Office of Research and Engineering
Materials Laboratory Division
Washington, D.C. 20594

November 7, 2008

MATERIALS LABORATORY STUDY Report No. 08-117

A. ACCIDENT

Place	:	Minneapolis, Minnesota
Date	:	August 1, 2007
Vehicle	:	I-35W Bridge
NTSB No.	:	HWY07MH024
Investigator	:	Mark Bagnard

B. TOPICS ADDRESSED

Review of documents:

1. Sverdrup Corporation steel joint detailing manual
2. Sverdrup and Parcel computation sheets showing calculations for gusset plates on the Orinoco bridge

C. DETAILS OF THE STUDY

1. SVERDRUP MANUAL

In 1989, Sverdrup Corporation produced a manual entitled Detailing of Structural Steel Joints, and Jacobs Engineering Group (hereinafter Jacobs) provided a copy of this manual to the Safety Board in August 2008. The foreword to the manual notes that it was preceded by two earlier versions, one in 1964 and one in 1969; no copies of these earlier versions of the manual have been located. In general, the manual deals with joints in truss bridges, and includes guidelines, examples and reference materials.

Jacobs reported that the 1989 manual was developed by Sverdrup in order to arrange into one document a protocol for the detailing of steel truss joints for bridges. Because many senior bridge engineers and senior detailers were about to retire and there was no current compilation of their historical knowledge, the company undertook to develop a formal written protocol going forward for the design of steel truss joints. Jacobs indicated that, prior to the 1989 manual, all the steps contained in the manual were not considered part of a regimented protocol; different engineers, applying different, though reasonable, engineering judgment, might employ additional or fewer steps than those enumerated in the 1989 manual.

The manual indicates that it was the responsibility of the detailer to prepare computations to be checked and revised as necessary, with the results used to produce the final design drawings. The manual lays out a 14-step process for the design of joints that carry tension. In general, the steps are the same for joints that carry tension and for joints that carry compression, except that net section properties (accounting for area lost to fastener holes) are used for tension joints, while gross section properties are used for compression joints. The 14 steps are summarized below:

1. Use design loads to calculate the number of fasteners required for verticals and diagonals, based on AASHTO specifications for connections.
2. Calculate the direct force carried across the joint. Since design loads for each member are determined independently as the maximum for that member, the design loads for all members at a joint will generally not be in equilibrium. If the loads are far from equilibrium, an equilibrium case should be calculated that gives the maximum direct force across the joint. If the design loads are not too far out of equilibrium, the design loads can be used directly, making the most conservative choice for each component or combination as necessary.
3. Calculate the stress ranges of the members to determine if fatigue cracking is an issue at the joint.
4. For the chord members, calculate the contribution to the cross sectional area of the side plates and cover plates to determine the number of fasteners to be used for each type of plate.
5. Calculate initial thicknesses of the splice plates and gusset plates to carry the direct force across the joint. The height of the gusset plate in this case is taken as equal to the height of the chord members. Material used for the splice plates and gusset plates should be the same as for the more highly stressed chord member. The allowable stress is reduced by 20 percent for this calculation.
6. Lay out the joint to calculate the in-plane dimensions of the gusset plates, as determined by the angles of the diagonals, any chamfers, and the approximate fastener patterns. Fastener spacing follows AASHTO specifications.
7. The full in-plane sizes of the gusset plates introduce an eccentricity in the joint. The direct force across the eccentric joint creates bending stress, and the maximum total stress (direct stress plus bending stress) on the upper and lower splice plates is checked against the allowable tension or compression stress.
8. Determine the number and type of fasteners needed to connect the chord members through the splice plates and gusset plates.
9. Compare the average stress (from the direct stress plus bending stress in step 7) across the gusset plate against the allowable tension or compression stress.
10. Evaluate the fastener patterns against the requirement to maintain net sections.
11. Check to make sure that welded cover plates for diagonals extend far enough inside gusset plate connections to fully develop the stress in the cover plate within the joint.
12. Check pull-out resistance of tension members though a combination of tension and shear around the end of the member. This check is similar to a block shear calculation.
13. Calculate the average shear stress in the gusset plates along a section between the chord members and the diagonals and vertical, using the design loads or an equilibrium load case that gives the maximum shear stress on that section. Multiply

the average shear stress by 1.5 and compare that value to the allowable shear stress, increasing the thickness of the gusset plates if necessary to meet the allowable stress level.

14. Recheck the joint to assess the possibility of fatigue cracking.

In addition to the 14 steps listed above, some additional guidance was also provided, excerpted and summarized below:

a. Gusset plates should be as small as possible.
b. Use no more than 5 to 10 percent more fasteners than required.
c. Keep fasteners as symmetrical as possible about the centerline of a member.
d. Use cover plates on diagonals the full length of the member to act as diaphragms between gusset plates. Cutouts in the cover plates might be needed to satisfy this requirement and also allow access to fasteners.
e. Check the unsupported edge distance where there is a possibility of buckling from a compression diagonal member. If the unsupported edge distance exceeds AASHTO specifications, an angle can be added to stiffen the edge.

The 1989 manual also includes design guidelines for special types of joints, such as those at the ends of trusses, middle joints between upper and lower chords, and joints for lateral, sway or portal braces.

2. ORINOCO BRIDGE

Jacobs examined their records looking for documentation from other Sverdrup & Parcel truss bridges showing computations relating to main truss gusset plates. Jacobs reported that Sverdrup & Parcel did not typically maintain records of truss joint calculations upon completion of a project, but they did locate one set of records including such computations for a bridge over the Orinoco River in Venezuela, and provided excerpts of these documents to the Safety Board in January 2008. The Orinoco bridge is a suspension bridge, but it uses a truss to support and stiffen the deck. The excerpted computation sheets that were provided date from May through July 1964, and they show calculations for some of the joints in the main trusses and floor trusses. The excerpts from the design plans that were provided are also dated 1964.

The excerpts included a complete set of computations for joint L9. The numbers of fasteners needed for the vertical and diagonals were first calculated, adhering to AASHTO specifications that connections should carry the average of the design load and the member capacity, but not less than 75 percent of the member capacity. The connections were checked both for tension using net section properties and for compression using gross section properties but a reduced allowable stress to prevent buckling. The direct stress plus bending stress in the lower splice plate was checked for both tension and compression; these stresses arise from the direct force across the chord splice coupled with the eccentricity in the joint introduced by the extent of the gusset plates. The direct force across the chord splice was assumed to be the member capacity in tension or compression. The numbers of fasteners needed for the chord members were then

calculated. The gusset plate was then checked for shear along a section between the chord members and the diagonals and vertical; the maximum average shear stress was compared directly with the allowable stress (if the average shear stress had been multiplied by 1.5, that value would also have been less than the allowable stress). The gusset plate was then checked for bending stress developed along a net section through the top row of rivets on the chord members.

The excerpts also included computation sheets for joint U17, a three-member joint where the vertical is attached to a continuous upper chord with no diagonal members. These computation sheets included some calculations to connect lateral braces to the upper chord through a gusset plate. The numbers of rivets required were calculated for each member. The gusset plate for the connection of the lateral braces was also checked for shear and bending; in the shear check, the average shear stress was multiplied by 1.5 for comparison with the allowable.

The excerpts showing the computations for joints L9 and U17 are attached as Appendix A.

Carl R. Schultheisz
Materials Research Engineer

Appendix A
Excerpts of computation sheets for the Orinoco bridge

SVERDRUP & PARCEL

JOB. 7035 Orinoco River Bridge

SHEET NO. 1 OF 7

COMPUTATIONS FOR JOINT DESIGN

DATE 7-66

BY R. Olson CHKD. R. Clark

L9 - SIDE SPAN

Criteria:
use 7/8" shop rivets or
7/8" field bolts

9.02 K/r. S.S.
18.04 K/r. D.S.

Splices: 100% of capacity of member. Outside web splice pl. to be 7/8" max.

JOINT L9

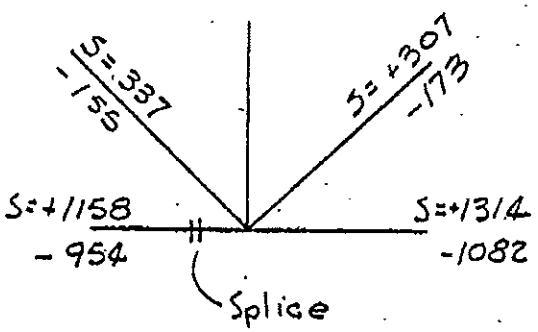

STRUT

2 - 12 [20.7 10 7/8" b.-b.

$A_G = 12.1''^2$ f = 17.52 ksi

$A_N = 8.4''^2$ f = 21.8 ksi

S = 0

		75%
C = 12.1 × 17.52 =	212K	159K
T = 8.4 × 21.8 =	183K	137K

Riv: 159 ÷ 9.02 = 17+

Connect lower flanges to gusset PL

Lower flg. = 2 × 3 × 1/2 = 3.0 $''^2$

$3.0''^2 / 12.1''^2 \times 159^K = 39.5^K$

Riv. 39.5K ÷ 9.02 = 4+

Remainder: 159K
− 39.5
119.5K

Riv. 119.5 ÷ 9.02 = 13+

LATERALS

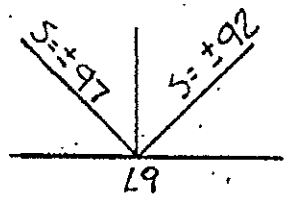

PLAN

ST 12 WF 65

A_G = 17.0 f = 14.2

A_N = 14.3 f = 26.2

SVERDRUP & PARCEL

JOB 2085 Orinoco River Bridge

COMPUTATIONS FOR Joint Design

L9 - Side Span

SHEET NO. 2 OF 7

DATE 7-64

BY R Olson CHKD. R Clark

Ten:

S: +97

T = 26.2 × 14.3 = 374 × 75% = 280

471/2 = 236

Comp:

S: -97

C = 14.2 × 17.0 = 242 × 75% = 182

339/2 = 170

Riv.: 280 ÷ 9.02 = 31 +

Gusset to Chord

$$\frac{(280 + 182) \times 24}{37.8} = 294^k$$

Riv.: 294 ÷ 9.02 = 32 +

Vertical

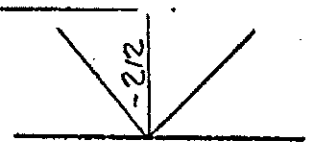

2 Pls. 11 × 1/2

1 Pl. 20 × 1/2

A_G 21.0 in² f = 13.6

A_N 17.0 f = 21.8

Ten:

S: 0

T = 21.8 × 17.0 = 371 × 75% = 278^k

Comp:

S: -212

C = 13.6 × 21.0 = 286 × 75% = 214^k

498/2 = 249^k

Riv.: 278 ÷ 9.02 = 30+

Diagonals

2 Pls 13 × 5/8

Pl 19 3/4 × 1/2

A_G = 26.1 f = 12.7

A_N = 21.1 f = 21.8

U8 - L9

Ten:

S: 337

T = 21.1 × 21.8 = 460 × 75 = 345^k

797/2 = 399^k

Comp:

S: 155

C = 26.1 × 12.7 = 332 × 75 = 250^k

487/2 = 244^k

Riv: 399^k ÷ 9.02 = 44 +

SVERDRUP & PARCEL

JOB 2085 Orinoco River Bridge

COMPUTATIONS FOR Joint Design

L9 - Side Span

SHEET NO. 3 OF 7

DATE 7-64

BY R. Olson CHKD. P. Clark

L9-U10

Ten:

S = 307

T = 460 x .75 = 345^k

767/2 = 384^k

Comp:

S = -173

C = 332 x 75 = 250^k

505/2 = 252^k

Riv. 384 ÷ 9.02 = 42+

Gusset to Chord

399	250
252	250
651	500

$\frac{651 \times 24}{34.7} \div 9.02$

Riv. = 50+

Chord Splice

2 Pls 24 x 1/2

2 Pls 19¾ x 1/2

(10" Perf.)

A_G = 81.7 f = 19.8

A_N = 63.7 f = 21.8

Top & Bott Spl. Pl.

Try 15" width, t = thickness } 5-1" H.O.

t(15 - 5 x 1) = (19¾ - 10)1/2

10t = 4.875

t = 0.487 Use 1/2"

Use Spl. Pl. 15" x 1/2"

Cap. = 15 x 1/2 x 19.8 = 149

Riv. = 149 ÷ 9.02 = 16+

Web Splice

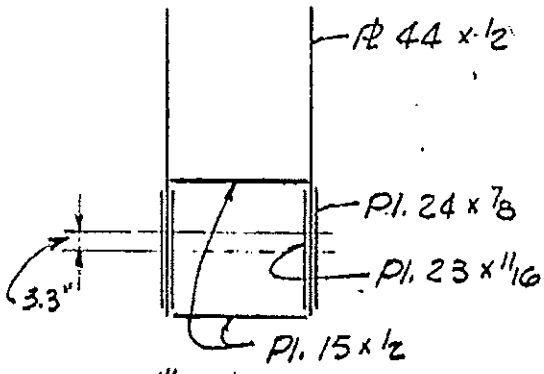

Base Mat'l. A_G: 81.7 f = 19.8
A_N: 63.7 f = 21.8

Capacity of Base Mat'l.
T: 63.7 x 21.8 = 1390
C: 81.7 x 19.8 = 1620

CG of Spl. Mat'l.
ΣM @ cg. base mat'l.

Web	23 x 1 3/8 = 32	x 0	
Gusset	44 x 1 = 44	x 10 =	440
Web	24 x 1 3/4 = 42	x 0	
C PLs	15 x 1 = 15	x 0	
	133		440

$\frac{440}{133} = 3.3''$

I_G: (taken along Line 1-1, see Sht. 7)

44 x 1	7099
44 x 6.7²	1969
24 x 1 3/4	2016
24 x 1 3/4 x 3.3²	462
7.5 x (16.1² + 9.4²)	2610
23 x 1 3/8	1394
23 x 1 3/8 x 3.3²	350
	15900 in⁴

H.O.:
$10 \times \frac{1}{2} + 6 \times 4\frac{1}{8} + 4 \times 1$
$= \sim 34 \text{ in}^2$

I_{HOLES}: (along line 1-1, see Sht. 7)

2.5 x 16.1²	650
2.5 x 9.4²	220
4 1/8 (13.4² + 9.4² + 5.4² + 1.4² + 2.6² + 6.6²)	1420
1 (11.6² + 16.1² + 20.6² + 25.1²)	1450
	3740

$A_N = 133 - 34 = 99 \text{ in}^2$
$I_N = 15900 - 3740 = 12160 \text{ in}^4$

SVERDRUP & PARCEL

JOB 2085 Orinoco River Bridge — SHEET NO. 5 OF 7

COMPUTATIONS FOR Joint Design — DATE 7-64

L9 - Side Span — BY R. Olson CHKD. P. Clark

Comp:

$$f = \frac{-1620}{133} + \frac{1620 \times 3.3}{15900} \begin{cases} -16.3 \\ +28.7 \end{cases}$$

(M, I, c)

$$= -12.2 - 5.5 = -17.7$$
$$+ 9.7 = -2.5$$

Ten:

$$f = \frac{1390}{99} + \frac{1390 \times 3.3}{12160} \begin{cases} +16.3 \\ -28.7 \end{cases}$$

$$= 14.1 + 6.2 = 20.3$$
$$-10.9 \quad 3.2$$

Rivs.

OS Pl: 24 × 7/8

A_G: 21 in² × 19.8 = 416

A_N: 15.8 × 21.8 = 344

Rivs 416 ÷ 9.02 = 46+ + 2 rows for indirect splice

IS Pl: 23 × 11/16

A_G: 15.8 × 19.8 = 312

A_N: 11.7 × 21.8 = 254

Riv. 312 ÷ 9.02 = 34+

Check rvts: 240

Gusset Pl 252

to spl. pl. one side jt.

6 rows × 6 × 2 in D.S × 2 = 144

4 " × 6 × 2 " = 48

4 " × 5 × 2 " = 40

232 ✓

Diagonal Components:

399	250
252	250
651^k	500^k

$$\frac{651 \times 24}{34.7} = 450$$

450 ÷ 252 = 1.8

1620 ÷ 232 = 7.0

8.8 k/r < 9.02 OK

525

8.11

Check Gusset pl. in Shear

$V = \frac{450}{2 \times .5 \times 70} = 6.43^{ksi} < 13.3^{ksi}$ OK

bending:

$I = 28,600^{in^4}$
(taken along Line 2-2)

$-2 \times 1 (4.25^2 + 7.25^2 + 10.25^2 + 13.25^2 + 16.25^2 + 19.25^2 + 22.25^2 + 25.25^2 + 28.25^2 + 31.25^2 + 34.25^2)$
$= 10,150$

$I = 28,600 - 10,150 = 18,450$

$f = \pm \frac{450 \times 12 \times 35}{18,450}$

$= 10.03^{ksi} < 21.8^{ksi}$
OK

SVERDRUP & PARCEL

JOB 8095 Orinoco River Bridge

SHEET NO. 7 OF 7

COMPUTATIONS FOR Joint Design

DATE 7-64

BY R. Olson CHKD. R. Clark

L9 - Side Span

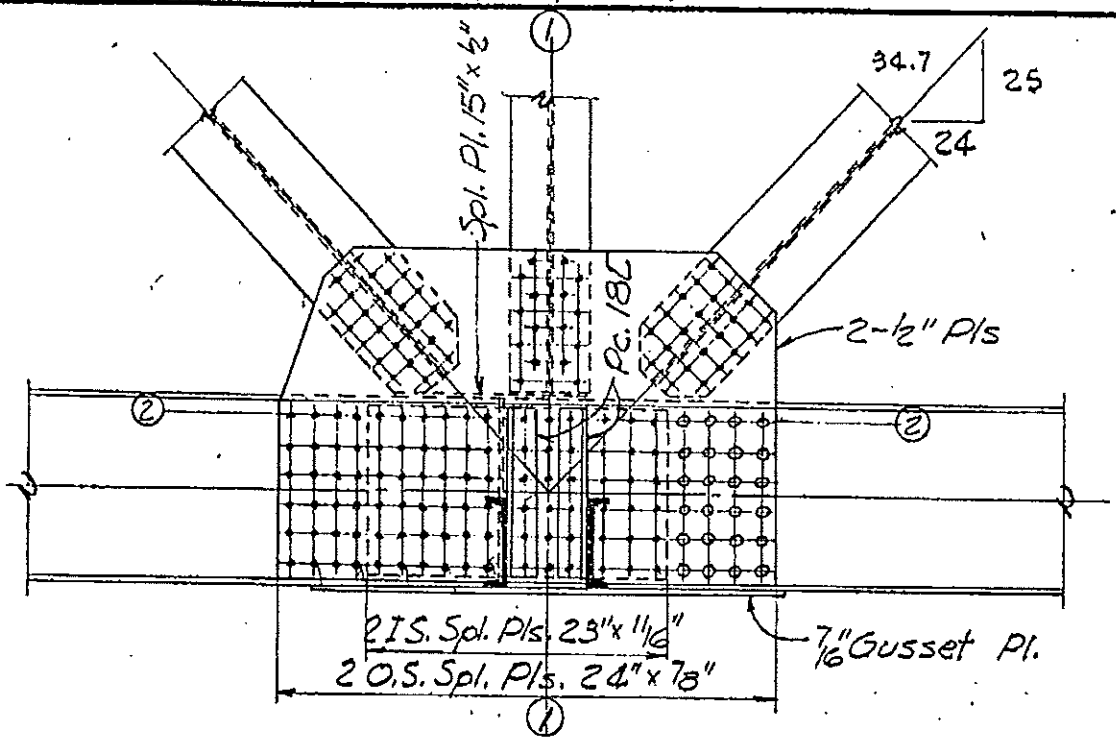

ELEVATION
PANEL POINT L9

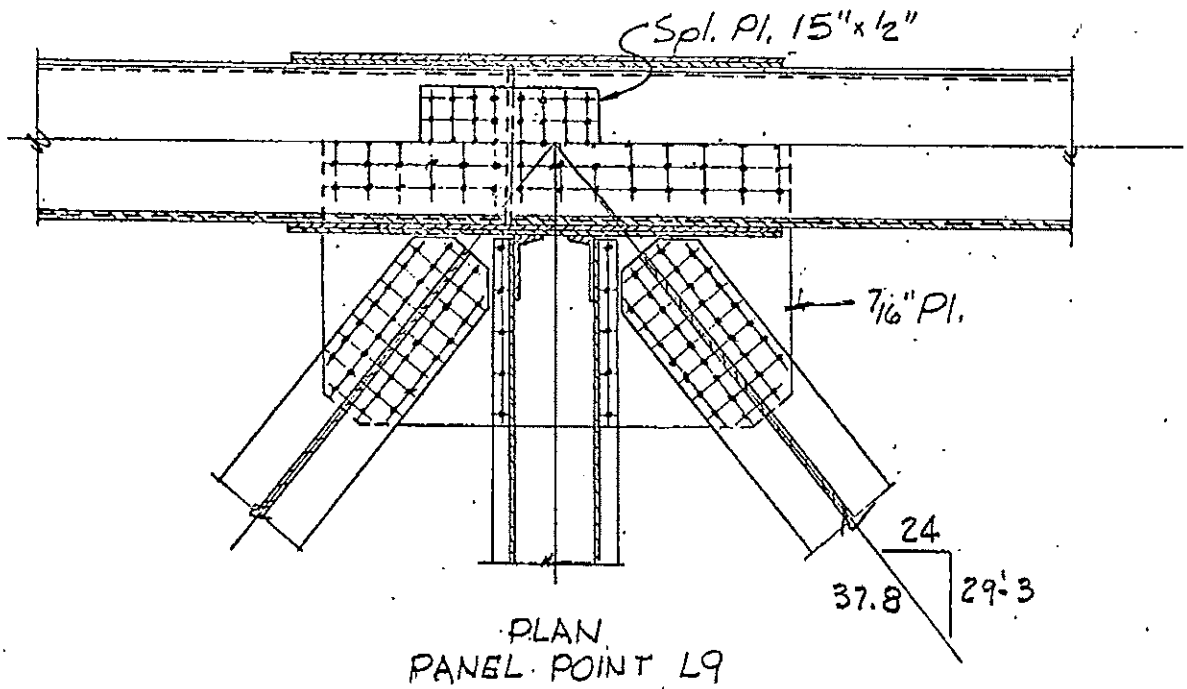

PLAN
PANEL POINT L9

SVERDRUP & PARCEL

JOB 2085 B08 Orinoco River Br

COMPUTATIONS FOR Stiffening Truss Joints

SHEET NO. 15 OF

DATE 6/64

BY FPB CHKD. Hammer

Joint U17

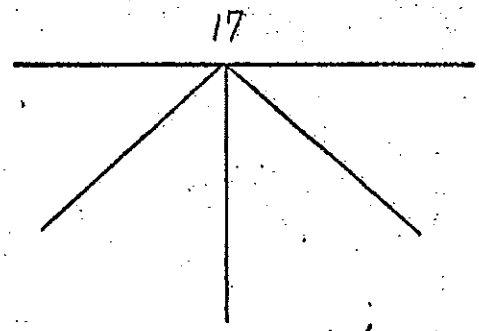

Horizontal

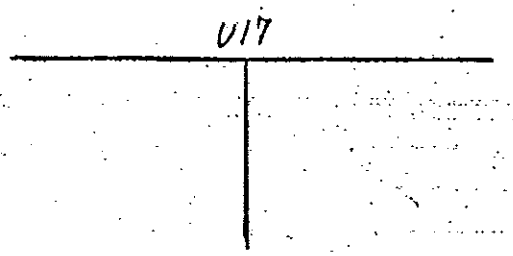

Vertical

Chord (No Splice)

2 Pls 24 x 1 5/8

1 Pl 19 3/4 x 1/2

1 Pl 19 3/4 x 1/2 (12" Perf)

Vertical

1 Pl 20 x 1/2

2 Pls 11 x 1/2

S = -212

C = 285^k

(Connect for 75%)

Laterals

ST 8 WF 29

A_g 7.8

A_n 5.9

f_t = +21.8

f_c = -13.8

S = 54^k

Trussed Floor Beam

Chord

2 - 12 Ls 20.7

1 Pl 5/16 x 17

A_g 17.4

A_n 12.4

f_c -20.2

f_t 21.8

SVERDRUP & PARCEL

JOB 2085 BOR Orinoco River Br

COMPUTATIONS FOR Strengthening Truss Jts

SHEET NO. 16 OF

DATE 6/84

BY EPB CHKD Hammer

Vertical

Design S -212

Capacity -285

75% Cap -213

Avg Cap+S = -248 ← Use

No Rivets 248 ÷ 9.02 = 27+
Use 28

Laterals

7.8 x 13.8 = -108
5.9 x 26.2 = +155
21.8

75% = -81^K or +116^K

Horiz F = $\frac{197 \times 48}{\sqrt{48^2+68.5^2}}$ = 125^K

No Rivets 12 + Mem to Gus
18 + Gus to Chord

Floor Beam Chord to Gusset

S = 0^K

75% 20.2 x 17.4 = 264

29 + Rivets

SVERDRUP & PARCEL

JOB 2085 B08 Orinoco River Br

SHEET NO. 17 OF

COMPUTATIONS FOR Stiffening Truss Joints

DATE 6/64

BY EPB CHKD Hammer

Connect top PL and C flanges to gusset

Connect C Webs & bott flanges to PL C

Top PL $\frac{5}{16} \times 17$ 5.3

C flange $3 \times \frac{1}{2} \times 2 =$ 3.0

8.3

C Remainder

$6.03 - 1\frac{1}{2} =$ 4.53 s.i.

Area 2×4.53 9.06

2×1.60 3.0

12.06

$P = \frac{264 \times 8.3}{17.4}$ 126^k

$P = \frac{264 \times 4.53}{17.4} = 69^k$

$P = 126 + 138 = 264^k$ ok

Rivets $69 \div 9.02 = 7+$

$126 \div 9.02 = 13+$

$3 + 1 = 4$ s.i. (Area of flange + $\frac{5}{16}$ Pl in contact

$\frac{4}{17.4} \times 264 = 61$

$61 \div 9.02 = 6+$

Tension

$\frac{202 \times 4.53}{17.4} = 53$

$\frac{53}{6 \times .601} = 14.7$ ok

Check Gusset for shear & Ecc ($\frac{3}{8}$ Pl)

$V = \frac{1.5 \times 125}{\frac{3}{8} \times 54} = 9.3$ KSI ok

$M = 7 \times 125$

$I = 4921 - 2 \times \frac{3}{8}(8.8^2 + 7.3^2 + 11.8^2 + 16.3^2 + 20.8^2 + 25.3^2)$

$I = 4921 - 2300 = 2621$

$f = \frac{7 \times 125 \times 27}{2621} = 9.1$ KSI ok

SVERDRUP & PARCEL

JOB 2085 BOB Orinoco

COMPUTATIONS FOR Joint U17

SHEET NO. 18 OF

DATE 5/64
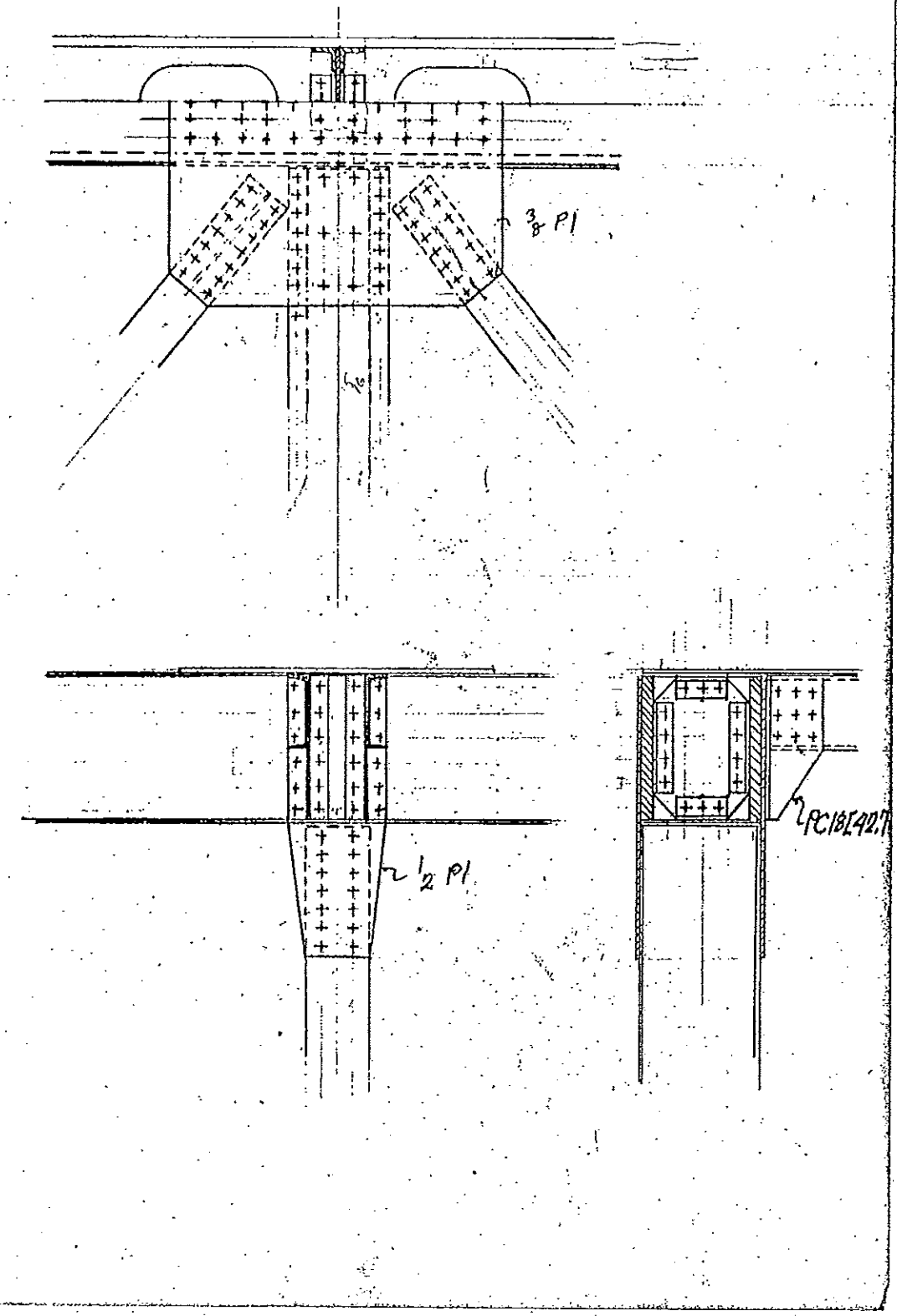
BY FPB CHKD Hammer