Docket No. SA-531

Exhibit No. 9-A

NATIONAL TRANSPORTATION SAFETY BOARD

Washington, D.C.

Systems Group Chairman's Factual Report

(37 Pages)

NATIONAL TRANSPORTATION SAFETY BOARD
Office of Aviation Safety
Washington, D.C. 20594

May 6, 2009

Systems Group Chairman's Factual Report

DCA-09-MA-027

A. ACCIDENT

Operator:	Colgan Air, Inc
Location:	Clarence Center, NY
Date:	February 12, 2009
Time:	2217 Eastern Standard Time
Airplane:	Bombardier Dash 8-Q400, N200WQ

B. SYSTEMS GROUP

Chairman:	Scott Warren National Transportation Safety Board Washington, D.C.
Member:	Tom McCormick Federal Aviation Administration Rochester, NY
Member:	Robert Melone Colgan Air Latham, NY
Member:	Matt Green Air Line Pilots Association Newark, NJ
Member:	Graeme Houston Bombardier Toronto, Ontario, Canada

C. SUMMARY

On February 12, 2009, about 2217 eastern standard time (EST), a Colgan Air Inc., Bombardier Dash 8-Q400, N200WQ, d.b.a. Continental Connection flight 3407, crashed during an instrument approach to runway 23 at the Buffalo-Niagara International Airport (BUF), Buffalo, New York. The crash site was approximately 5 nautical miles northeast of the airport in Clarence Center, New York, and mostly confined to one residential house. The four flight crew and 45 passengers were fatally injured and the aircraft was destroyed by impact forces and post crash fire. There was one ground fatality. Night visual meteorological conditions prevailed at the time of the accident. The flight was a Code of Federal Regulations (CFR) Part 121 scheduled passenger flight from Liberty International Airport (EWR), Newark, New Jersey to BUF.

The Systems Group convened on February 13-18, 2009 in Clarence Center, NY, to examine and document the aircraft.

D. DETAILS OF THE INVESTIGATION

1.0 Cockpit Area

The wreckage in the cockpit area was examined, and was found to be severely burned. Instrument panels recovered were the overhead panel, including the Ice Protection panel, and a portion of the glareshield. Four of the five display units were recovered, and all were severely burned. Items identified in the cockpit were:

Ice Protection Panel (see figures 1 and 2)

Airframe Mode Select – Missing
Airframe Manual Select - Missing
Prop De-ice – Set screw locations at 12:00 and 3:00
Increase Ref Speeds Switch – “INCR”
Boot Air Switch – Appeared to be in the “ISO” position, but the switch was very degraded
Pitot Static Heat – STBY appeared in the “ON” position but switch had free movement
System 1 appeared “OFF” but switch had free movement
System 2 appeared in the “ON” position but switch had free movement
Windshield Heat – Set screw locations at 10:00 and 2:00
Windshield Wiper – Set screw locations at 10:00 and 2:00
Pilot Side Window Heat – Present but free to move

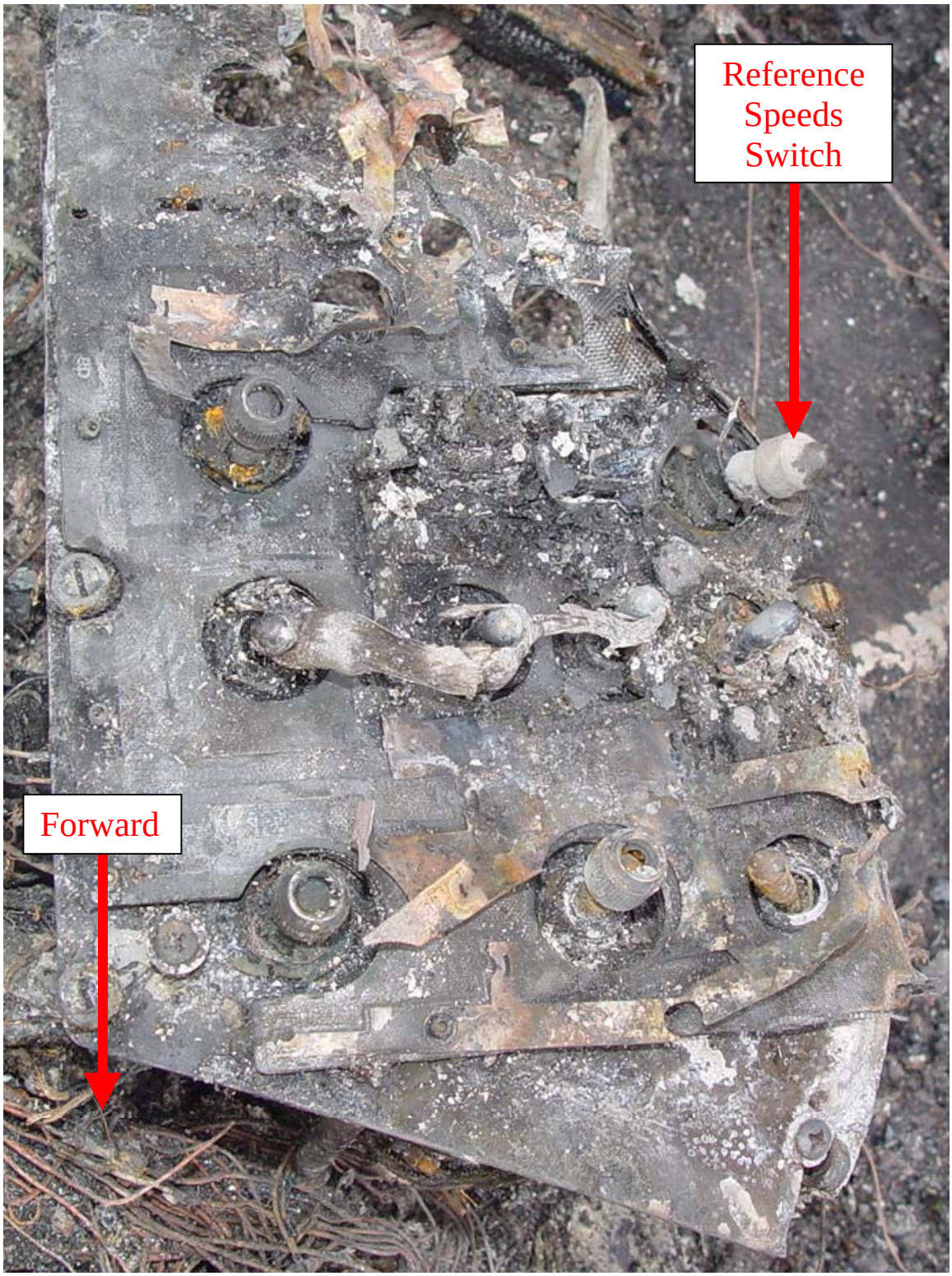

Figure 1
Ice Protection Panel (Accident Airplane)

Figure 2
Ice Protection Panel (Exemplar Airplane)

Fire Protection Panel

#2 Engine Extinguisher – Appeared in center position but heavy fire residue present

A/C Control Panel

External Power – "OFF"
Gen 1 – Appeared "ON" but heavy fire residue present
Gen 2 – Appeared "ON" but heavy fire residue present

Panel Lighting Panel

Overhead Console – Flat side of knob post at 10:00
Glare Shield – Flat side of knob post at 11:00
CTR Console FWD – Flat side of knob post at 10:00
CTR Console AFT – Flat side of knob post at 10:00

Air conditioning Panel

Recirc – Appeared "OFF" but heavy fire residue present
Bleed 1 – Appeared "OFF" but heavy fire residue present
Bleed 2 – Appeared "ON" but heavy fire residue present
Bleed Air Knob – Missing
Gauge Knob – One set screw location at 3:00
Left Packs Switch – Appeared "AUTO" but heavy fire residue present
Right Packs Switch – Appeared "AUTO" but heavy fire residue present
Cabin Temp Control Knob – Set screws at 9:00 and 12:00
Cockpit Temp Control Knob – Fire residue prevented identification of set screw locations

Engine Start Panel

Select Switch – Appeared to be in the #1 position, but heavy fire residue present

Cabin Altitude Panel

Mode Control Switch – Auto
FWD Outflow – Set screws at 5:00 and 7:00

Caution/Advisory Panel

Fasten Belts – Present but free to move
No Smoking – Appeared centered but heavy fire residue present
Test Switch – Appeared centered but heavy fire residue present
DIM/BRT – Appeared centered but heavy fire residue present
Emergency Lights – "ON"

Exterior Lights "Landing" Panel

Approach – Free to move
Taxi – Free to move
Landing Light Switch – Damaged/Undetermined

Exterior Lights "Wing" Panel

Wing Inspection – Appeared to be "ON"
A/COL – Appeared to be "OFF"
Position – Appeared to be "ON"

Glare Shield

Flight/Taxi Switch – Appeared to be in the "FLIGHT" position, but was damaged
Anti-skid Switch – Present but free to move
GPWS Landing Flap Selector – Flat side of center post in 5-6:00 position

Test Panel

Pilots Dimmer Knob – One set screw at the 9:00 position
Prop Overspeed Governor Test Switch – Missing
Take Off Warning Test – Loose
ADC Test – Loose
Stall Warning Test – Damaged/Undetermined
Steering – Appeared in the "ON" position

Landing Gear Panel

Landing Gear Handle – Appeared to be centered in track but was damaged
Lock Release Lever – Appeared in the up position but was damaged

Engine Control Panel

Fuel Control Transfer Switch – Appeared centered but damaged

Fuel / Defuel Panel (Aft portion of Right Engine Nacelle)

Test/ Reset – Neutral
Increase / Decrease – Neutral
Refuel/Defuel selector knob – Set screws at 10:00 and 2:00
Fuel Tank Switches – Tank 1 appeared to be in the "CLOSED" position
Tank 2 appeared to be in the "OPEN" position

Both control columns were recovered, along with a small portion of one control yoke. Portions of both sets of rudder pedals were also recovered. The throttle quadrant was identified (see figure 3), and the power levers appeared to be in the full forward position, and the condition levers were also identified. The #1 condition lever appeared to be in the full forward position and the #2 condition lever appeared to be mid-range. All of these items were severely damaged by fire and impact.

Figure 3
Throttle Quadrant

1.1 Avionics Units

A number of avionics units were recovered. There were no identification plates on any of the boxes, and all of the units were severely burned and damaged. Items that could be identified included:

#1 PFD
3 additional electronic instrument system (EIS) displays
Integrated Standby Instrument
Glare Shield
Integrated Flight Cabinet
2 ARCDUs
AOA Transducer
ELT
A/C contactor box

1.2 Ice Detection and Deicing System

1.2.1 Deicing System operation

The airframe deicing system is divided into two identical subsystems, one subsystem per engine (see figure 4). Each subsystem uses bleed air from its related engine to inflate boots on the leading edges of the wings, horizontal stabilizer, vertical stabilizer, and nacelle air intakes. The inflation of the boots is designed to remove the accumulated ice from these surfaces. Both subsystems are connected to each other through an isolation shut off valve (ISOV). The rear parts of the subsystems (in the aft fuselage) are also connected by a restrictor.

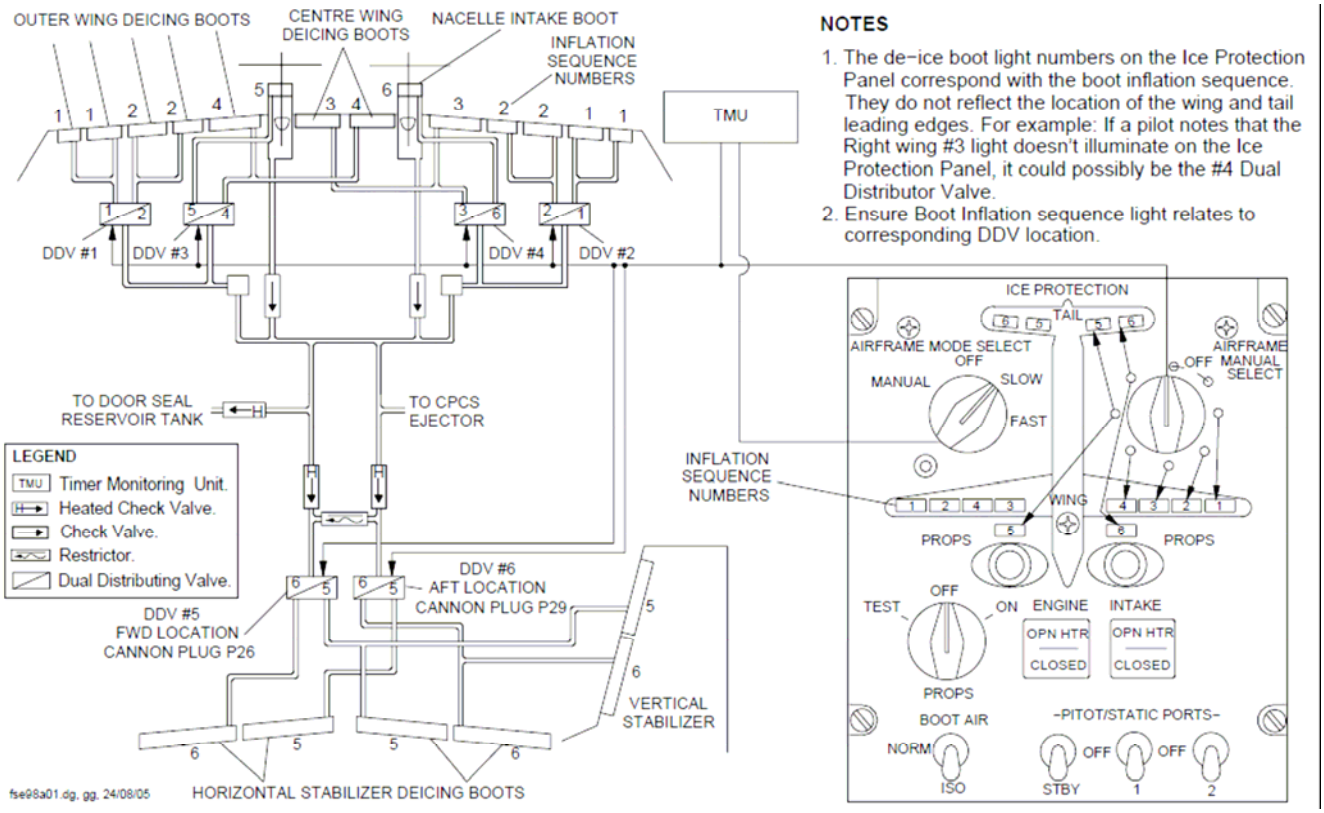

Figure 4
Deicing System Schematic and Controls

According to the Bombardier aircraft maintenance manual (AMM), the air intake deicing system includes electrical heating elements installed in the inner surface of the intake adapter and pneumatic deicing boots that form the air intake lip.

Three pitot-static probes incorporate electrical heating elements to prevent icing.

Both windshields and the pilot's side window have electronically controlled heater elements laminated into the panels to keep the windows at a predetermined temperature to prevent icing and misting.

According to the Bombardier AMM, the propeller anti-icing system has electrical heating elements installed in the leading edge of each propeller blade to remove ice accumulations. When heat is selected "ON", all six blades on one side of the aircraft are heated at one time, then the propeller on the other side is heated.

Eighteen pneumatically inflatable rubber deicing boots are bonded to the airframe structure on the wing and tail leading edges. Bleed air from both

engines is supplied to the boots causing them to inflate. The system operates at a regulated pressure of 18 psig.

The isolation shutoff valve and the restrictor connect the left and right systems. Normally, the ISOV opens as soon as 28 Vdc electrical power supply is available.

Three switches are used to control the deicing system. These switches are located on the Ice Protection control panel and are labeled: Airframe Mode Select, Airframe Manual Select, and Boot Air.

According to the Bombardier AMM, monitoring of the boot operation is done by observing a total of 14 boot inflation advisory lights. Eight of these lights correspond to the boots for the wings, four lights correspond to the boots for the tail, and two correspond to the boots for the engine inlets. All 14 advisory lights are located on the Ice Protection control panel. A boot inflation advisory light illuminates when there is a pressure increase in the corresponding boot. Correct operation of the wing boots is compulsory for operation under icing conditions. It is necessary to check their operation by observing the advisory lights or by looking at the boots to detect a malfunction.

The deicing system consists of two “L” shaped manifolds, each of 0.75 in. diameter. The manifolds along the wing front spar have a normally open ISOV. In each wing, the manifold supplies air to the boots through two Dual Distributing Valves (DDV). Each manifold has a pressure transducer connected to a dual indicator in the flight compartment. The system cycles air to the boots in a sequence, causing the boots to inflate briefly and shed ice accumulation. The sequence consists of 6 boot inflation cycles of 6 seconds each. The air is supplied from the engines through one pressure regulating valve with a check valve. These valves are located in each engine nacelle.

The two branches deliver air to the rear fuselage and then through two more DDV’s, one per side, to the horizontal stabilizer and vertical stabilizer boots. If one of the supply branches to the tail ruptures, check valves are designed to prevent complete loss of pneumatic supply to the tail boots.

The Timer and Monitor Unit (TMU) sequences the DDV operation according to a pre-defined cycle. It commands the appropriate DDV to distribute air supply through one of its outputs. After the inflation cycle time, it commands the DDV to let air flow back and exhaust through the ejector. During this cycle, the timer monitors the operation of the pressure switches incorporated in each DDV output to confirm the operation of the DDV. The timer controls the deicing cycles according to the selected operating mode, SLOW or FAST, and also controls the heaters of all heated equipment of the deicing system.

The TMU monitors the air data sensor heaters for the two Pitot/Static probes, the Standby Pitot/Static probe, and the two Angle of Attack Sensors. When no current flows into the heating element of one pitot/static probe, or when the timer is not powered, a PITOT HEAT 1, PITOT HEAT 2 or PITOT HEAT STBY caution light comes on. A failure signal is recorded in the TMU and is sent to the Stall Protection Modules (1 and 2) when no current flows into the heating element of one AOA vane.

The TMU compares the command signal and the low pressure switch (LPS) signal to determine if the DDV operation is normal. If the TMU commands one output to open, and the related LPS does not send a signal back to the TMU, the fault is as follows: the DDV output did not open, or a boot has burst and pressure cannot increase. If the TMU receives a signal from a LPS associated with an output that has not been commanded, then the DDV operation is not normal. In both cases, the TMU sends a discrete signal to the Caution and Warning panel and the DEICE PRESS caution light comes on.

1.2.2 Dual Distributing Valves

A total of 5 (out of 6) dual distributing valves (DDV) were recovered (see figures 5 through 16). These units were retained, and will be taken to the manufacturer for further examination. One of the units was slightly fire damaged, and the remaining four units were not fire damaged. The nomenclature recovered from the DDV's was as follows:

Manufacturer: Sweeney Eng Corp
All manufactured 10/07
P/N 4100S005-03
S/N 3698 – Found near right engine
S/N 3695 - Found location not positively identified
S/N 3727 – Attached to structure, found location not positively identified
S/N 3685 – Forward unit in tail of aircraft
S/N 3690 – Aft unit in tail of aircraft

Figure 5
Dual Distributing Valves

Figure 6
Dual Distributing Valve (S/N 3698)

Figure 7
Dual Distributing Valve (S/N 3698)

Figure 8
Dual Distributing Valve (S/N 3695)

Figure 9
Dual Distributing Valve (S/N 3695)

Figure 10
Dual Distributing Valve (S/N 3727)

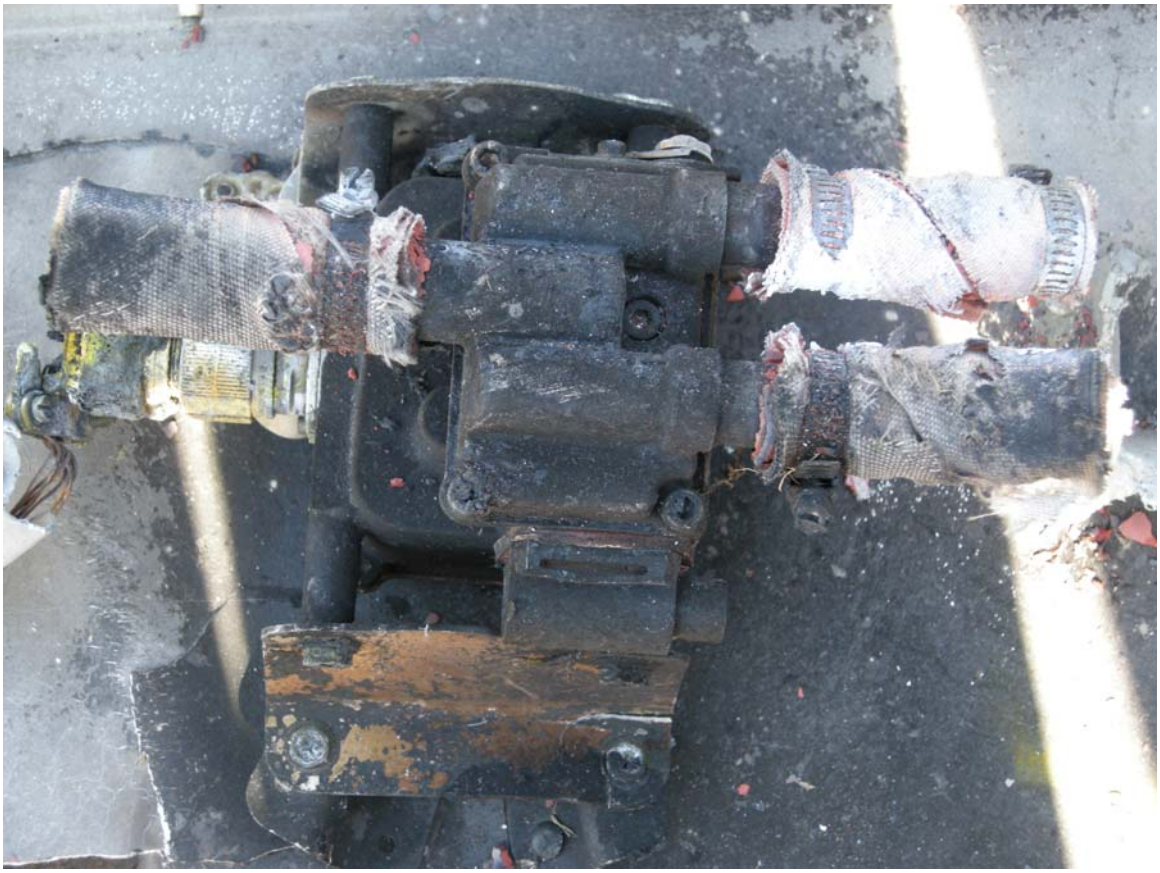

Figure 11
Dual Distributing Valve (S/N 3727)

Figure 12
Dual Distributing Valves – Aft Units

Figure 13
Dual Distributing Valve (S/N 3685)

Figure 14
Dual Distributing Valve (S/N 3685)

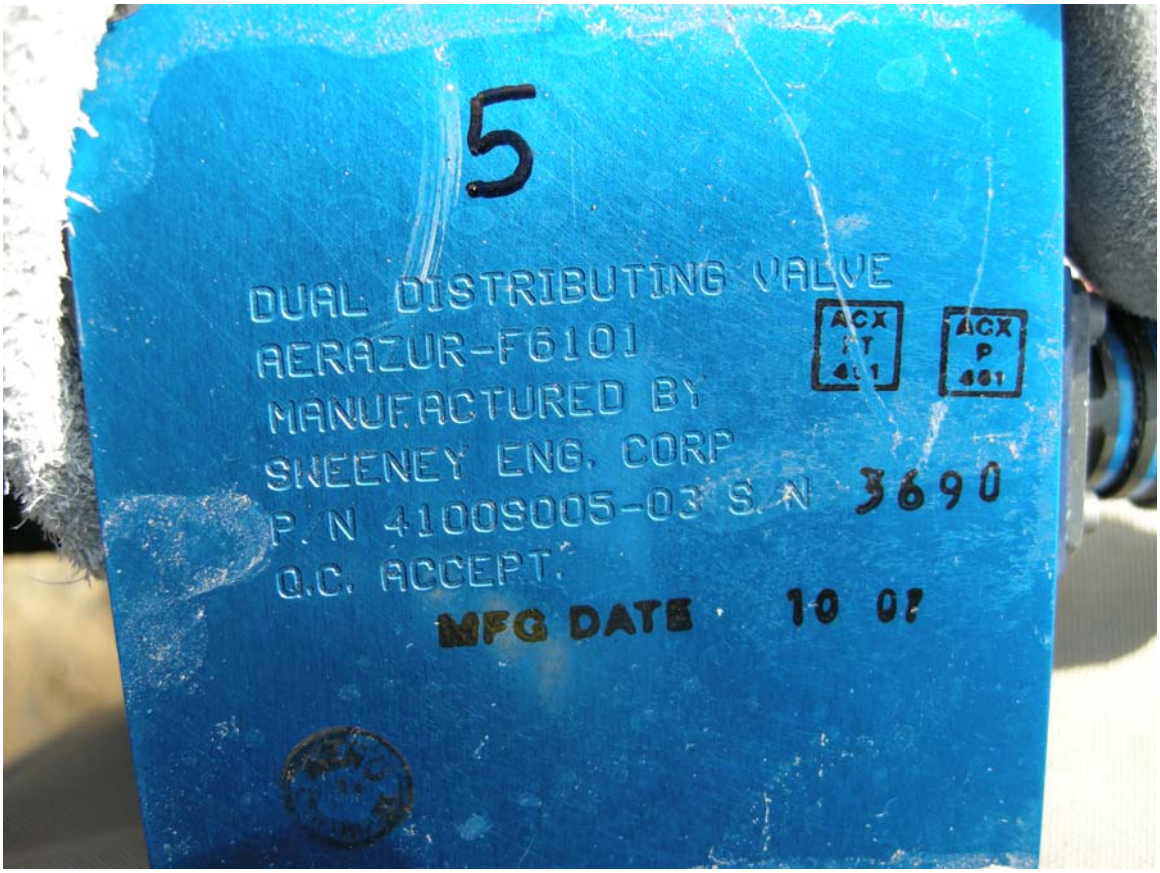

Figure 15
Dual Distributing Valve (S/N 3690)

Figure 16
Dual Distributing Valve (S/N 3690)

1.2.3 Isolation Valve

The isolation valve located along the wing front spar was identified, and it was still in its proper location. The valve appeared to have soot damage, but was not melted. The wires leading to the connector for the valve were not present, and they appeared to have been consumed by the fire.

1.2.4 Leading Edge Boots

Two leading edge sections from the right wing were identified, and the leading edge boots were examined on those sections. Both of these boots appeared to be still bonded to the leading edge, except in areas that appeared to be associated with impact damage. There were tears in the surface of the leading edge boots, and the leading edge structure behind the boots was fractured (crushed), and there were breaks in the sides of the leading edge material. The pneumatic lines leading to the connections on the inside of the

leading edge section were still present and the connections appeared to be intact.

Most of the left wing was consumed in the post-impact fire, and no segments of the leading edge boots from the left wing were identified.

The leading edge boots for the vertical and horizontal tail were examined, and these boots appeared to be in good condition. The boots were still bonded to the leading edge structure, and there were only minor tears present in the surfaces of the boots. The leading edge of the left horizontal stabilizer appeared to have a deformation of approximately 2 inches in the upper surface of the inboard boot. The boot material was not damaged at this location, but the leading edge of the stabilizer appeared to be deformed. The boot appeared to be slightly charred in several locations. Strips of speed tape were noted in two locations on the left horizontal stabilizer. The tape was located at the inboard edge of the inboard boot and at the outboard edge of the inboard boot (between the inboard and outboard boots). According to Colgan Air, this tape was a deferred maintenance item resulting from the inboard boot replacement conducted on January 7, 2009.

1.2.5 Deice System Pneumatic Lines

The deice system pneumatic lines that remained in the wreckage were examined. These lines were located in the center wing area, the dorsal fairing, the aft fuselage, the vertical tail, and the horizontal tail. In all locations, with the exception of obvious impact/fire damage, the pneumatic lines did not show any evidence of leaks, ruptured lines or missing/damaged line couplings.

1.2.6 Ice Detector Probes

The ice detector probes are designed to indicate to a signal conditioner that ice is accumulating on the aircraft. The signal conditioner provides an ICE DETECTED message on the Engine Display. The ice detector probes are located as shown in figure 17.

The ice sensor operates on a piezoelectric principle within the ice detector probe. It continuously vibrates at its natural resonant frequency and when ice accumulates on the ice sensor, the frequency of vibration increases due to an increase in rigidity. Water or liquid contaminants increase the diaphragm mass without increasing its stiffness, causing the natural frequency to drop. The frequency change is electronically converted to supply the electrical signal that causes the ice condition indication on the Engine Systems Integrated Display (ESID), Engine Display page.

When one of two ice detector probes has sensed ice accumulation above its threshold, an ICE DETECTED message appears in white lettering, and is centered just below the Static Air Temperature (SAT) indication. It appears in reverse video for the first five seconds then in normal video. The system is designed to advise the flight crew of icing conditions when ice accumulation is greater than 0.02 in (0.5 mm) on the probe. Only one advisory message is shown when ice is sensed by one or both ice detector probes.

No remains of the ice detector probes were identified in the wreckage.

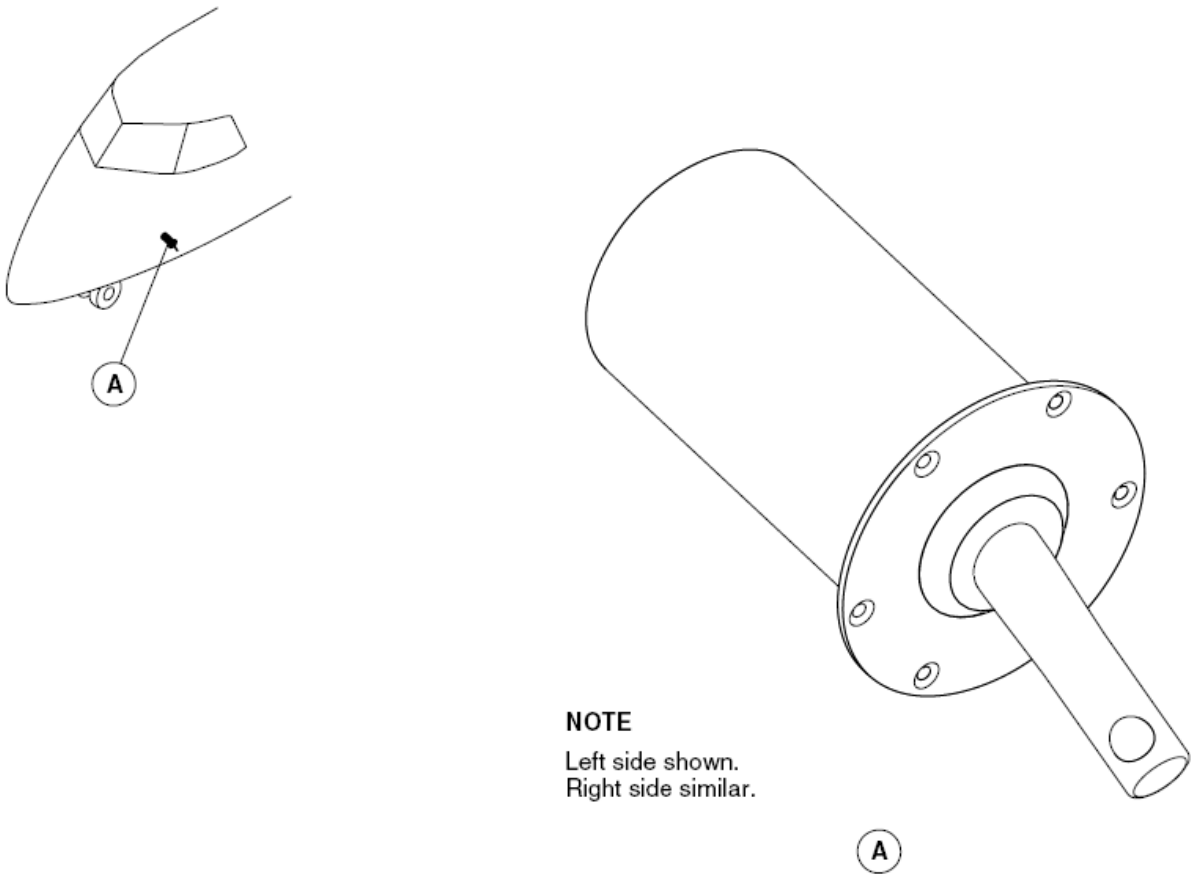

Figure 17
Ice Detector Probe Location

1.3 Flap System

1.3.1 Flap System Description

Each wing has an inboard and an outboard flap surface. The inboard flap on each wing is installed between the fuselage structure and the engine nacelle inboard structure. The outboard flap on each wing is installed between the engine nacelle outboard structure and the aileron (see figure 18).

The flap surfaces are electronically controlled and hydraulically operated. The flaps are extended when the flap lever is moved in its quadrant. The flap quadrant has five positions corresponding to the five possible flap positions: 0, 5, 10, 15, and 35 degrees. To select a flap position, the flap lever is moved to the desired gate. A trigger located below the flap lever knob must be pulled up before the lever can be moved and released before the new position is reached. The flap lever is mechanically forced into each gate, so it is not possible to pass a flap position without first stopping at that gate.

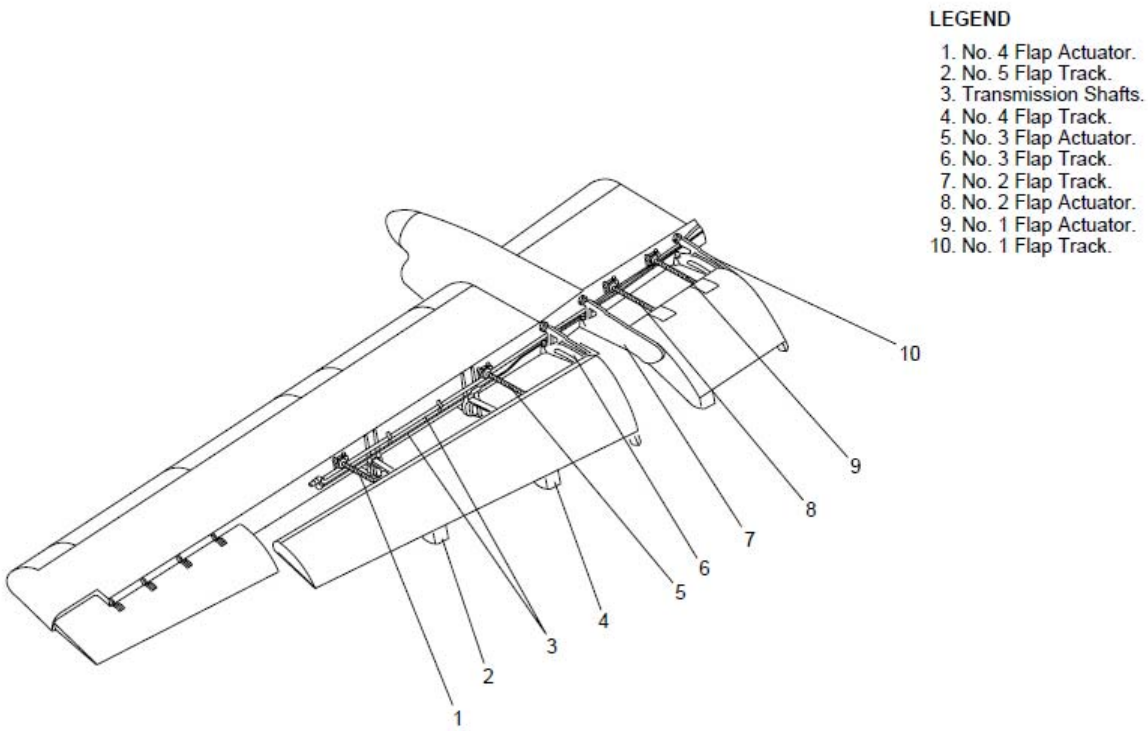

Figure 18
Flap Surfaces and Component Locations

There are eight flap actuators installed on the aircraft, four on each wing. The

flap actuators are mechanical units designed to convert a high speed, low torque rotary drive to a low speed, high torque linear drive. The flap actuators move the flap surfaces to a selected position and keep the selected position against the aerodynamic forces on the flap surfaces. The flap actuators receive the mechanical input from the transmission shafts or the torsion bars through a spline connection and transfer this force to the next actuator by a through shaft. The no.1 and no. 2 flap actuators on each wing are identical and operate the inboard flap section. The no. 3 and no. 4 flap actuators on each wing are constructed slightly different from each other and operate the outboard flap section.

Two different explanations for flap failure annunciations were found. According to the Aircraft Maintenance Manual (AMM) chapter 27-52, dated November 15, 1999, if a flap failure occurs, either the FLAP POWER or the FLAP DRIVE caution light comes on. If the failure locks the flap system, the FLAP POWER caution comes on. FLAP POWER is a fault indication. The flap system is still operable but with reduced performance. The light will go out if the failure disappears. The light will come on for the faults that follow:

Flap Asymmetry
Flap uncommanded movement;
Flap position transducer failure
Flap lever transducer failure
No hydraulic pressure after selection command
Electrical power loss

If the flap system can only operate in a degraded mode, the FLAP DRIVE caution light comes on. FLAP DRIVE is a fail indication. The flap system is locked in a fail safe condition and is no longer operative. This fault must be reset through the flap control unit. The FLAP DRIVE light will come on for the following faults:

Hydraulic pressure at flap power unit without selection command;
Flap stall;
Flap position output from the flap control unit is not valid;
Read only memory failure in the microprocessor of the flap power unit.

According to the Aeroplane Operating Manual (AOM), chapter 12, section 12.8, dated August 8, 2005, if a flap failure occurs during flap extension or retraction, either the FLAP POWER or the FLAP DRIVE caution light will come on. If the FLAP POWER caution light comes on, a flap failure has occurred. The flaps will lock in the last position reached prior to failure. All further flap movements will be inhibited. If the FLAP DRIVE caution light turns on, this is a flap fault indication. The flaps may still be operable in some instances with reduced performance. The fault is automatically reset if the

condition goes away.

1.3.2 Flap Actuators

Portions of all eight of the flap actuators were recovered, but only seven contained the appropriate portions to allow for a measurement of the jackscrew extension present in the unit. The dimension measured was between the over travel stop on the jackscrew and the body of the actuator (see figure 19). The dimensions noted were as follows:

Position 1 (Left wing, outboard flap, outboard position): ½ inch
Position 2 (Left wing, outboard flap, inboard position): 9/16 inch
Position 3 (Left wing, inboard flap, outboard position): ¾ inch
Position 4 (Left wing, inboard flap, inboard position): ½ inch
Position 5 (Right wing, inboard flap, inboard position): ¾ inch
Position 6 (Right wing, inboard flap, outboard position): 1 ¾ inch
Note: this jackscrew was very easy to turn, and at least one complete turn of the jackscrew was noted during the recovery of the unit.
Position 7 (Right wing, outboard flap, inboard position): 1/8 inch
Position 8 (Right wing, outboard flap, outboard position): this part of the unit was not recovered, so the dimension could not be taken.

These dimensions were all consistent with the flaps being close to the fully retracted position.

Figure 19
Measurement Location for Flap Jackscrews

1.4 Flight Controls

1.4.1 Longitudinal Control System Description (see figure 20)

Longitudinal (pitch) control of the aircraft is supplied by two independent, manually operated, hydraulically powered elevators. Fore and aft movement of either the pilot's or the copilot's control column supplies pitch commands to the hydraulically powered elevators. The autopilot also supplies pitch commands to the elevators.

According to documentation supplied by Bombardier, the control columns can travel 8.185 deg forward and –12.363 deg aft of the neutral position.

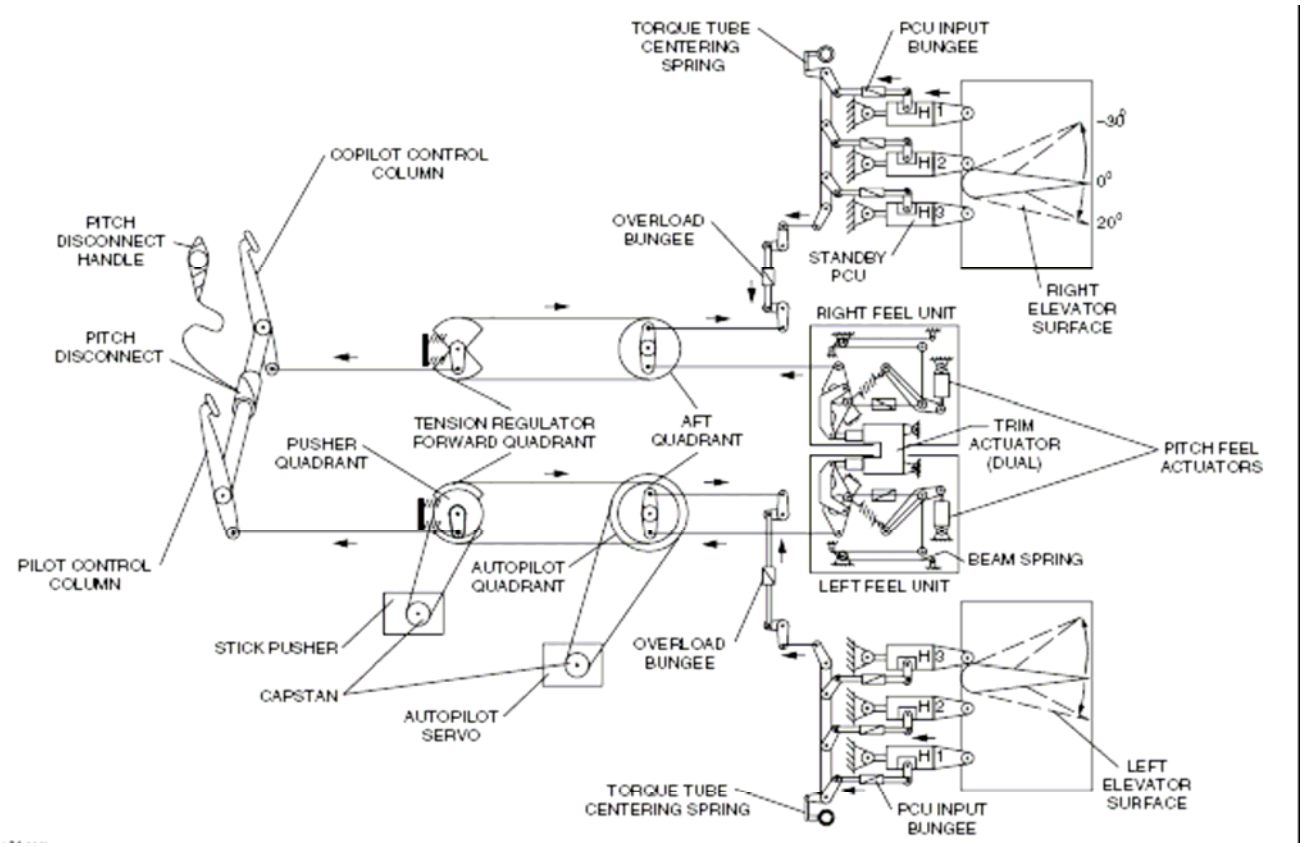

Figure 20
Longitudinal Control System

Fore and aft movement of the pilot's and copilot's control columns is transferred through two fully independent cable and pulley control circuits to the left and right elevator Power Control Units (PCUs). There are three identical hydraulic PCUs (outboard, center and inboard) on each elevator. The outboard and center PCUs on each elevator are active at all times while the inboard PCU is on standby. The No.1 hydraulic system supplies power to the left and right outboard PCUs. The No.2 hydraulic system supplies power to the left and right center PCUs. The standby No.3 hydraulic system supplies power to the left and right inboard standby PCUs. A switch labeled STBY HYD PRESS in the flight compartment activates the inboard PCUs.

Six PCU input bungees are installed in series with the six elevator PCUs. The input bungees prevent PCU runaway if the main control valve in the PCU jams. Two overload bungees are installed in the horizontal stabilizer; one in each elevator circuit. The overload bungee prevents any damage to the elevator control circuit in the event of a jam in one or more of the elevator PCUs.

An ELEVATOR ASYMMETRY caution light comes on when there is a difference between the left and right elevator positions. Position indication of the elevators is

displayed on the Powered Flight Control System Indicator (PFCSI) shown on the Multi Function Display (MFD).

The input commands from the control columns are transferred to the elevator PCUs which, in turn, move the elevator surfaces. Therefore the pilot is unable to feel the aerodynamic forces acting on the elevator surfaces. Two identical Pitch Feel and Trim Units (PFTUs), left and right, supply both pitch feel and pitch trim inputs to the elevator control system, and they are located in the vertical stabilizer. The right PFTU is in parallel with the copilot's elevator controls and the left PFTU is in parallel with the pilot's elevator controls. The PFTUs supply elevator control column forces which increase with column displacement as a function of airspeed and normal acceleration of the aircraft. Air Data Units (ADUs) send airspeed information to the FCECU. Artificial feel is produced by two pitch feel actuators attached to the PFTUs. As airspeed increases or decreases, the FCECU commands the pitch feel actuators to extend or retract respectively. This results in an increase or decrease in the amount of artificial feel acting on the control columns. If one pitch feel actuator fails, the elevator control system continues to operate using the operational actuator but with reduced artificial feel. Centering springs help to return the elevator control surfaces to a neutral position.

Pitch control movement of the pilot's and the copilot's control columns is supplied to the remaining portions of the flight control system through pushrods connecting each control column to the left and right forward elevator quadrants. The forward elevator quadrants are installed below the flight compartment floor. On the accident aircraft, these pushrods are equipped with force sensors. There are two sensors, one for each control column. The force sensors transmit a signal in proportion to the input force applied on control columns. The signal transmitted from sensors is recorded by the Flight Data Recorder.

Gust protection for the elevators is supplied by trapped hydraulic fluid within the PCUs when the system is depressurized.

Two pitch trim actuators installed on top of the pitch feel and trim units supply elevator trim. The elevator trim actuator is controlled automatically by the autopilot or manually by the trim switches on the pilot's and copilot's control handwheels. Elevator trim position is shown in the flight compartment on the elevator trim indicator located on the left side of the centre console. The indicator displays elevator trim position as commanded by the trim switches on the pilot's and copilot's handwheels. The indicator is labeled “NU” for nose up, “ND” for nose down and “TO” for take-off. A white band next to the “TO” setting indicates the amount of elevator trim which is acceptable for take-off. An aural warning sounds if a take-off is attempted with the elevator trim position outside the take-off range.

The pilot's and copilot's control columns are mechanically connected to each other through the pitch disconnect mechanism. If a jam occurs in either control circuit, the two control columns can be disconnected from each other by using the pitch disconnect handle located on the left side of the center console. When the handle is in the engaged

“IN” position, the pilot's and copilot's control columns are connected to each other by a clutch. When the handle is pulled out and rotated 90 degree, the clutch disengages and disconnects the two control columns. The pilot with the free control column retains pitch control. The aircraft can then be flown using the remaining operational elevator control circuit

1.4.1.1 Stall Protection System Description

The left and right independent stall warning systems supply a warning of an impending stall by activating both stick shakers on the control columns. If either the left or right system senses an impending stall, both stick shakers activate. An electrically operated stick pusher system activated by the Stall Protection Module supplies forward pitch force to prevent a deep stall. The electric actuator pushes both control columns forward if an uncorrected stall is sensed by both left and right systems. The stall warning/stick pusher system supplies the flight crew with warnings of an impending stall through an audio warning and a mechanical shaking of the control columns. If the stall continues, the stick pusher applies a pitch force to push the control columns forward and decrease the angle of attack to prevent further penetration of the stall threshold.

The Stall Protection System (SPS) uses two Stall Protection Modules (SPM1, SPM2) to control their related Stick Shakers. The two Stall Protection Modules (SPM1, SPM2) function together to control the Stick Pusher.

The Stall Protection System (SPS) operates when the following conditions are true:

- Calibrated airspeed is less than 215 kt (399 km/h)
- Above Ground Level (AGL) altitude is more than 200 ft (61 m)
- Stick pusher PUSH OFF annunciator switch is not pushed to the OFF position.

When the aircraft is near a stall condition, an electrical motor inside the stick shaker turns an unbalanced mass at approximately 1600 rpm. This causes the control columns to vibrate. In addition to this tactile warning, the stick shaker motor and the rattling of the chain mechanism inside the control column creates a loud noise. When one stick shaker is operating, its vibration is transmitted through the torque tubes and the push/pull rod to the other control column.

The stick pusher will move the control columns to decrease the angle of attack of the wing when the aircraft is in a stall condition. The pilots can override the stick pusher clutch by applying an opposite breakout 36 kilogram-force (kgf)/79.2 lbf to the control column. After breakout, a force of 30 kilograms-force (kgf)/66 lbf is needed to continue to override the clutch.

The stick pusher is connected to the elevator control system with a mechanical cable. When commanded, the stick pusher turns until it touches a mechanical stop, corresponding to a fixed column position. The stick shaker, stick pusher actuator and

capstan are passively cooled. The stick pusher actuator can operate against a stalling load for only a short time before overheating. Accordingly, the SPS contains software protection to limit the stick pusher operation to a maximum of 15 seconds, with a subsequent time delay of 1 minute before the stick pusher can be commanded again.

In a stall condition, a STICK PUSHER SHUT OFF switchlight selection can be made to manually stop a stick push or the pilots can override the stick push using the control columns. The pilot stick pusher SHUT OFF switchlights supply a PILOT RELEASE signal to the stick pusher actuator to prevent stick pusher operation. The copilot stick pusher SHUT OFF annunciator switch supplies a CO-PILOT RELEASE signal to the stick pusher actuator to prevent stick pusher operation. The stick shakers will continue to operate.

The Stall Protection Modules (SPM1, SPM2) calculate when to start and cancel the stick shakers and stick pusher operation. When the Stall Protection Modules (SPM1, SPM2) operate their related stick shakers, a signal to the Automatic Flight Control System (AFCS) disengages the autopilot. In addition, a signal to the Ground Proximity Warning System (GWPS) prevents the PULL UP audible alerts. Each Stall Protection Module (SPM1, SPM2) uses its related Angle of Attack (AOA1, AOA2) transducer angle input for stick shaker calculations. The Stall Protection System (SPS) uses an average of the two Angle of Attack (AOA1, AOA2) transducer angle inputs for the stick pusher calculations.

The stall operating angle of the stick shaker is set to a relatively lower angle of attack when in icing conditions. On the accident aircraft, the Stall Protection System (SPS) receives icing condition status data from the selection of the INCR position of the REF SPEEDS switch on the ICE PROTECTION panel. When the REF SPEEDS switch is in the INCR position, the Electronic Instrument System (EIS) shows an INCR REF SPEEDS message.

1.4.2 Lateral Control System Description

The ailerons and roll spoilers provide roll control of the aircraft in flight. The pilot or copilot supplies roll commands to the aileron control system by turning the handwheels. Roll input commands are mechanically transmitted from the pilot's and copilot's handwheels to the aileron surfaces through the aileron control system. The aileron system transmits the roll commands from the pilot's and copilot's control handwheels to the aileron surfaces through a series of quadrants, cables, levers and pushrods. Movement of the control handwheels causes the aileron surfaces to deflect asymmetrically and in proportion to control handwheel rotation. The aileron system also has inputs from the Auto Flight Control System (AFCS) and the Aileron Trim and Centering Unit. The Automatic Flight Control System (AFCS) also gives roll commands, through the autopilot servo connected to the aileron forward quadrant located below the flight compartment floor.

The roll spoilers are a secondary flight control system. They are hydraulically powered and operate with, and in proportion to, the aileron control system to give lateral control of the aircraft in flight. The roll spoilers also decrease the lift made by the wings on landing. There are two hydraulically powered roll spoilers on each wing. Rotary movement of either the pilot's or the copilot's control handwheels operates the ailerons and the spoilers at the same time through an interconnect rod joining the two control columns. The ailerons and the roll spoilers can be disconnected from each other if a jam occurs in either system. The aircraft can then be operated with limited roll control by using the unjammed system.

The pilot's control handwheel operates the spoiler control circuit and the copilot's control handwheel operates the aileron control circuit. The control handwheels are connected to each other so that either control handwheel operates both circuits at the same time. This lets the aircraft be flown from either the pilot's or copilot's position. If either control circuit becomes jammed, the ROLL DISC handle is pulled to disconnect the aileron system from the roll spoiler system. The pilot with the unjammed control handwheel maintains roll control of the aircraft.

1.4.3 Directional Control System Description

The rudder system transmits the yaw commands from the pilot's and copilot's rudder pedals to the rudder through a series of quadrants, cables, levers and pushrods. Movement of the rudder pedals is transmitted to two hydraulic Power Control Units (PCUs). The PCUs move the rudder in proportion to the amount of rudder pedal input. The rudder system also has inputs from the Automatic Flight Control System (AFCS) and the rudder trim actuator.

The rudder feel and trim unit gives artificial feel to the rudder pedals during operation. Because the rudder system is a powered flight control, the unit is used to prevent the pilot from overcontrolling the aircraft in flight.

The rudder trim actuator gives the pilot trim control around the yaw axis of the aircraft in flight. Rudder trimming biases the complete rudder system, so that a newly trimmed position is sensed by the pilot as the neutral position.

1.4.4 Accident Scene Flight Control System Observations

Flight control continuity could not be determined from the wreckage due to the severe fragmentation and burn damage. The rudder and elevator PCU’s were examined, and no abnormalities were noted.

1.5 Automatic Flight Guidance Control System

The Automatic Flight Control System (AFCS) does the following functions:
- Flight Director (FD)
- Autopilot (AP)
- Tactile Control Steering (TCS)
- Automatic pitch trim
- Yaw dampening (YD).

Two Flight Guidance Modules (FGM1, FGM2) operate independently to make calculations and control the following systems:
- FD
- AP and YD
- Automatic pitch trim.

The Flight Director provides guidance to the flight crew in the form of command bars and mode annunciations on the Primary Flight Displays. The guidance commands are identical whether the Autopilot is engaged or not and as such may be flown manually or simply monitored when operating with the Autopilot engaged. Each FGM can independently calculate the FD commands but two FGMs are necessary to do the AP and YD functions. FGM1 supplies the actual commands to the AP and YD actuators and FGM2 monitors the commands and their operation.

The FGM's function as a master and slave in the Flight Director (FD) mode. The FGM1 is master and FGM2 is slave. (The FGM2 slaves to the FGM1 FD modes.) If FGM1 malfunctions, FGM2 automatically becomes the master. One FGM is required for the FD function. If one FGM malfunctions, the autopilot cannot be engaged.

The Autopilot (AP) moves the flight control surfaces for automatic control of the aircraft flight path.

The autopilot is disengaged by the following selections:
- AP pushbutton switch on the FGCP AP
- YD pushbutton switch on the FGCP
- AP disengage pushbutton switch on the handwheel assemblies
- Manual pitch trim switch on the handwheel assemblies
- Go Around pushbutton switch on the power levers

The autopilot is also disengaged by the one of the following conditions:
- AHRS1 or AHRS2 has malfunctioned
- AHRS1 and AHRS2 parameters disagree
- ADC1 or ADC2 has malfunctioned

- ADC1 and ADC2 parameters disagree
- The aircraft is not airborne
- The AP or YD pushbutton switch on the FGCP is pushed for manual disengagement
- The manual pitch trim selection when the TCS mode is not active (manual disengagement)
- The control column or handwheel is used to manually override AP
- The AP disengage switch on the handwheel is pushed for a manual disengagement
- The TCS malfunctions
- A stall warning condition
- A GA pushbutton switch on a power lever is pushed (manual disengagement)
- An AP actuator failure is sensed
- An automatic Yaw Damper disengagement
- Internal AFCS monitoring has malfunctioned
- A long power interruption
- The aircraft attitude is outside of its limits.

The autopilot has a visual and aural disengagement warning. In the event of an automatic autopilot disengagement, two red AP disengage warning lights located on the glareshield come on and a continuous 4000 Hz aural tone sounds. The AP disengage warning lights flash and the tone sounds until the AP pushbutton switch on the FGCP is pushed or an AP disengage pushbutton switch on a handwheel assembly is pushed. The AP disengage warning lights then stay on steady for five seconds before they go out

When the autopilot is manually disengaged, an AP DISENGAGED or AP/YD DISENGAGED message on the PFD comes into view steady for 5 seconds and a 1.5 second aural tone sounds. A manual AP disengage condition does not cause the AP disengage warning lights to come on.

Automatic Pitch Trim: The AFCS automatic pitch trim function does the following functions:

- Autopilot pitch trim when the AP is engaged
- Flap auto pitch trim when the AP is not engaged and the flaps are moved.

Autopilot Pitch Trim: When the autopilot mode is engaged, the AFCS commands pitch trim to decrease the mistrim control column force held by the AP pitch servo to make sure that the pitch transient at AP disengagement is minimal. According to Bombardier, the maximum pitch transient control force that could have existed for the accident flight at the autopilot disengagement flight conditions would have been 11.8 lbs. This force level would only have been present if the autopilot servo was holding its maximum torque level just prior to the disconnection.

The flap auto pitch trim function automatically engages when the following conditions are valid:
- The aircraft is airborne for two seconds or more
- CAS is less than 180 kt (334 km/h)

- The autopilot is not engaged
- No manual pitch trim selection
- The flaps are moving and between the 15 and 35 degree detents.

Scott Warren
Lead Aerospace Engineer