Docket No. SA-531

Exhibit No. 13-A

NATIONAL TRANSPORTATION SAFETY BOARD

Washington, D.C.

Aircraft Performance Group Chairman

Crash Site Factual

(86 Pages)

NATIONAL TRANSPORTATION SAFETY BOARD
Office of Research and Engineering
Washington, D.C. 20594

April 24, 2009

Aircraft Performance Crash Site Factual

I. ACCIDENT

NTSB Number:	DCA09MA027
Location:	Clarence Center, New York
Date:	February 12, 2009
Time:	2217 Eastern Standard Time (EST)
Aircraft:	Bombardier DHC-8-400 (N200WQ)
Operator:	Colgan Air, Inc.

II. AIRCRAFT PERFORMANCE GROUP

Chairman	Kevin J. Renze, Ph.D. Vehicle Performance Engineer Office of Research and Engineering National Transportation Safety Board Washington, D.C.
Members	Bob MacKenzie Senior Production Test Pilot Toronto Flight Operations Bombardier Aerospace Downsview, Ontario, Canada
Member	Chad J. Balentine Staff Engineer Engineering and Air Safety Department Air Line Pilots Association, Int'l. Herndon, VA
Member	Michael Muratore, P.E. Flight Test Engineer Federal Aviation Administration New York Aircraft Certification Office Westbury, NY
Member	Robert Henriksen Engineering Colgan Air, Inc. Manassas, VA

1.0 INTRODUCTION

On February 12, 2009, about 2217 Eastern Standard Time (EST), a Colgan Air Inc., Bombardier DHC-8-400, N200WQ, d.b.a. Continental Connection flight 3407, crashed during

an instrument approach to runway 23 at the Buffalo-Niagara International Airport (BUF), Buffalo, New York. The crash site was approximately 5 nautical miles northeast of the airport in Clarence Center, New York, and mostly confined to one residential house. The four flight crew and 45 passengers were fatally injured and the aircraft was destroyed by impact forces and post crash fire. There was one ground fatality. Night visual meteorological conditions prevailed at the time of the accident. The flight was a *Code of Federal Regulations* (CFR) Part 121 scheduled passenger flight from Liberty International Airport (EWR), Newark, New Jersey to BUF.

The aircraft performance group[1] convened on the afternoon of February 13, 2009 and visited the accident site on February 13-15 to document aircraft flight path witness marks, the airframe heading, the location of standing trees and structures, and the available surveillance video evidence. Available radar, flight data recorder, cockpit voice recorder, weather, operational, and aircraft performance data were also identified.

2.0 FACTUAL EVIDENCE

2.1 Aircraft Engineering Drawing

A three-view engineering drawing for the Bombardier DHC-8-400 aircraft is provided in Attachment 1.

2.2 Accident Site

The aircraft wreckage was located in a residential neighborhood, largely contained within the property lot described as 6038 Long St., Clarence Center, NY.[2] The N200WQ airframe was located at approximately N43° 0' 41.781697" latitude, W078° 38' 20.121384" (see Figure 1). The aircraft was observed on a northeasterly heading of approximately 65° true, based on the extended longitudinal axis of the empennage wreckage. Several aircraft components were observed in the rear garage area of the adjacent property lot to the south.

The group performed a survey of the accident site and surrounding areas, concentrating on witness mark evidence (and lack thereof) on trees and structures. Two confirmed tree strikes are documented in Figure 2. Position data were recorded with a handheld Garmin etrex Vista Global Positioning System (GPS) device. Digital photographs[3] were taken of the site and the intact aircraft wreckage, including panoramic views of the surrounding area. The photograph and GPS position data logs are provided in Attachments 2 and 3, respectively.

The team made the following on-scene observations:

1. The wreckage was contained in a markedly small footprint area (see Figure 1).
2. The empennage was virtually intact, exhibiting very little damage to the structure. Minor skin damage was observed on the lower side of the left horizontal stabilizer and to the left vertical stabilizer side skin.
3. Collateral damage to surrounding trees, brush and structure was minimal, with the exception of the aforementioned tree strikes and adjacent lot rear garage structure.

---

[1] The FAA and Colgan Air, Inc. representatives joined the aircraft performance group on February 14, 2009 and April 21, 2009, respectfully.
[2] The existing residence at 6038 Long St., Clarence Center, NY was destroyed by the aircraft impact and a post-impact fire.
[3] The majority of photographs were taken with a Canon PowerShot SX100 IS digital camera.

Figure 1: The N200WQ wreckage was located within the approximate illustrated perimeter (see distance scale embedded in image). North is toward the top of the photograph.

Figure 2: The N200WQ empennage (left) and tree strikes (center). View looking southeast.

2.3 Radar Data

Radar data from the ASR-9 radar at Buffalo, NY (BUF) were secured by the Air Traffic Control Group for the accident flight.[4] The radar facility parameters for BUF are shown in Table 1. The tabulated radar data are located in Attachment 4.

Table 1: Radar facility parameters

Identifier	Location	Equipment Type	Latitude	Longitude	Elevation (feet)	Magnetic Variation
BUF	Buffalo, NY	ASR-9	N42-56-26.78	W078-44-09.00	714.2	W10

2.4 Flight Data Recorder and Cockpit Voice Recorder Data

The available flight data recorder (FDR) and cockpit voice recorder (CVR) data are documented in the Flight Data Recorder Group Chairman's Factual Report and the Cockpit Voice Recorder Group Chairman's Factual Report, respectively.

2.5 Weight and Balance

The component weight buildup method was used to estimate the flight 3407 landing weight. The preliminary on-scene flight 3407 landing weight estimate (detailed in Table 2 below) was about 55,000 pounds, based on the planned flight release weight data, which were adjusted downward for actual passengers onboard.[5]

Table 2: Preliminary on-scene estimate of flight 3407 landing weight

Item or Load Component	Pounds
Aircraft operating weight	39,824
Fuel weight	8,000
ACM and JS	195
Payload (passengers and cargo)	9,900
Ramp weight	**57,919**
Taxi fuel	300
Takeoff weight	**57,619**
Fuel burn	2,576
Estimated landing weight	**55,043**

The Operations Group Factual Report, Section 3.1 contains the flight 3407 weight and balance data that were computed by Colgan Air, Inc. and available to the flight crew. The estimated landing weight was 54,366 pounds. The Operations Group calculated that the landing weight expected for computations consistent with OpSpec A099 was 54,306 pounds. The flight crew actually made a Landing Data Request to the Aerodata Compute Server

[4] According to the Air Traffic Control Group Chairman's Factual Report, radar data for this accident were obtained from the STARS radar data processing system connected to the ASR-9 sensor located on the Buffalo airport.
[5] The flight 3407 preliminary landing weight estimate was based on the planned passenger count of 71 persons, adjusted for 44 actual passengers, assuming a weight allowance of 225 pounds per person, including baggage and personal items.

System for an estimated landing weight of 54,700 pounds using the Aircraft Addressing and Reporting System (ACARS).

The Bombardier DHC-8-400 weight and balance envelope and the flight 3407 fuel receipt from EWR are provided in Attachments 5 and 6, respectively. A summary of investigative records relevant to the flight 3407 weight and balance is provided in Table 3.

Table 3: Records relevant to flight 3407 weight and balance

Record	**Location**
Bombardier DHC-8-400 weight and balance envelope	Attachment 5
EWR fuel receipt	Attachment 6
Dispatch release and weather packet	Meteorology Attachment 2: Dispatch Release/Weather Document
Calculated weight and balance	Operations Group Factual Report
ACARS data	Operations 2V – ACARS Report
Calculated takeoff and landing performance data	Operations 2W – Aerodata Report
Colgan Air Load Report Worksheet	Operations 2X – Colgan Air Load
Airplane empty weight	Maintenance Records Attachment 4 – Weight and Balance Summary

2.6 Airspeed Limitations

The Bombardier DHC-8-400 airspeed limitations, reference stall speeds, and factored stall speeds are documented in Attachment 7.

2.7 Weather

The Meteorological Factual Report documents the current weather at the time of the accident. For convenient reference, the content in this section was excerpted from the Meteorological Factual Report and reproduced:

02/12/09 22:15:31 5-MIN KBUF 130315Z 25014KT 3SM -SN BR FEW011 OVC021 01/M01 A2980 840 92 -600 260/14 RMK AO2 P0001

The KBUF observation at 2215 EST indicated wind from 250 degrees at 14 knots, visibility 3 miles in light snow and mist, a few clouds at 1,100 feet, ceiling overcast at 2,100 feet, temperature 1 °C, dew point –1 °C, altimeter 29.80 inches of Hg, pressure altitude 840 feet, relative humidity 92 percent, density altitude 600 feet below sea level, magnetic winds from 260 degrees at 14 knots. Remarks: automated observation system, hourly precipitation 0.01 inches.

The 1-minute data for KBUF at 2217 EST indicated an average 2-minute wind from 243 degrees at 13 knots with a peak wind from 248 degrees at 16 knots, with an RVR on runway 23 of more than 6,000 feet.

2.8 Operational Data

The approach plate for the Buffalo ILS 23 approach and the Colgan Air normal checklist are documented in the Operations Group Factual Report and attachment Operations 2Y - Normal Checklist, respectively.

2.9 Surveillance Video Data

The aircraft performance group met with the president of the Clarence Center Volunteer Fire Company, Inc. (Clarence Center Fire) and confirmed that several exterior fire department surveillance cameras captured evidence of the flight 3407 ground impact timing and the post-impact fire. The president indicated that digital copies of the archived camera footage could be provided for each camera, together with a native software application that would enable image review capability.[6]

Clarence Center Fire has a 24-hour video surveillance system installed, including nine exterior SPECO–Intensifier Series HT-INTB8 cameras, which use intensified ambient lighting in the image capture process. The exterior camera positions and orientations are stationary. The cameras do support zoom in/out, but this must be accomplished manually.

Camera footage is digitally recorded on a SPECO DVR-16TN/800 digital video recorder at a frame rate of 1 Hz and archived for 24 days. Recorded images contain an embedded time imprint. Comparison to a GPS clock indicated that the recorded image times were offset from the actual time by about 16 minutes, 0 seconds.

The observed exterior camera positions and lines of sight are:

Camera	Location and Line of Sight
1	Southwest Corner of Building – Looking Southwest along South Wall
2	Midpoint of East Wall – Looking Southeast towards Entrance
3	North of Midpoint along East Wall – Looking East towards Parking Lot
4	Northeast Corner of Building – Looking East towards Parking Lot
5	Midpoint of North Wall – Looking Northeast towards Driveway
6	Midpoint of North Wall – Looking Northwest towards Driveway
7	Midpoint of West Wall – Looking West towards Parking Lot
8	Midpoint of West Wall – Looking Southwest towards Parking Lot
9	Above the West Wall Entrance – Looking West towards Parking Lot

At approximately 10:16:43 p.m. on February 12, 2009, camera 5 shows what appears to be the reflection of a green light in the top left corner of the recording that lasts for 1 frame (approximately one second). About 3 seconds later there appears to be a reflection of light from the aircraft post-impact initial and secondary explosions. The image sequence[7] from cameras 3 and 5 in the proximity of the flight 3407 ground impact are shown in Attachment 8. The elapsed time between images is approximately 1 second.

[6] Enhanced image reviewing capability is not available with the native software application, but may be available if the images are imported in certain third party software applications.

[7] Each camera image sequence presented in Attachment 8 begins with a reference camera field of view image in daylight conditions and progresses in sequence from a start time 10 seconds before the event to an end time 10 seconds after the event,

Clarence Center Fire provided the following additional data to the aircraft performance group:

1. A plan view drawing of the Clarence Center Fire department facility.
2. Native format copies of each exterior video camera feed (9 cameras total), starting 20 minutes prior to the event and ending 20 minutes after the event.
3. Native format copies of each exterior video camera feed (9 cameras total) for a period of 1 minute during daylight hours for cross-referencing purposes.
4. A copy of the digital video native viewer application.

According to Clarence Center Fire witnesses, the first responder time of arrival sequence was:

1. Clarence Center Fire
2. Niagara Frontier Transportation Authority Police (Airport Police)
3. Eire County Sheriff Department
4. New York State Police (NYSP)
5. Clarence Fire Company
6. Swormville Fire Company
7. East Amherst Fire Department

All of the responding organizations listed were reported to be represented on-scene within 15 minutes of the accident.

2.10 Bombardier DHC-8-400 Stall Warning and Stick Pusher System

The Bombardier DHC-8-400 maintenance manual general systems description for the stall warning and stick pusher system is provided in Attachment 9.

Bombardier DHC-8-400 maintenance manual general systems description errata: At the bottom of page 4 (see Attachment 9, page A9.5), the manual currently states:

> *The stall operating angle of the stick shaker and stick pusher is set to a relatively lower angle of attack when in icing conditions. The Stall Protection System (SPS) receives icing condition status data from the selection of the propeller anti-ice switch. On aircraft with Mod 4Q126089, the Stall Protection System (SPS) receives icing condition status data from the selection of the INCR position of the REF SPEEDS switch on the ICE PROTECTION panel.*

Correction: The stall operating angle of the stick shaker ~~and stick pusher~~ is set to a relatively lower angle of attack when in icing conditions.

Explanation: The scheduled angle of attack (AOA) is lowered for stick shaker initiation but not stick pusher initiation with the selection of the INCR position of the REF SPEEDS switch on the ICE PROTECTION panel.

Attachment 1: Bombardier DHC-8-400 3-View Drawing

0.3 PLAN VIEW DHC 8-Q400 SERIES

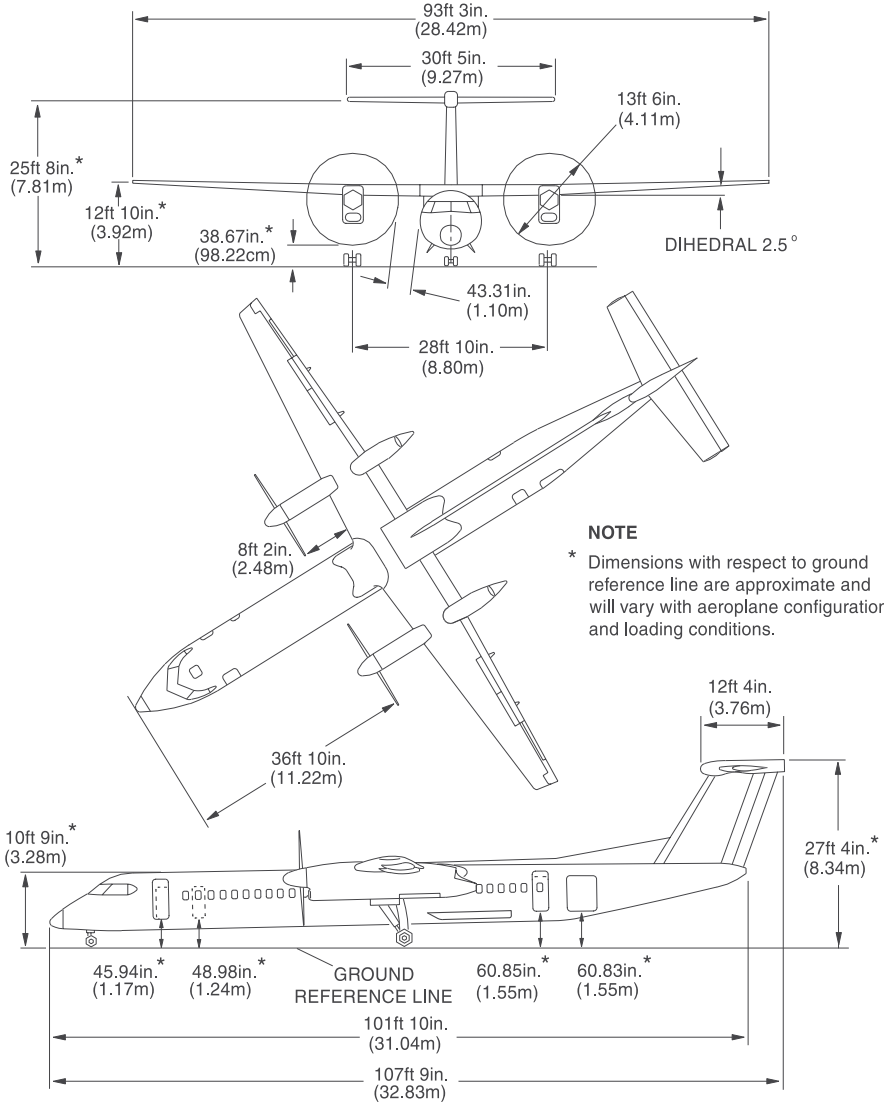

Supplied by Jeppesen Sanderson
© BOMBARDIER INC., 1999. ALL RIGHTS RESERVED

Attachment 2: Log of Photographs

Note: Requests for digital images should be forwarded to the National Transportation Safety Board, Office of Records Management

Photo	Description	Photo Name	Camera
1	Panoramic View- Facing North	IMG_1788	Canon PowerShot SD800IS
2	Panoramic View- Facing North-Northeast	IMG_1789	Canon PowerShot SD800IS
3	Panoramic View- Facing Northeast	IMG_1790	Canon PowerShot SD800IS
4	Panoramic View- Facing East	IMG_1791	Canon PowerShot SD800IS
5	Panoramic View- Facing East-Southeast	IMG_1792	Canon PowerShot SD800IS
6	Panoramic View- Facing Southeast	IMG_1793	Canon PowerShot SD800IS
7	Panoramic View- Facing South-Southeast	IMG_1794	Canon PowerShot SD800IS
8	Panoramic View- Facing South	IMG_1795	Canon PowerShot SD800IS
9	Panoramic View- Facing South-Southwest	IMG_1796	Canon PowerShot SD800IS
10	Panoramic View- Facing Southwest	IMG_1797	Canon PowerShot SD800IS
11	Panoramic View- Facing West-Southwest	IMG_1798	Canon PowerShot SD800IS
12	Panoramic View- Facing West	IMG_1799	Canon PowerShot SD800IS
13	Panoramic View- Facing West-Northwest	IMG_1800	Canon PowerShot SD800IS
14	Panoramic View- Facing Northwest	IMG_1801	Canon PowerShot SD800IS
15	Panoramic View- Facing North-Northwest	IMG_1802	Canon PowerShot SD800IS
16	Panoramic View- Facing South-Southwest (Different View)	IMG_1803	Canon PowerShot SD800IS
17	Tree Southeast of Site with Broken Limb (Zoomed in on Break)	IMG_1804	Canon PowerShot SD800IS
18	Tree Southeast of Site with Broken Limb	IMG_1805	Canon PowerShot SD800IS
19	Tree Southeast of Site with Broken Limb (Focus on Limbs)	IMG_1806	Canon PowerShot SD800IS
20	Tree Southeast of Site with Broken Limb (Focus on Missing Bark)	IMG_1807	Canon PowerShot SD800IS
21	Clarence Center Fire Department North and Northeast Sides	IMG_1808	Canon PowerShot SD800IS
22	Clarence Center Fire Department North and Northwest Sides	IMG_1809	Canon PowerShot SD800IS
23	Camera #1 Installation	IMG_1810	Canon PowerShot SD800IS
24	Camera #1 Approximate Field of View	IMG_1811	Canon PowerShot SD800IS
25	Camera #2 Installation	IMG_1812	Canon PowerShot SD800IS
26	Camera #2 Approximate Field of View	IMG_1813	Canon PowerShot SD800IS
27	Camera #3 Installation	IMG_1814	Canon PowerShot SD800IS
28	Camera #3 Approximate Field of View	IMG_1815	Canon PowerShot SD800IS
29	Camera #4 Installation	IMG_1816	Canon PowerShot SD800IS
30	Camera #4 Approximate Field of View	IMG_1817	Canon PowerShot SD800IS
31	Camera #5 Installation	IMG_1818	Canon PowerShot SD800IS
32	Camera #5 Approximate Field of View	IMG_1819	Canon PowerShot SD800IS
33	Camera #6 Installation	IMG_1820	Canon PowerShot SD800IS
34	Camera #6 Approximate Field of View	IMG_1821	Canon PowerShot SD800IS
35	Camera #7 Installation	IMG_1822	Canon PowerShot SD800IS
36	Camera #7 Approximate Field of View	IMG_1823	Canon PowerShot SD800IS
37	Camera #8 Installation	IMG_1824	Canon PowerShot SD800IS
38	Camera #8 Approximate Field of View	IMG_1825	Canon PowerShot SD800IS
39	Camera #9 Installation	IMG_1826	Canon PowerShot SD800IS
40	Camera #9 Approximate Field of View	IMG_1827	Canon PowerShot SD800IS
41	General Site Facing West on South Edge of Site	IMG_2137	Canon PowerShot SX100IS
42	General Site Facing West on Midpoint of Site	IMG_2138	Canon PowerShot SX100IS
43	General Site Facing West on North Edge of Site	IMG_2139	Canon PowerShot SX100IS
44	General Site Facing West North of Site	IMG_2140	Canon PowerShot SX100IS
45	House North of Site (6044 Long St) Facing West South Edge	IMG_2141	Canon PowerShot SX100IS

46	House North of Site (6044 Long St) Facing West North Edge	IMG_2142	Canon PowerShot SX100IS
47	Accident Site Facing West	IMG_2143	Canon PowerShot SX100IS
48	House South of Site (6032 Long St) Facing West North Edge	IMG_2144	Canon PowerShot SX100IS
49	House South of Site (6032 Long St) Facing West Midpoint	IMG_2145	Canon PowerShot SX100IS
50	House South of Site (6032 Long St) Facing West South Edge	IMG_2146	Canon PowerShot SX100IS
51	Rear of House South of Site (6032 Long St) Facing Northeast - South and West Sides	IMG_2147	Canon PowerShot SX100IS
52	Rear of House South of Site (6032 Long St) Facing East - North Side	IMG_2148	Canon PowerShot SX100IS
53	Rear of House South of Site (6032 Long St) Facing East - North Side (Zoomed in on Damaged Structure)	IMG_2149	Canon PowerShot SX100IS
54	Rear of Site South of Site (6032 Long St) Facing North - View of Trees Midpoint	IMG_2150	Canon PowerShot SX100IS
55	Rear of Site South of Site (6032 Long St) Facing North - View of Trees Looking Left	IMG_2151	Canon PowerShot SX100IS
56	Rear of Site South of Site (6032 Long St) Facing North - View of Damaged Trees Looking Right	IMG_2152	Canon PowerShot SX100IS
57	Rear of Site South of Site (6032 Long St) Facing East - North Side (Zoomed in on Damaged Structure)	IMG_2153	Canon PowerShot SX100IS
58	Rear of Site South of Site (6032 Long St) Facing North - View of Upper Empennage- Zoomed	IMG_2154	Canon PowerShot SX100IS
59	Rear of Site South of Site (6032 Long St) Facing North - View of Upper Empennage	IMG_2155	Canon PowerShot SX100IS
60	Rear of Site South of Site (6032 Long St) Facing North - View of Aft Empennage	IMG_2156	Canon PowerShot SX100IS
61	View of Edge of Right Horizontal Stabilizer and Damaged Tree - Facing East	IMG_2157	Canon PowerShot SX100IS
62	View of Edge of Right Horizontal Stabilizer and Damaged Tree - Facing West	IMG_2158	Canon PowerShot SX100IS
63	View of Front of Empennage and Damaged Tree - Facing West	IMG_2159	Canon PowerShot SX100IS
64	View of Front of Empennage and Damaged Tree - Zoomed- Facing West	IMG_2160	Canon PowerShot SX100IS
65	View of Front of Empennage - Facing West	IMG_2161	Canon PowerShot SX100IS
66	View of Front of Empennage - Facing West	IMG_2162	Canon PowerShot SX100IS
67	View of Front of Left Horizontal Stab with Speed Tape	IMG_2163	Canon PowerShot SX100IS
68	View of Front of Left Horizontal Stab with Speed Tape	IMG_2164	Canon PowerShot SX100IS
69	View of Front and Right Vertical Stabilizer	IMG_2165	Canon PowerShot SX100IS
70	View of Top of Right Horizontal Stabilizer	IMG_2166	Canon PowerShot SX100IS
71	View of Horizontal Stabilizer and Damaged Tree - Facing West	IMG_2167	Canon PowerShot SX100IS
72	View of Horizontal Stabilizer and Damaged Tree - Facing West	IMG_2168	Canon PowerShot SX100IS
73	View of Upper Left Horizontal Stabilizer with Speed Tape and Damaged Boot	IMG_2169	Canon PowerShot SX100IS
74	View of Upper Left Horizontal Stabilizer with Speed Tape and Damaged Boot - Zoomed	IMG_2170	Canon PowerShot SX100IS
75	View of Upper Left Horizontal Stabilizer with Speed Tape and Damaged Boot - Zoomed	IMG_2171	Canon PowerShot SX100IS
76	View of Lower Left Horizontal Stabilizer with Damage	IMG_2172	Canon PowerShot SX100IS
77	View of Lower Left Horizontal Stabilizer with Damage - Zoomed	IMG_2173	Canon PowerShot SX100IS
78	View of Lower Left Horizontal Stabilizer with Damage	IMG_2174	Canon PowerShot SX100IS
79	View of Lower Left Horizontal Stabilizer with Damage - Zoomed	IMG_2175	Canon PowerShot SX100IS
80	View of Damaged Tree and Right Edge of Horizontal Stabilizer - Facing South	IMG_2176	Canon PowerShot SX100IS
81	Accident Site Facing East	IMG_2177	Canon PowerShot SX100IS
82	Accident Site Facing Southeast	IMG_2178	Canon PowerShot SX100IS
83	Accident Site Facing South	IMG_2179	Canon PowerShot SX100IS
84	Accident Site Facing South including Garage and Vehicle	IMG_2180	Canon PowerShot SX100IS
85	Accident Site Facing Southwest including Burned Tree	IMG_2181	Canon PowerShot SX100IS
86	Accident Site Facing South - Zoomed	IMG_2182	Canon PowerShot SX100IS
87	Tree Canopy Facing South	IMG_2183	Canon PowerShot SX100IS
88	Tree Canopy Facing Southwest	IMG_2184	Canon PowerShot SX100IS
89	Tree Canopy Facing West-Southwest	IMG_2185	Canon PowerShot SX100IS
90	Tree Canopy Facing West	IMG_2186	Canon PowerShot SX100IS
91	View of Aircraft Down the Axis of Aircraft	IMG_2187	Canon PowerShot SX100IS

92	View of Aircraft Down the Axis of Aircraft	IMG_2188	Canon PowerShot SX100IS
93	View of Aircraft Down the Axis of Aircraft	IMG_2189	Canon PowerShot SX100IS
94	View of Wreckage with Empennage in Background - Facing West	IMG_2190	Canon PowerShot SX100IS
95	View of Trees in Rear of House South of Site (6032 Long St) - Facing South	IMG_2191	Canon PowerShot SX100IS
96	View of Trees in Rear of House South of Site (6032 Long St) - Facing South-Southwest	IMG_2192	Canon PowerShot SX100IS
97	View of Trees in Rear of House South of Site (6032 Long St) - Facing West	IMG_2193	Canon PowerShot SX100IS
98	View of Trees in Rear of House South of Site (6032 Long St) - Facing West	IMG_2194	Canon PowerShot SX100IS
99	View of Trees in Rear of House South of Site (6032 Long St) - Facing West	IMG_2195	Canon PowerShot SX100IS
100	View of Trees in Rear of House South of Site (6032 Long St) - Facing West-Northwest	IMG_2196	Canon PowerShot SX100IS
101	View of Trees in Rear of House South of Site (6032 Long St) - Facing Northwest	IMG_2197	Canon PowerShot SX100IS
102	View of Trees in Rear of House South of Site (6032 Long St) - Facing Northwest-North	IMG_2198	Canon PowerShot SX100IS
103	View of Trees in Rear of House South of Site (6032 Long St) - Facing Northwest-North	IMG_2199	Canon PowerShot SX100IS
104	View of Trees in Rear of House South of Site (6032 Long St) - Facing North	IMG_2200	Canon PowerShot SX100IS

Attachment 3: Log of GPS Data

Note: For offsets noted at a corner of a building the offset is at a 45 degree angle to the corner. All others are at 90 degrees to the plane of the structure.

GPS #	Description	Lat	Long
#74	Northern most telephone pole opposite corner of Maple and Long streets	N 43° 00.725	W 78° 38.324
#75	Telephone pole in front of 6044 Long Street (house just north of accident site)	N 43° 00.710	W 78° 38.319
#76	Telephone pole at property line south of accident site and property just to the south of the site	N 43° 00.691	W 78° 38.326
#77	Telephone pole at property line between 6026 and 6020 Long Street	N 43° 00.667	W 78° 38.329
#78	Telephone pole at edge of rear of parking lot of Verizon	N 43° 00.650	W 78° 38.330
#79	Telephone pole on Clarence Center Drive across the street from the corner of Clarence Center and Long	N 43° 00.624	W 78° 38.330
#80	House directly South of Accident Site SE Corner w/10' offset	N 43° 00.681	W 78° 38.340
#81	House directly South of Accident Site SW Corner w/10' offset	N 43° 00.680	W 78° 38.356
#82	House directly South of Accident Site NW Corner w/10' offset	N 43° 00.695	W 78° 38.365
#83	House directly South of Accident Site NW Corner w/10' offset off garage damaged area	N 43° 00.692	W 78° 38.345
#84	House directly South of Accident Site NE Corner w/10' offset off garage front	N 43° 00.693	W 78° 38.343
#85	Accident site garage NE Corner no offset	N 43° 00.704	W 78° 38.353
#86	Accident site garage SE Corner no offset	N 43° 00.698	W 78° 38.356
#87	Accident site garage SW Corner no offset	N 43° 00.697	W 78° 38.365
#88	Accident site garage NW Corner no offset	N 43° 00.704	W 78° 38.364
#89	House to North of site SE Corner w/10' offset	N 43° 00.691	W 78° 38.340
#90	House to North of site SW Corner w/10' offset	N 43° 00.707	W 78° 38.351
#91	House to North of site NW Corner w/10' offset	N 43° 00.717	W 78° 38.350
#92	House to North of site NE Corner w/10' offset	N 43° 00.719	W 78° 38.348
#93	Firehouse SE Corner w/10' offset	N 43° 00.597	W 78° 38.355
#94	Firehouse SW Corner w/10' offset	N 43° 00.603	W 78° 38.389
#95	Firehouse NW Corner w/10' offset	N 43° 00.625	W 78° 38.386
#96	Firehouse NE Corner w/10' offset	N 43° 00.620	W 78° 38.347
#97	Firehouse Camera #1 w/10' offset	N 43° 00.600	W 78° 38.350
#98	Firehouse Camera #2 w/10' offset	N 43° 00.613	W 78° 38.345
#99	Firehouse Camera #3 w/10' offset	N 43° 00.615	W 78° 38.347
#100	Firehouse Camera #4 w/10' offset	N 43° 00.624	W 78° 38.349
#101	Firehouse Cameras #5 & #6 w/10' offset	N 43° 00.624	W 78° 38.368
#102	Firehouse Camera #9 w/10' offset	N 43° 00.617	W 78° 38.385
#103	Firehouse Camera #7 w/10' offset	N 43° 00.613	W 78° 38.379
#104	Firehouse Camera #8 w/10' offset	N 43° 00.615	W 78° 38.383

Attachment 4: Radar Data from BUF ASR-9

Table A4.1: Radar data from BUF ASR-9

SAMPLE	HOURS	MINUTES	SECONDS	PRESSURE ALTITUDE (Feet)	RANGE (N.M.)	ACPS (Counts)
1	2	59	41.801	14900	59.98	1580
2	2	59	46.391	14900	59.62	1582
3	2	59	51.061	14800	59.27	1582
4	2	59	55.661	14700	58.91	1584
5	3	0	0.291	14700	58.56	1584
6	3	0	4.902	14600	58.2	1586
7	3	0	9.562	14600	57.86	1587
8	3	0	14.182	14500	57.5	1588
9	3	0	18.792	14500	57.14	1589
10	3	0	23.422	14400	56.8	1591
11	3	0	28.072	14400	56.44	1591
12	3	0	32.633	14300	56.09	1593
13	3	0	37.292	14300	55.73	1595
14	3	0	41.933	14200	55.39	1595
15	3	0	46.572	14100	55.03	1597
16	3	0	51.163	14100	54.69	1597
17	3	0	55.822	14100	54.33	1600
18	3	1	0.442	14000	53.98	1601
19	3	1	5.063	13900	53.64	1602
20	3	1	9.693	13900	53.28	1603
21	3	1	14.273	13800	52.94	1605
22	3	1	18.913	13800	52.59	1605
23	3	1	23.553	13700	52.25	1608
24	3	1	28.223	13700	51.91	1609
25	3	1	32.803	13600	51.55	1610
26	3	1	37.425	13600	51.2	1611
27	3	1	42.063	13500	50.86	1613
28	3	1	46.664	13500	50.52	1615
29	3	1	51.263	13400	50.17	1617
30	3	1	55.933	13400	49.83	1618
31	3	2	0.544	13300	49.48	1619
32	3	2	5.174	13200	49.14	1621
33	3	2	9.794	13200	48.8	1623
34	3	2	14.414	13100	48.45	1624
35	3	2	19.074	13100	48.12	1627
36	3	2	23.644	13000	47.78	1628
37	3	2	28.324	13000	47.44	1630
38	3	2	32.924	12900	47.09	1632
39	3	2	37.534	12900	46.75	1634
40	3	2	42.134	12800	46.42	1634
41	3	2	46.804	12800	46.08	1637
42	3	2	51.466	12800	45.73	1638
43	3	2	56.044	12700	45.39	1640

44	3	3	0.684	12700	45.06	1642
45	3	3	5.355	12600	44.72	1644
46	3	3	9.945	12600	44.39	1647
47	3	3	14.575	12500	44.05	1648
48	3	3	19.185	12500	43.72	1650
49	3	3	23.825	12400	43.39	1653
50	3	3	28.396	12400	43.05	1654
51	3	3	33.035	12300	42.72	1657
52	3	3	37.665	12300	42.39	1659
53	3	3	42.325	12200	42.06	1661
54	3	3	46.965	12200	41.73	1664
55	3	3	51.575	12100	41.41	1666
56	3	3	56.175	12100	41.08	1667
57	3	4	0.825	12000	40.73	1670
58	3	4	5.446	12000	40.42	1672
59	3	4	10.066	12000	40.09	1674
60	3	4	14.666	11900	39.77	1677
61	3	4	19.326	11900	39.44	1678
62	3	4	23.947	11800	39.11	1681
63	3	4	28.576	11800	38.78	1684
64	3	4	33.216	11700	38.45	1687
65	3	4	37.766	11700	38.12	1689
66	3	4	42.446	11600	37.8	1692
67	3	4	47.086	11600	37.48	1695
68	3	4	51.666	11600	37.16	1699
69	3	4	56.336	11500	36.83	1700
70	3	5	0.906	11500	36.5	1704
71	3	5	5.577	11400	36.17	1708
72	3	5	10.227	11400	35.84	1709
73	3	5	14.867	11300	35.52	1711
74	3	5	19.458	11300	35.16	1713
75	3	5	24.127	11200	34.8	1712
76	3	5	28.747	11200	34.44	1713
77	3	5	33.347	11100	34.08	1712
78	3	5	37.937	11100	33.73	1710
79	3	5	42.577	11000	33.39	1708
80	3	5	47.167	10900	33.06	1705
81	3	5	51.807	10800	32.73	1702
82	3	5	56.427	10700	32.41	1701
83	3	6	1.017	10600	32.08	1697
84	3	6	5.678	10600	31.75	1695
85	3	6	10.268	10500	31.44	1692
86	3	6	14.918	10400	31.11	1689
87	3	6	19.558	10300	30.8	1687
88	3	6	24.118	10200	30.48	1683
89	3	6	28.778	10200	30.17	1681
90	3	6	33.348	10100	29.86	1678
91	3	6	37.988	10000	29.55	1675
92	3	6	42.668	9900	29.23	1673

93	3	6	47.288	9800	28.92	1670
94	3	6	51.918	9700	28.62	1666
95	3	6	56.448	9700	28.33	1663
96	3	7	1.088	9600	28.03	1660
97	3	7	5.689	9500	27.73	1657
98	3	7	10.379	9400	27.45	1655
99	3	7	14.938	9400	27.16	1652
100	3	7	19.569	9300	26.86	1650
101	3	7	24.218	9200	26.58	1647
102	3	7	28.829	9100	26.28	1645
103	3	7	33.439	9000	26.02	1642
104	3	7	38.039	9000	25.72	1639
105	3	7	42.669	8900	25.44	1636
106	3	7	47.269	8800	25.17	1633
107	3	7	51.91	8700	24.89	1630
108	3	7	56.569	8700	24.62	1626
109	3	8	1.131	8600	24.34	1623
110	3	8	5.749	8500	24.08	1619
111	3	8	10.399	8500	23.81	1616
112	3	8	15.059	8400	23.55	1611
113	3	8	19.619	8300	23.28	1607
114	3	8	24.239	8200	23.02	1604
115	3	8	28.91	8100	22.75	1600
116	3	8	33.501	8100	22.48	1596
117	3	8	38.092	8000	22.22	1592
118	3	8	42.779	7900	21.97	1589
119	3	8	47.359	7900	21.7	1582
120	3	8	51.95	7800	21.45	1578
121	3	8	56.499	7700	21.19	1573
122	3	9	1.219	7600	20.94	1568
123	3	9	5.801	7500	20.67	1564
124	3	9	10.411	7500	20.42	1559
125	3	9	15.021	7400	20.17	1554
126	3	9	19.671	7300	19.92	1550
127	3	9	24.291	7200	19.66	1544
128	3	9	28.911	7200	19.42	1539
129	3	9	33.532	7100	19.17	1534
130	3	9	38.151	7000	18.94	1529
131	3	9	42.761	6900	18.7	1523
132	3	9	47.361	6800	18.47	1517
133	3	9	51.973	6800	18.25	1511
134	3	9	56.591	6700	18.03	1505
135	3	10	1.212	6600	17.81	1500
136	3	10	5.882	6500	17.61	1494
137	3	10	10.522	6400	17.39	1488
138	3	10	15.052	6300	17.19	1482
139	3	10	19.696	6300	16.98	1476
140	3	10	24.332	6200	16.78	1469
141	3	10	28.892	6100	16.56	1464

142	3	10	33.522	6000	16.38	1456
143	3	10	38.102	5900	16.17	1449
144	3	10	42.772	5900	15.97	1442
145	3	10	47.352	5800	15.78	1435
146	3	10	51.984	5700	15.59	1428
147	3	10	56.603	5600	15.41	1420
148	3	11	1.262	5500	15.22	1413
149	3	11	5.823	5500	15.05	1405
150	3	11	10.465	5400	14.86	1397
151	3	11	15.063	5300	14.69	1389
152	3	11	19.663	5200	14.5	1380
153	3	11	24.253	5200	14.34	1372
154	3	11	28.893	5100	14.17	1363
155	3	11	33.466	5000	14	1354
156	3	11	38.083	4900	13.84	1345
157	3	11	42.713	4900	13.67	1335
158	3	11	47.313	4800	13.52	1327
159	3	11	51.933	4700	13.36	1316
160	3	11	56.533	4700	13.2	1306
161	3	12	1.163	4600	13.05	1297
162	3	12	5.744	4500	12.89	1286
163	3	12	10.383	4500	12.73	1274
164	3	12	14.954	4400	12.59	1263
165	3	12	19.604	4300	12.44	1251
166	3	12	24.174	4200	12.3	1238
167	3	12	28.814	4200	12.16	1226
168	3	12	33.424	4100	12.03	1213
169	3	12	38.054	4000	11.91	1199
170	3	12	42.604	4000	11.78	1186
171	3	12	47.244	3900	11.67	1172
172	3	12	51.854	3800	11.56	1158
173	3	12	56.434	3700	11.45	1143
174	3	13	1.064	3700	11.34	1130
175	3	13	5.645	3600	11.22	1115
176	3	13	10.275	3500	11.09	1103
177	3	13	14.864	3500	10.97	1088
178	3	13	19.495	3400	10.84	1074
179	3	13	24.105	3300	10.73	1061
180	3	13	28.675	3300	10.62	1047
181	3	13	33.295	3200	10.52	1033
182	3	13	37.905	3100	10.42	1019
183	3	13	42.478	3000	10.33	1004
184	3	13	47.115	2900	10.23	989
185	3	13	51.715	2900	10.16	975
186	3	13	56.315	2800	10.08	960
187	3	14	0.906	2700	10.02	946
188	3	14	5.535	2600	9.95	931
189	3	14	10.196	2600	9.91	915
190	3	14	14.786	2500	9.84	902

191	3	14	19.376	2500	9.81	886
192	3	14	23.967	2500	9.73	872
193	3	14	28.547	2500	9.66	861
194	3	14	33.221	2500	9.56	849
195	3	14	37.796	2400	9.48	837
196	3	14	42.416	2500	9.39	827
197	3	14	47.026	2500	9.31	814
198	3	14	51.636	2400	9.23	804
199	3	14	56.276	2400	9.16	793
200	3	15	0.888	2400	9.06	781
201	3	15	5.47	2400	8.98	769
202	3	15	10.067	2400	8.92	757
203	3	15	14.707	2400	8.84	744
204	3	15	19.337	2500	8.77	730
205	3	15	23.877	2400	8.7	720
206	3	15	28.547	2400	8.59	706
207	3	15	33.117	2400	8.44	696
208	3	15	37.747	2400	8.27	689
209	3	15	42.317	2400	8.08	685
210	3	15	46.957	2400	7.88	681
211	3	15	51.637	2400	7.69	676
212	3	15	56.207	2400	7.48	672
213	3	16	0.797	2400	7.3	667
214	3	16	5.452	2400	7.11	662
215	3	16	10.098	2400	6.92	657
216	3	16	14.658	2400	6.75	653
217	3	16	19.288	2400	6.59	651
218	3	16	23.938	2400	6.44	652
219	3	16	28.56	2400	6.3	652
220	3	16	33.198	2500	6.17	655
221	3	16	37.788	2600	6.08	657
222	3	16	42.368	2200	6.02	650
223	3	16	47.009	1900	5.95	641
224	3	16	51.658	1100	6	630

Attachment 5: Weight and Balance Envelope

2.2 WEIGHT AND LOADING

2.2.1 MAXIMUM STRUCTURAL WEIGHT LIMITS

	Basic Gross Weight MS 4-201539	Intermediate Gross Weight MS 4-308807	High Gross Weight MS 4-308907	Enhanced High Gross Weight MS 4-309238
Ramp Weight	28,077 kg (61,900 lb)	29,089 kg (64,130 lb)	29,347 kg (64,700 lb)	29,665 kg (65,400 lb)
Maximum Take-off Weight	27,987 kg (61,700 lb)	28,998 kg (63,930 lb)	29,257 kg (64,500 lb)	29,574 kg (65,200 lb)
Maximum Landing Weight	27,442 kg (60,500 lb)	28,009 kg (61,750 lb)	28,009 kg (61,750 lb)	28,123 kg (62,000 lb)
Maximum Zero Fuel Weight	25,174 kg (55,500 lb)	25,855 kg (57,000 lb)	25,855 kg (57,000 lb)	26,308 kg (58,000 lb)
Minimum Structural Design Weight	14,403 kg (31,753 lb)	14,403 kg (31,753 lb)	14,403 kg (31,753 lb)	14,403 kg (31,753 lb)

NOTE

Maximum take-off weight and maximum landing weight may be reduced by performance requirements of Section 5.

2.2.2 CENTRE OF GRAVITY LIMITS (LANDING GEAR DOWN)

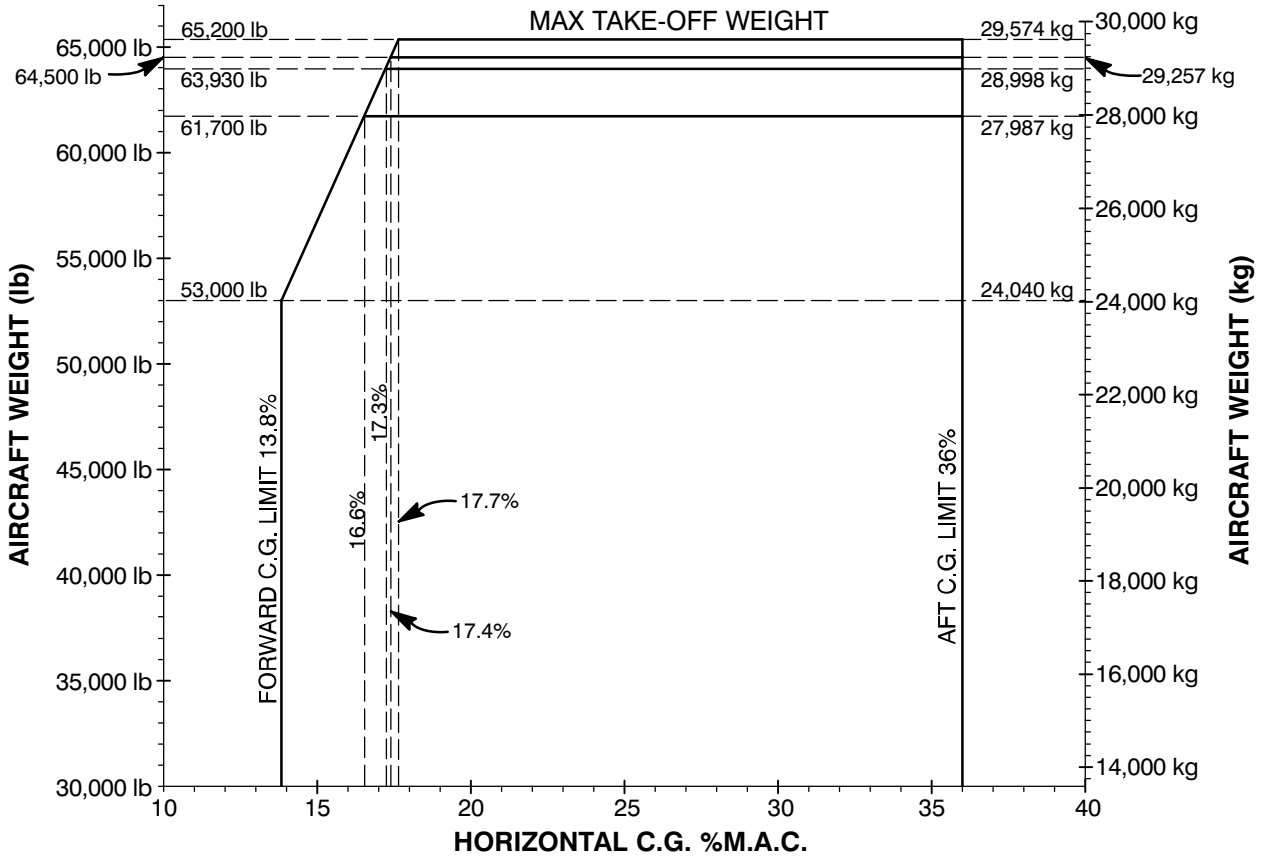

Figure 2—2—1 CG Limits

The Centre of Gravity (C.G.) limits at all weights with landing gear extended are as follows:

1. Forward limit:

   387.16 inches aft of the reference datum (13.8% M.A.C.) for all weights up to 24,040 kg (53,000 lb).

   Slopes from 387.16 inches aft of the reference datum (13.8% M.A.C.) at 24,040 kg (53,000 lb) to 390.84 inches (17.7% M.A.C.) at 29,574 kg (65,200 lb).

2. Aft limit:

   408.14 inches aft of the reference datum (36.0% M.A.C.) at all weights.

If these C.G. limits are met with the airplane landing gear extended, safe limits in flight are automatically achieved (see Figure 2−2−1, CG Limits).

2.2.3 LOADING INSTRUCTIONS

The airplane must always be loaded (i.e. crew, passengers, fuel, freight and baggage) to remain within the weight and centre of gravity limits in paragraphs 2.2.1 and 2.2.2.

Procedures for calculating weight and centre of gravity of a loaded airplane are contained in the Weight and Balance Manual (PSM 1−84−8 or 1−84−8M).

2.2.4 LOADING LIMITS

For baggage compartment loading limits for the various configurations, refer to the Cargo Loading Manual (PSM 1−84−8A).

2.2.5 MANEUVERING LIMIT LOAD FACTORS

The following maneuvering limit load factors limit the permissible angle of bank in turns and limit the severity of pull-up and push-over maneuvers.

Flap retracted	+2.5 g −1.0 g
Flap extended	+2.0 g 0.0 g

2.2.6 MAXIMUM LATERAL ASYMMETRY

Maximum fuel imbalance between contents of main fuel tanks is 272 kg (600 lb).

Attachment 6: EWR Fuel Receipt

ALLIED AVIATION SERVICE CO. OF NEW JERSEY, INC.
FUEL FARM ROAD, BUILDING 116
NEWARK LIBERTY INTERNATIONAL AIRPORT

FUELING F 1870632

DATE

GATE

DEPARTURE TIME

AIRLINE

FLT NO.	A/C NO.	A/C TYPE
7407	734	

SVC. MEN	FUEL REQ'D	TRUCK NO.	PRODUCT
	3.0		

TRUCK METER NUMBER	TRUCK METER READING
END	
START	

GALLONS DELIVERED

X _____ CUSTOMER'S AUTHORIZED REPRESENTATIVE

DESTINATION
710.

TIME OFF A/C

*PRESSURE FUELING CAP CONTROL PANEL ACCESS DOORS CLOSED YES ☑

Attachment 7: Airspeed Limitations

2.4 AIRSPEEDS

2.4.1 AIRSPEED LIMITATIONS

The airspeed limitations and associated definitions are as follows:

NOTE

The airspeed limitations apply to all weights up to 29,574 kg (65,200 lb) gross weight unless otherwise stated.

			KNOTS IAS
1.	Maximum Operating Speed (V_{MO}). This speed limit must not be deliberately exceeded in any regime of flight (climb, cruise or descent) unless a higher speed is authorized for flight test or pilot training. V_{MO} varies linearly between the given altitudes.	0 to 8,000 ft	245
		10,000 ft	282
		18,000 ft	286
		20,000 ft	275
		25,000 ft	248
2.	Flap Extended Speed (V_{FE}).	Flap 5°	200
		Flap 10°	181
		Flap 15°	172
		Flap 35°	158
3.	Maneuvering Speed (V_A). Full application of rudder and aileron controls, and maneuvers that involve angles of attack near the stall, should be confined to speeds below this value.		204

CAUTION

Rapid and large alternating control inputs, especially in combination with large changes in pitch, roll or yaw (eg. large sideslip angles), may result in structural failure at any airspeed, including below V_A.

4.	Landing Gear Operating Speed (V_{LO}). The maximum speed at which it is safe to extend or retract the landing gear.		200
5.	Landing Gear Extended Speed (V_{LE}). The maximum speed at which the airplane can be safely flown with landing gear extended.		215
6.	Rough Air Speed. The maximum airspeed for flight in severe turbulence.		210
7.	Alternate Gear Extension Speed. Under this mode of extension, speed is limited because all wheel well doors remain open after gear is fully down.		185

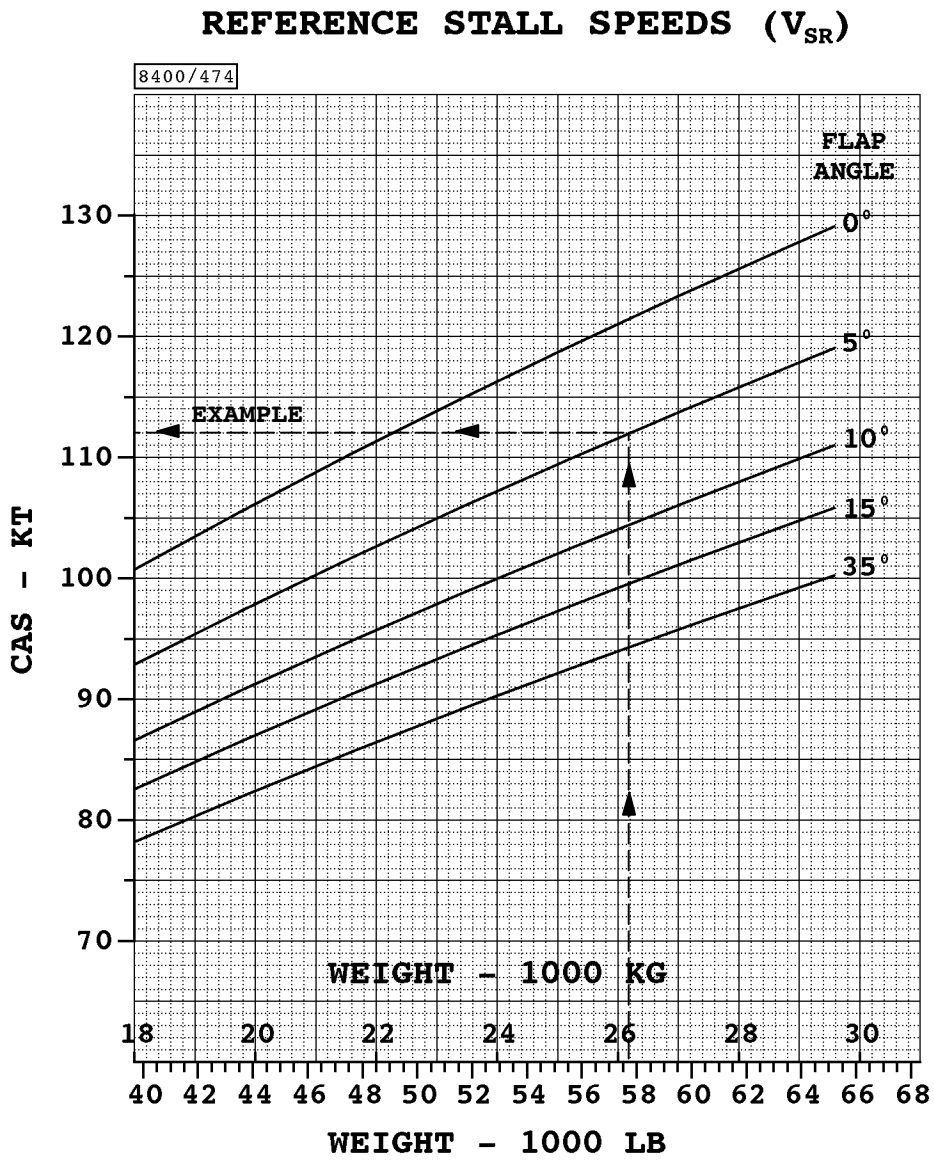
REFERENCE STALL SPEEDS (V_{SR})
8400/474
FLAP ANGLE
0°
5°
10°
15°
35°
EXAMPLE
CAS - KT
130
120
110
100
90
80
70
WEIGHT - 1000 KG
18 20 22 24 26 28 30
40 42 44 46 48 50 52 54 56 58 60 62 64 66 68
WEIGHT - 1000 LB

Figure 5—1—1

SPEEDS: $1.4V_{SR}$, $1.3V_{SR}$, $1.23V_{SR}$ VERSUS WEIGHT
FLAP 0°

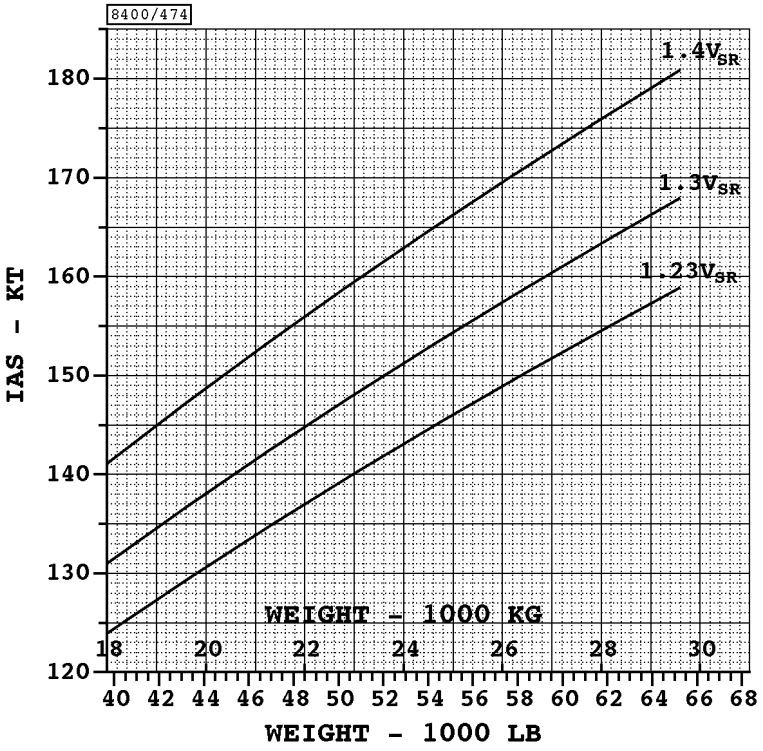

SPEEDS: $1.4V_{SR}$, $1.3V_{SR}$, $1.23V_{SR}$ VERSUS WEIGHT
FLAP 5°

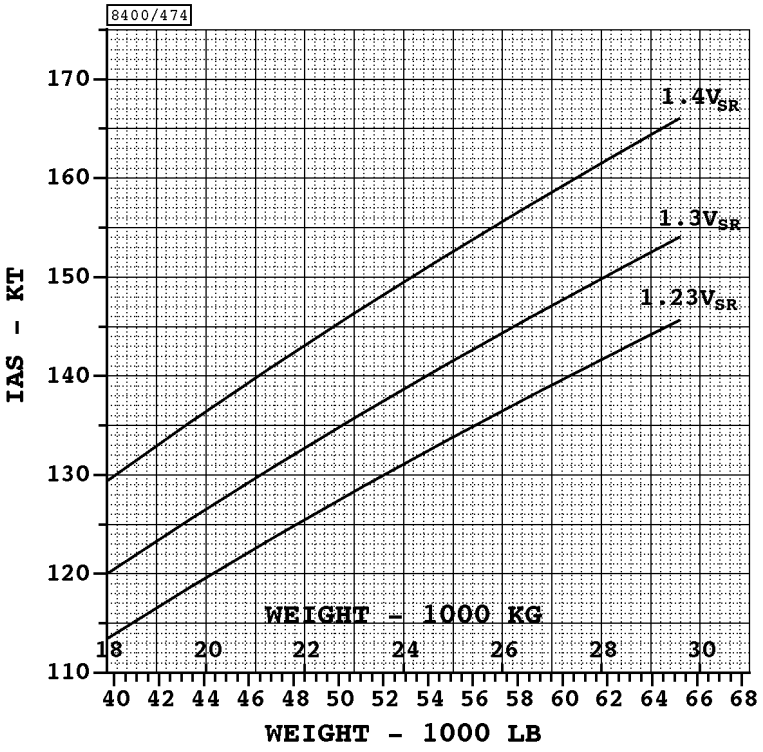

Figure 5—1—2

SPEEDS: $1.4V_{SR}$, $1.3V_{SR}$, $1.23V_{SR}$ VERSUS WEIGHT
FLAP 10°

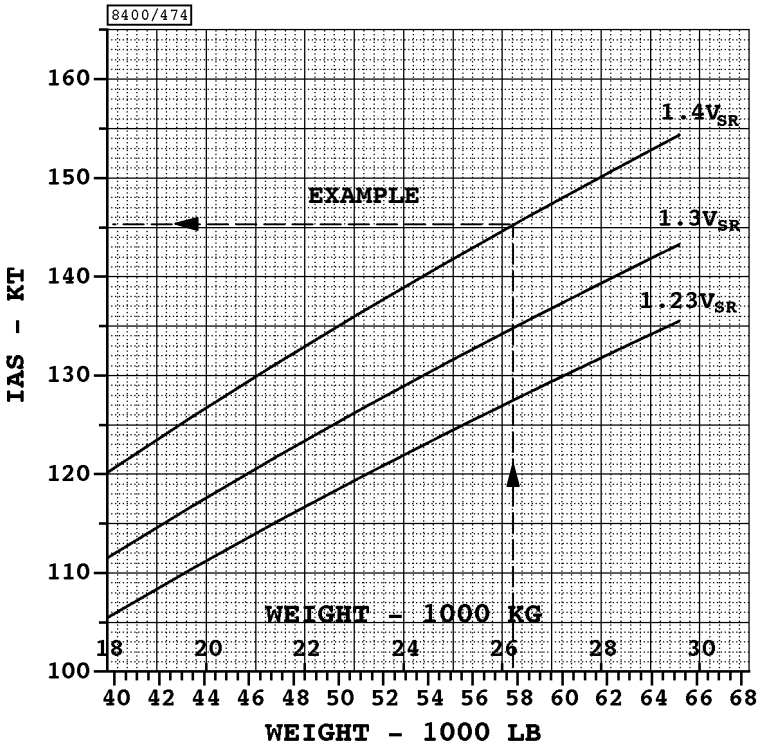

SPEEDS: $1.4V_{SR}$, $1.3V_{SR}$, $1.23V_{SR}$ VERSUS WEIGHT
FLAP 15°

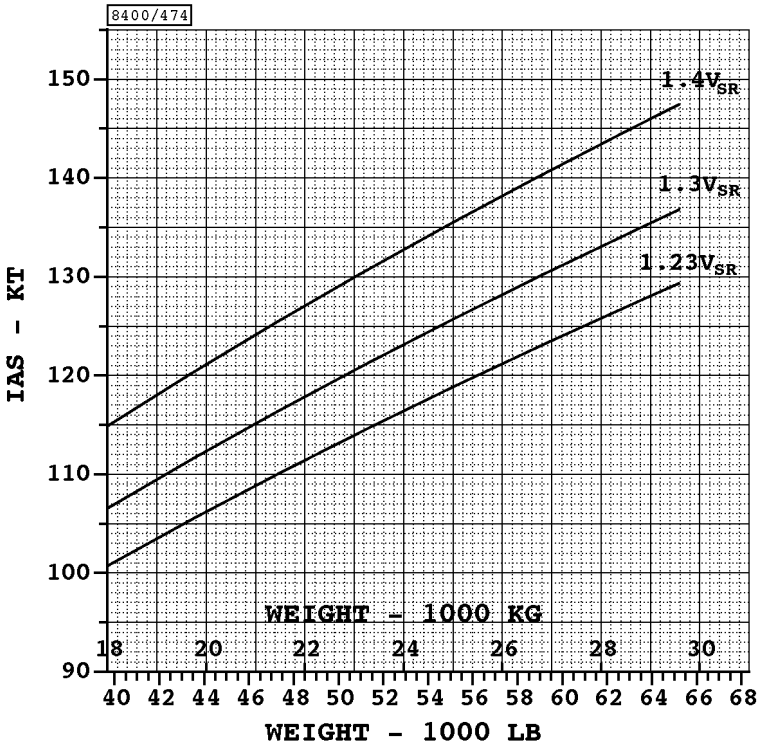

Figure 5—1—3

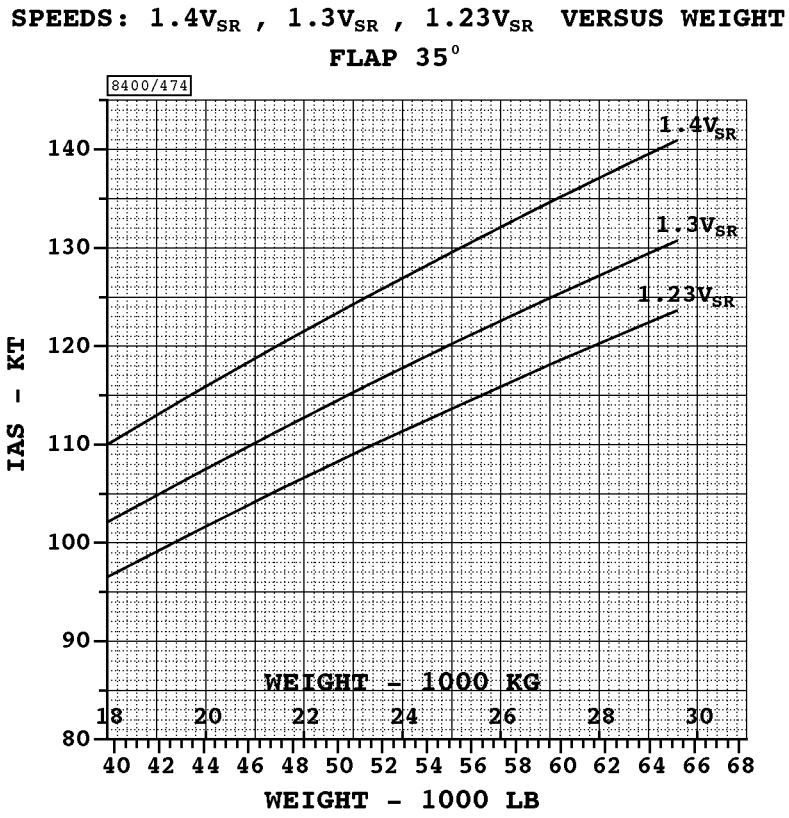
SPEEDS: 1.4VSR , 1.3VSR , 1.23VSR VERSUS WEIGHT
FLAP 35°
8400/474
1.4VSR
1.3VSR
1.23VSR
IAS - KT
140
130
120
110
100
90
80
WEIGHT - 1000 KG
18 20 22 24 26 28 30
40 42 44 46 48 50 52 54 56 58 60 62 64 66 68
WEIGHT - 1000 LB

Figure 5—1—4

ICE PROTECTION PROCEDURES (cont'd)

When the aircraft is aerodynamically clean:

NOTE: The aircraft can be considered aerodynamically clean when all ice is removed from the visible leading edges and wing tips.

REF SPEEDS switch .....OFF

Check [INCR REF SPEED] disappeares on ED.

Minimum airspeed 1.23 V_{SR} flap 0° or Approach and V_{REF} flap 5°, 10° and 15°.

HOLDING, APPROACH AND LANDING IN ICING CONDITIONS (Ice Protection Systems "ON"):

NOTE: When holding in icing conditions flap must be at 0°.

On initial detection of ice:

- Increase Speeds and Landing Field Length as follows:

FLAPS	V_{APP}	V_{GA}	V_{REF}	LFL	HOLDING
0°	+25 kts	+20 kts	+25 kts	-	190 kts MIN
5°	+20 kts	+20 kts	+20 kts	-	-
10°	+20 kts	+20 kts	+20 kts	+25%	-
15°	+20 kts	+20 kts	+20 kts	+25%	-
35°	-	-	+15 kts	+20%	-

AIRFRAME MODE SELECT selector..... FAST
Check WING and TAIL advisory lights illuminate sequentially in pairs.

HOLDING, APPROACH AND LANDING AFTER FLIGHT IN ICING CONDITIONS OR ICING IS NO LONGER DETECTED AND THE ICE DETECTED ADVISORY DISAPPEARES ON ED

Minimum airspeed as above (Holding, Approach and Landing in Icing Conditions).

Continue to cycle boots on FAST until all ice is removed from visible leading edges.

When all ice is removed from visible leading edges:

AIRFRAME MODE SELECT selector.....OFF

NOTE: The aircraft can be considered aerodynamically clean when all ice is removed from the visible leading edges and wing tips.

When the aircraft is aerodynamically clean:

REF SPEEDS switch .....OFF

Minimum Speed.....Vref

4.7.2.4 HOLDING, APPROACH AND LANDING IN ICING CONDITIONS

NOTE

When holding in icing conditions flap must be at 0°.

On initial detection of ice:

1. Airspeed:
   - Minimum holding, 190 kt.
   - Approach Speed 1.23 V_{SR} (Figure 5−1−2) flap 0° + 25 kt.
   - Approach Speed (Figure 5−8−1) flap 5° + 20 kt.
   - Go-around Speed (Figure 5−8−1) flap 5° + 20 kt.
   - Approach Speed (Figure 5−8−2) flap 10° + 20 kt.
   - Go-around Speed (Figure 5−8−2) flap 10° + 20 kt.
   - Approach Speed (Figure 5−8−3) flap 15° + 20 kt.
   - Go-around Speed (Figure 5−8−3) flap 15° + 20 kt.
   - Landing V_{REF} (Figure 5−8−1) flap 10° + 20 kt.
   - Landing V_{REF} (Figure 5−8−2) flap 15° + 20 kt.
   - Landing V_{REF} (Figure 5−8−3) flap 35° + 15 kt.
2. AIRFRAME MODE SELECT selector − FAST. Check WING and TAIL advisory lights illuminate sequentially in pairs.
3. For performance penalty, see Table 5−13−2.
   For performance penalty for landing with abnormal flap (0° or 5°), see Table 5−11−1.

4.7.2.5 HOLDING, APPROACH AND LANDING AFTER FLIGHT IN ICING CONDITIONS

1. Minimum Airspeed − see Para. 4.7.2.4.
2. Continue to cycle boots on FAST until all ice is removed from visible leading edges.

When all ice is removed from visible leading edges:

3. AIRFRAME MODE SELECT selector − OFF.

NOTE

The aircraft can be considered aerodynamically clean when all ice is removed from the visible leading edges and wing tips.

When the aircraft is aerodynamically clean:

4. REF SPEEDS switch − OFF. Check [INCR REF SPEED] disappears on ED.
5. Minimum airspeed 1.23 V_{SR} (Figure 5−1−2) flap 0° or Approach and V_{REF} (Figures 5−8−1 through 5−8−3) flap 5°, 10° and 15°.

Attachment 8: Surveillance Camera Images

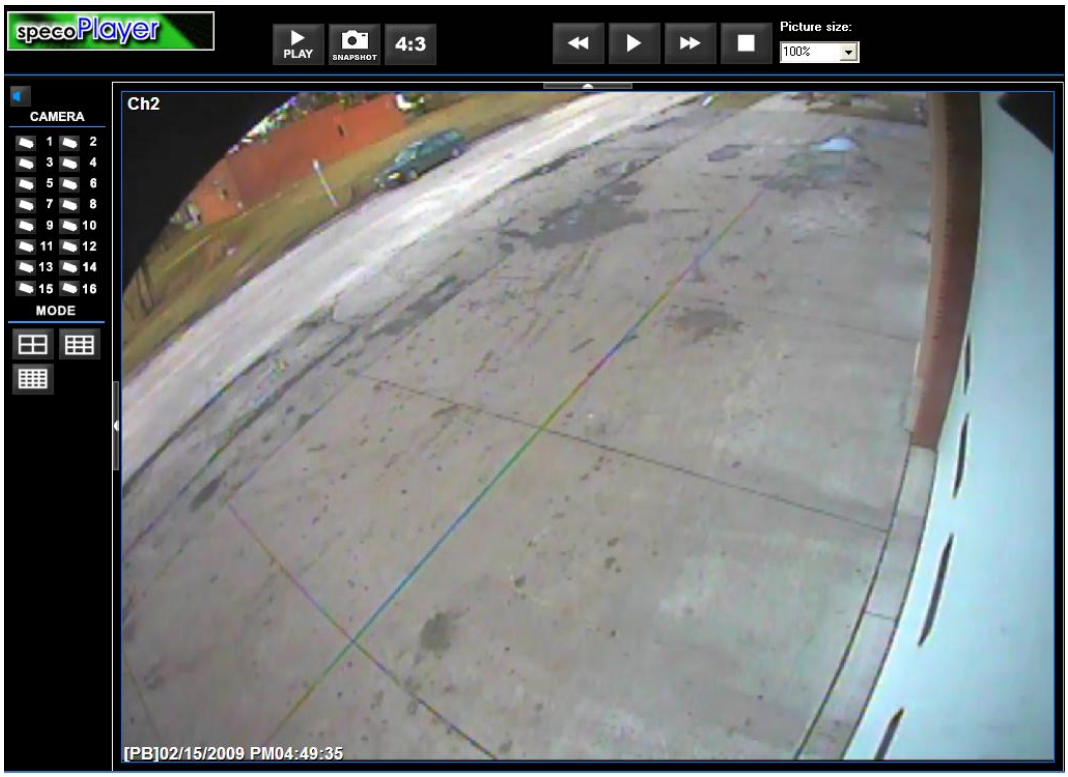

Figure A8.1: Camera 5, reference daylight field of view.

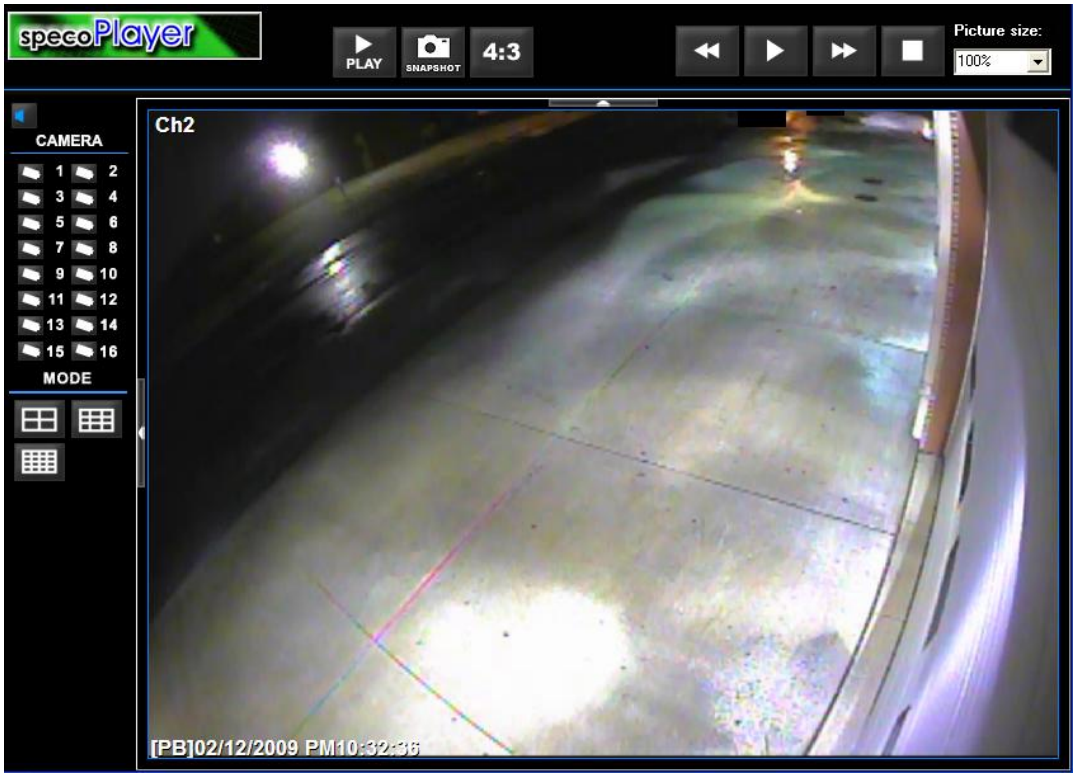

Figure A8.2: Camera 5, image 1.

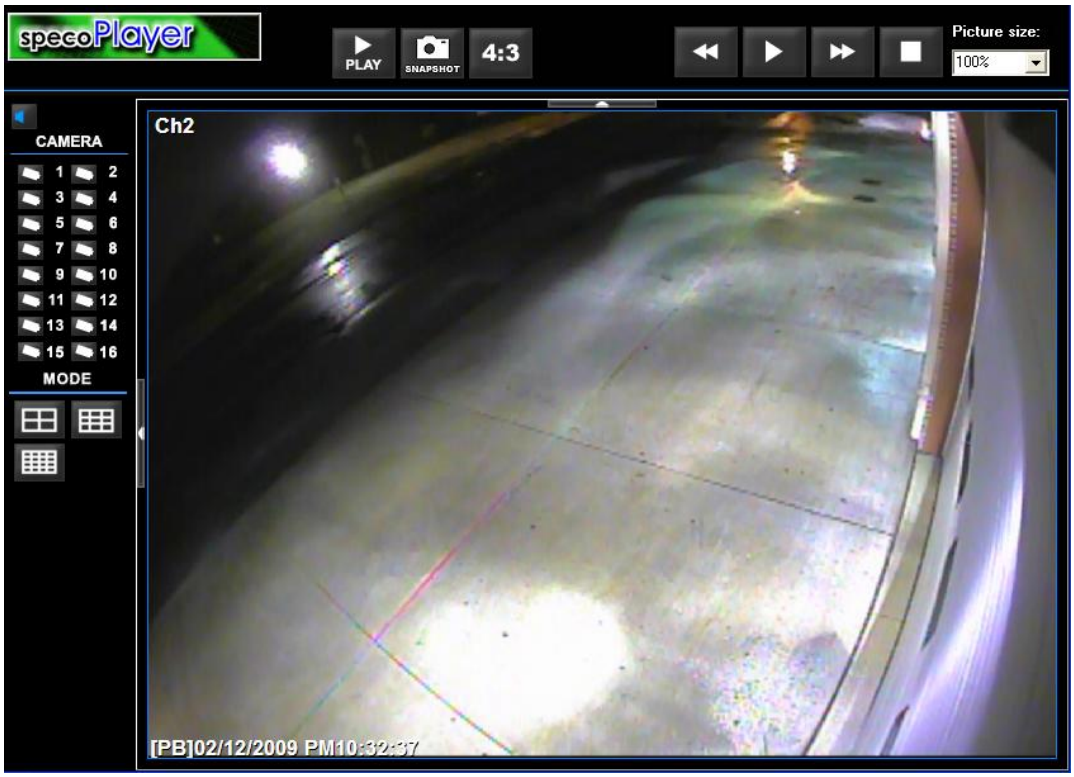

Figure A8.3: Camera 5, image 2.

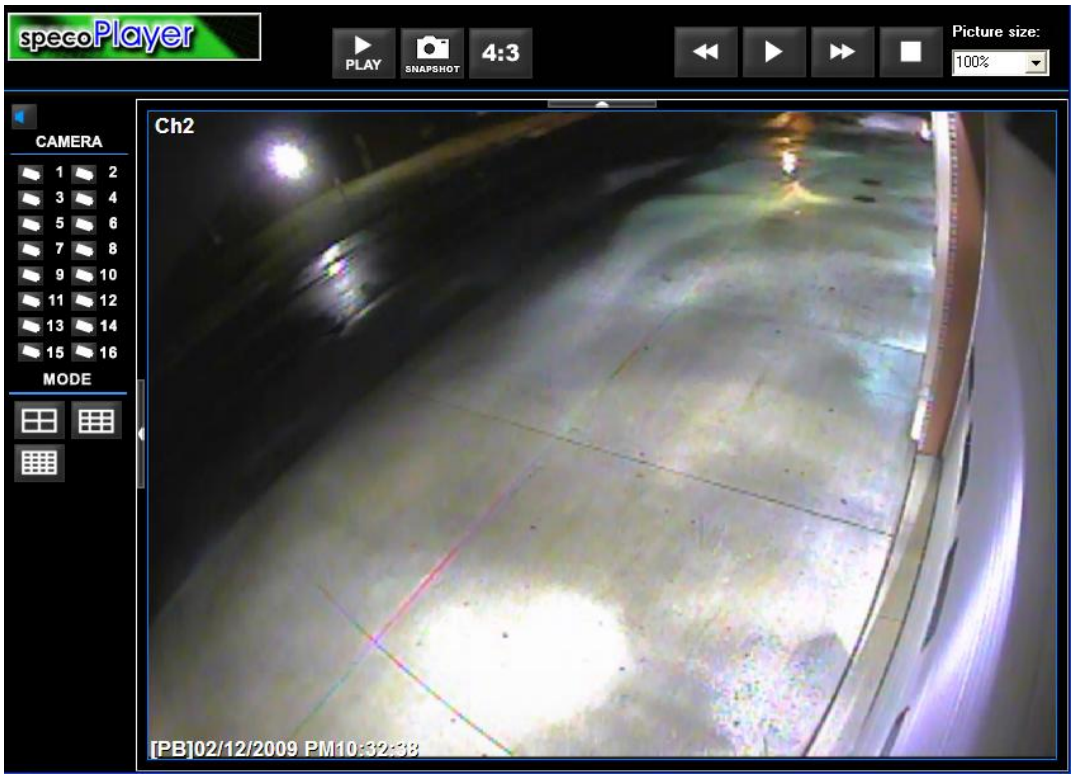

Figure A8.4: Camera 5, image 3.

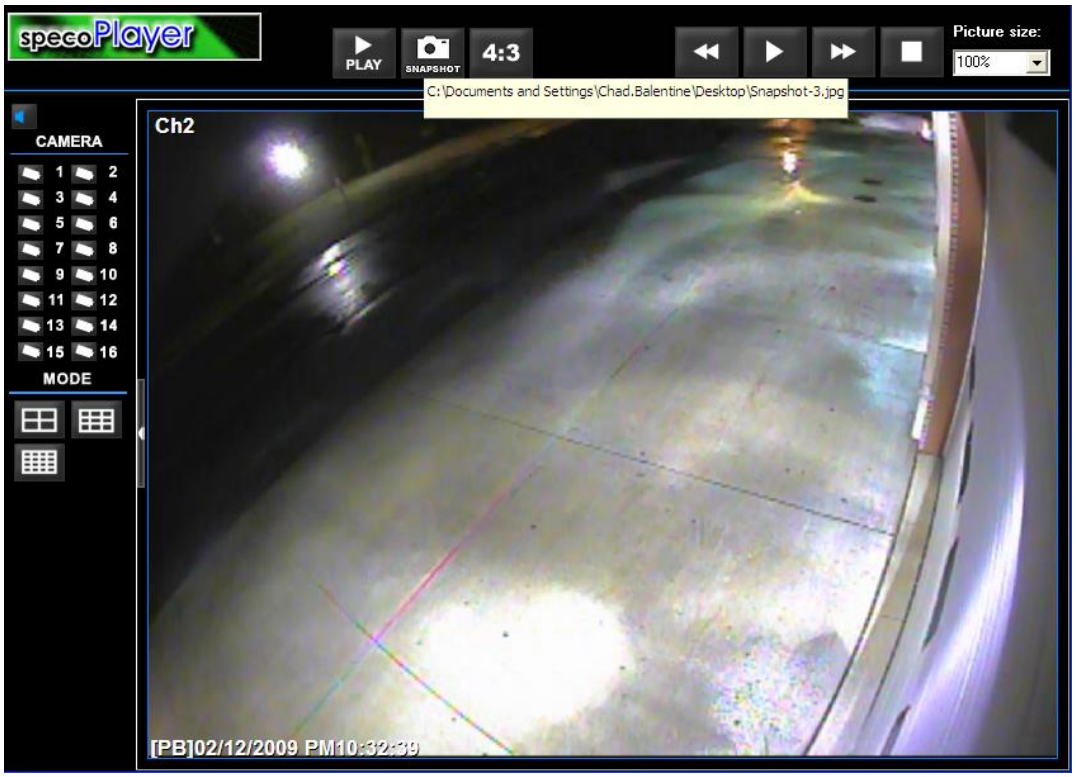

Figure A8.5: Camera 5, image 4.

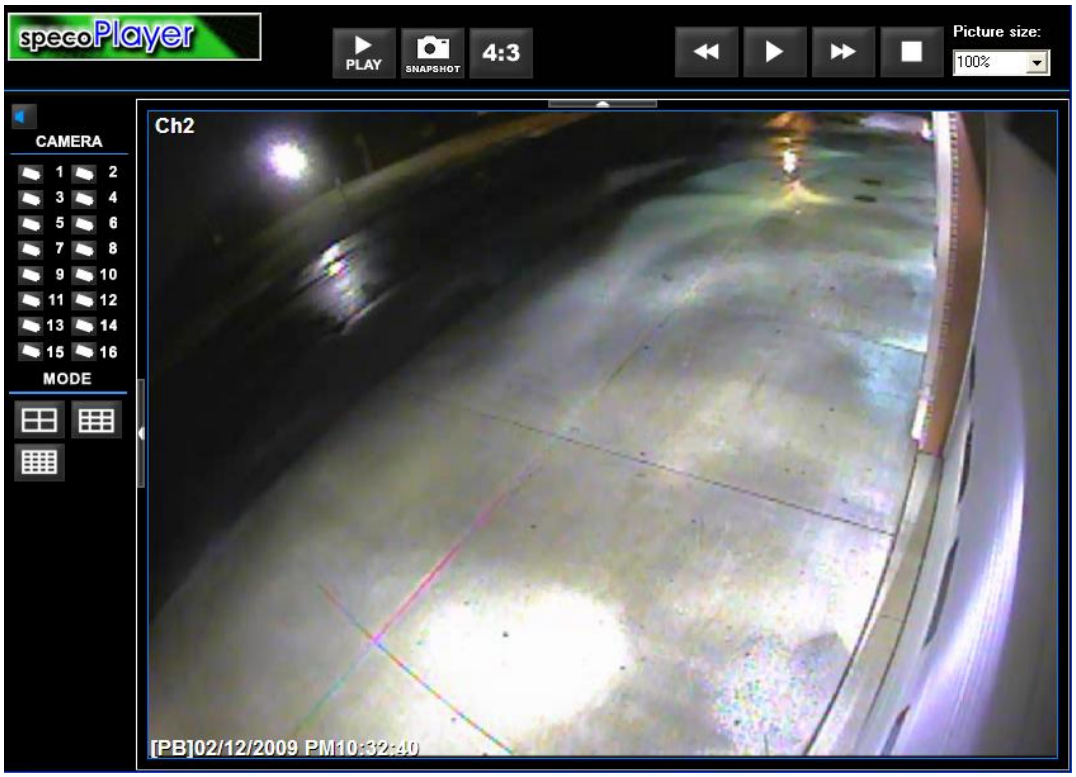

Figure A8.6: Camera 5, image 5

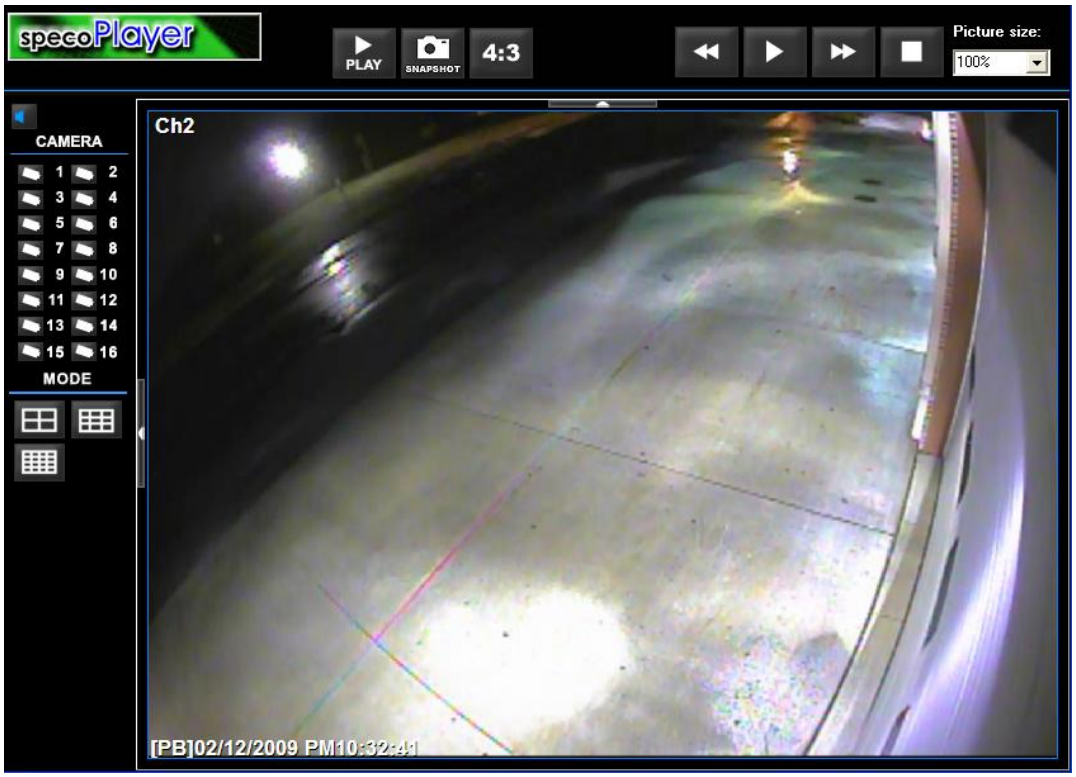

Figure A8.7: Camera 5, image 6.

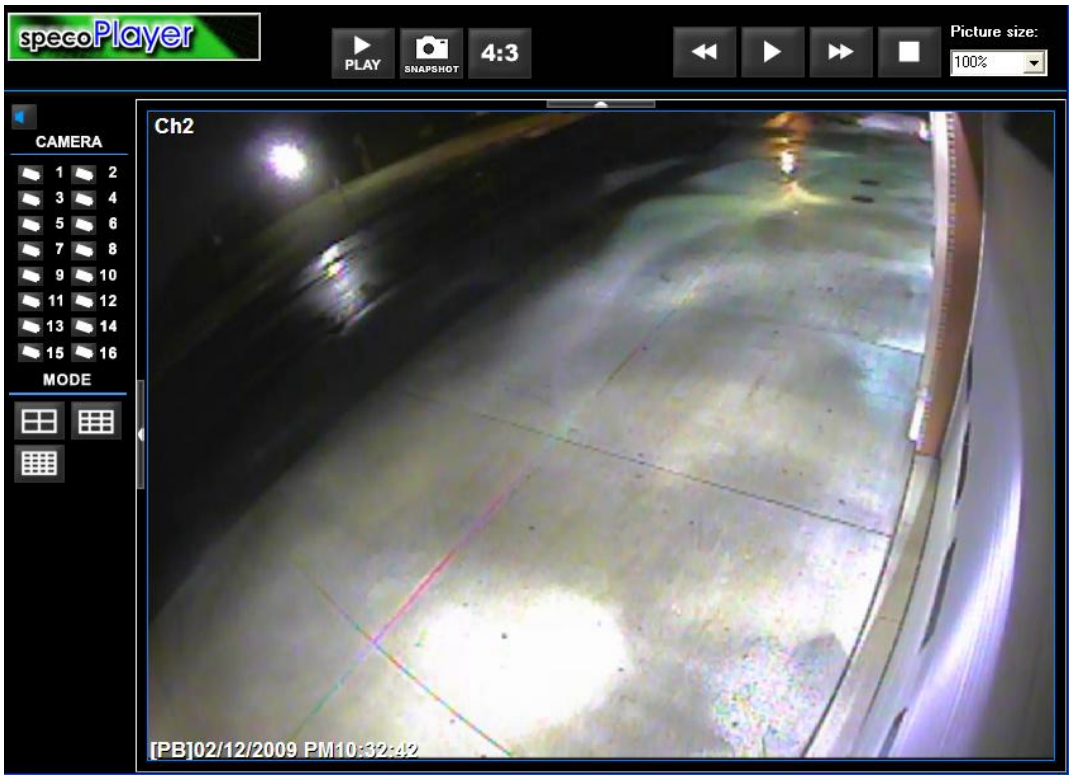

Figure A8.8: Camera 5, image 7.

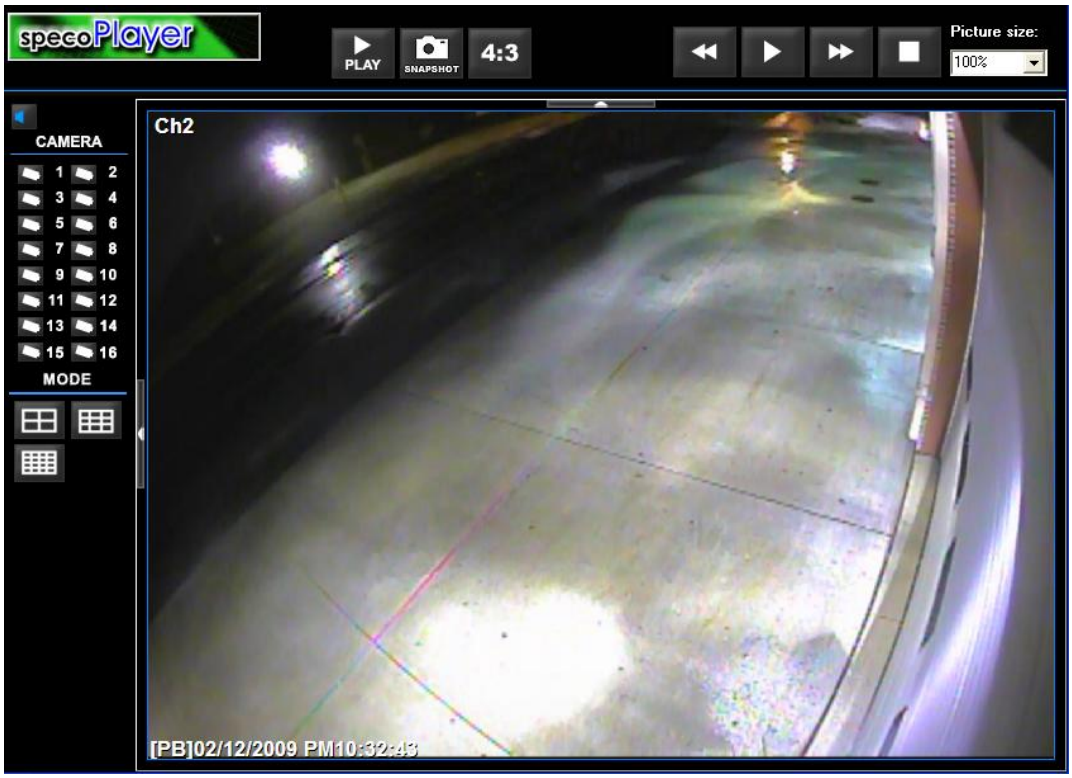

Figure A8.9: Camera 5, image 8.

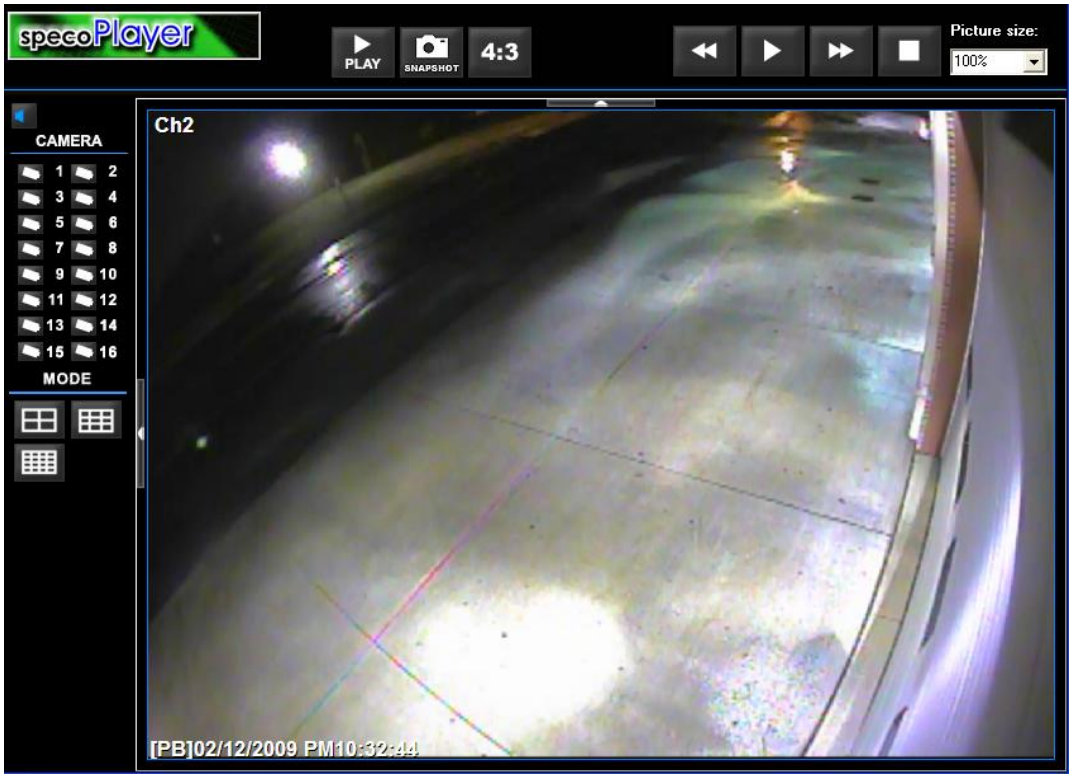

Figure A8.10: Camera 5, image 9.

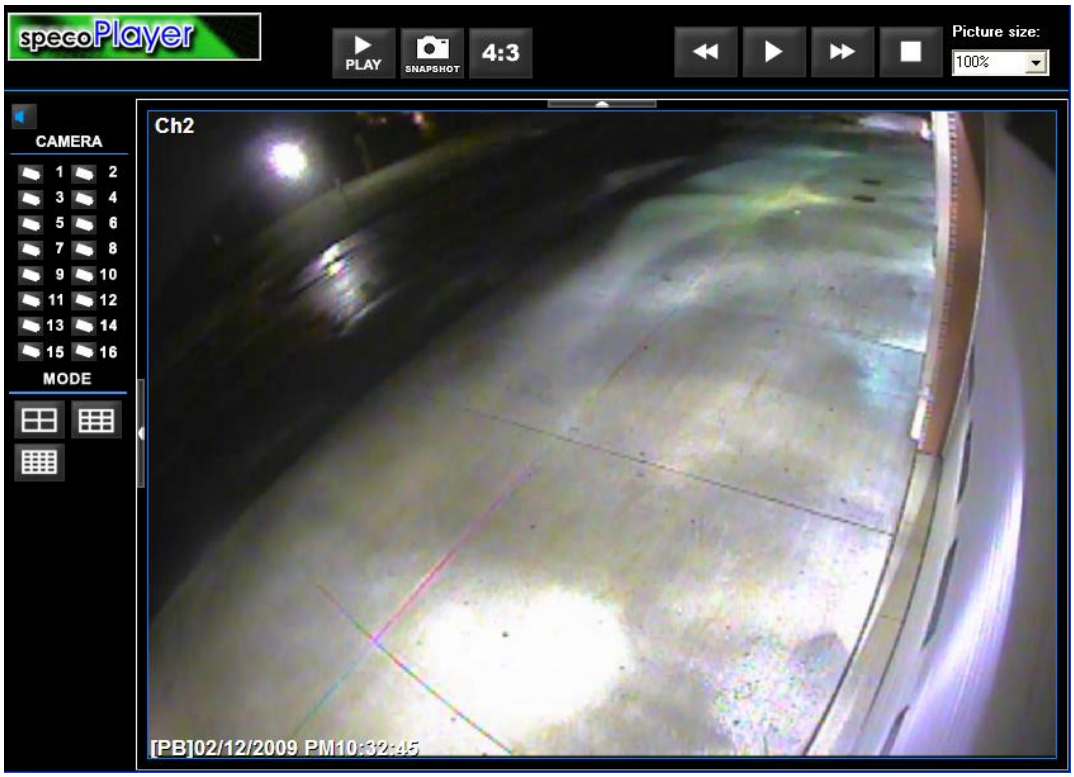

Figure A8.11: Camera 5, image 10.

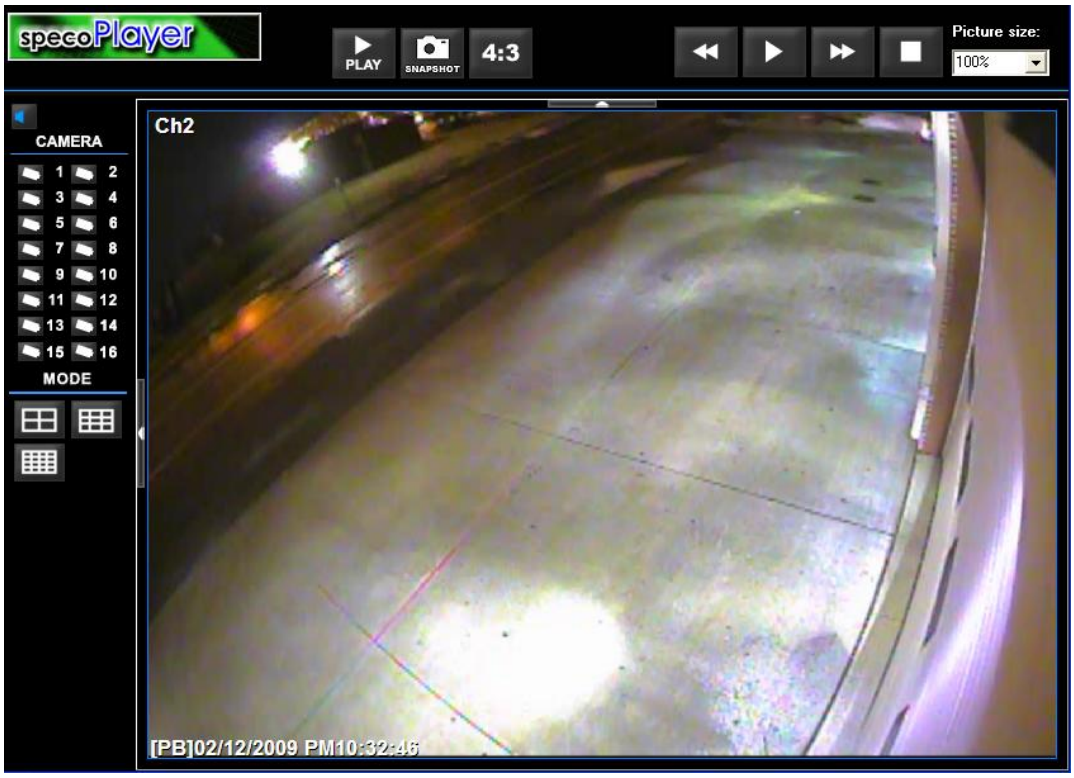

Figure A8.12: Camera 5, image 11.

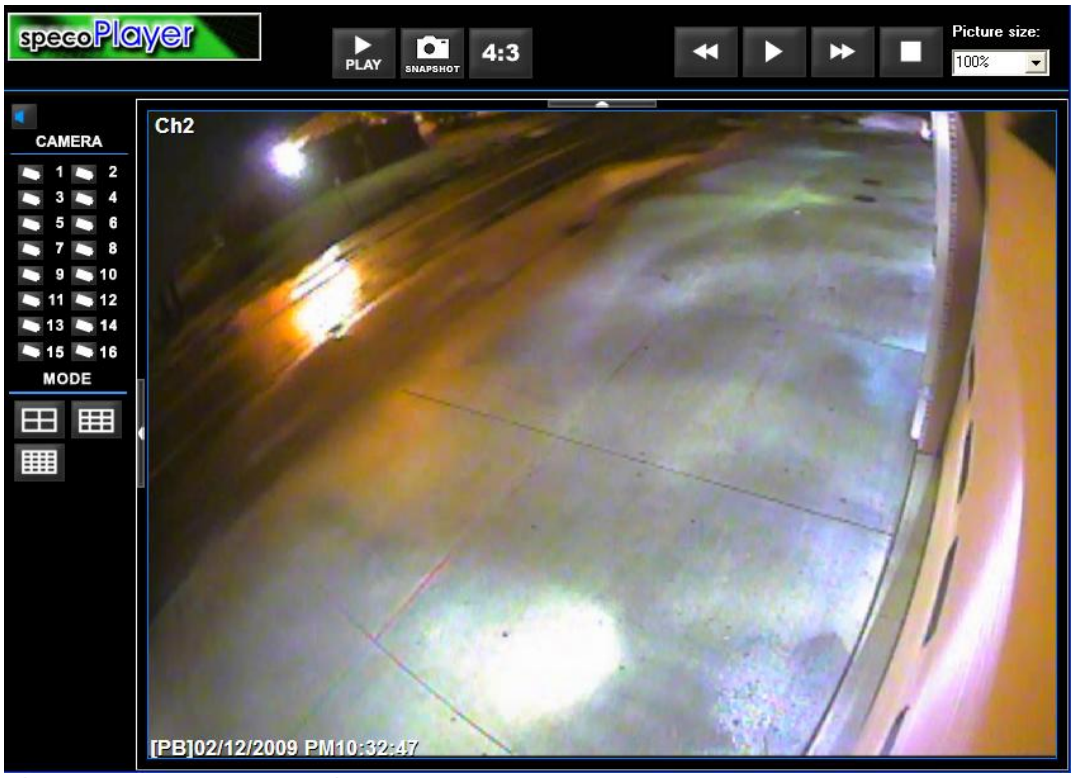

Figure A8.13: Camera 5, image 12.

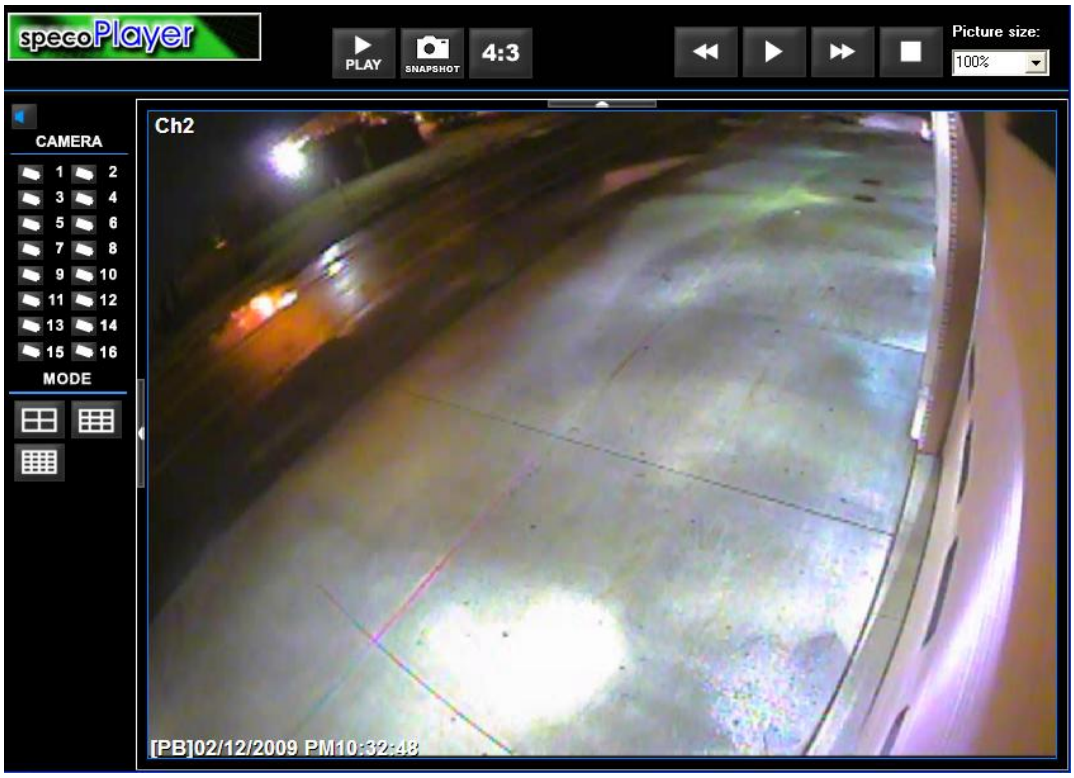

Figure A8.14: Camera 5, image 13.

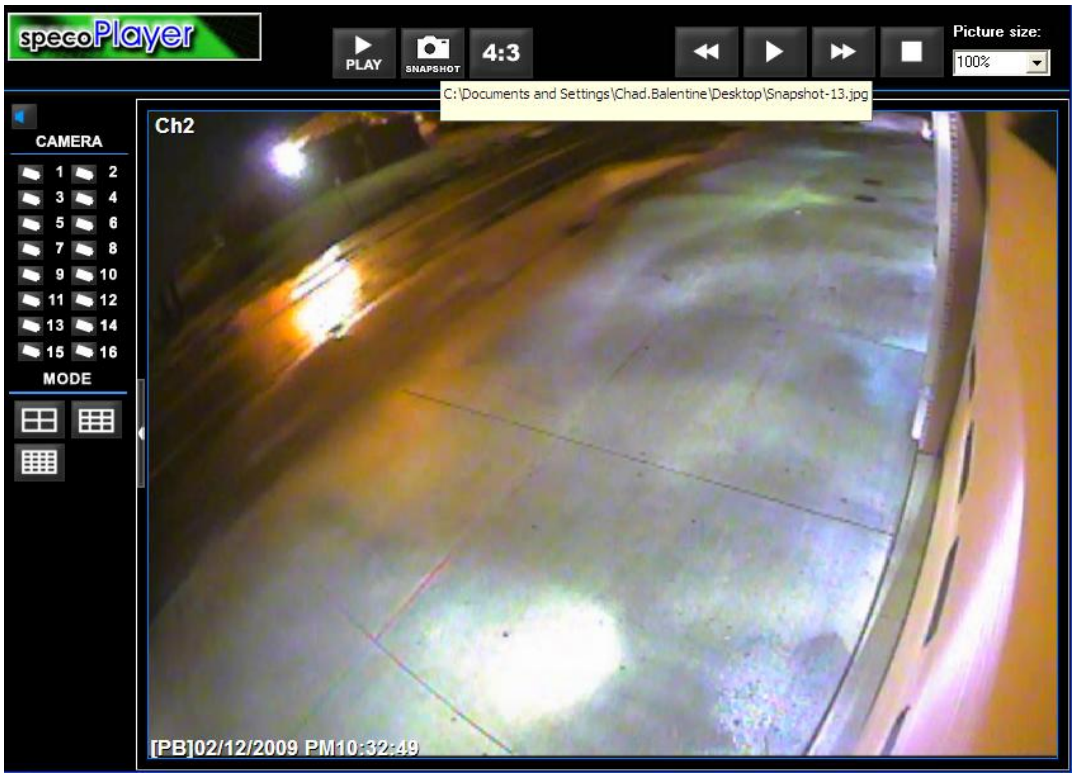

Figure A8.15: Camera 5, image 14.

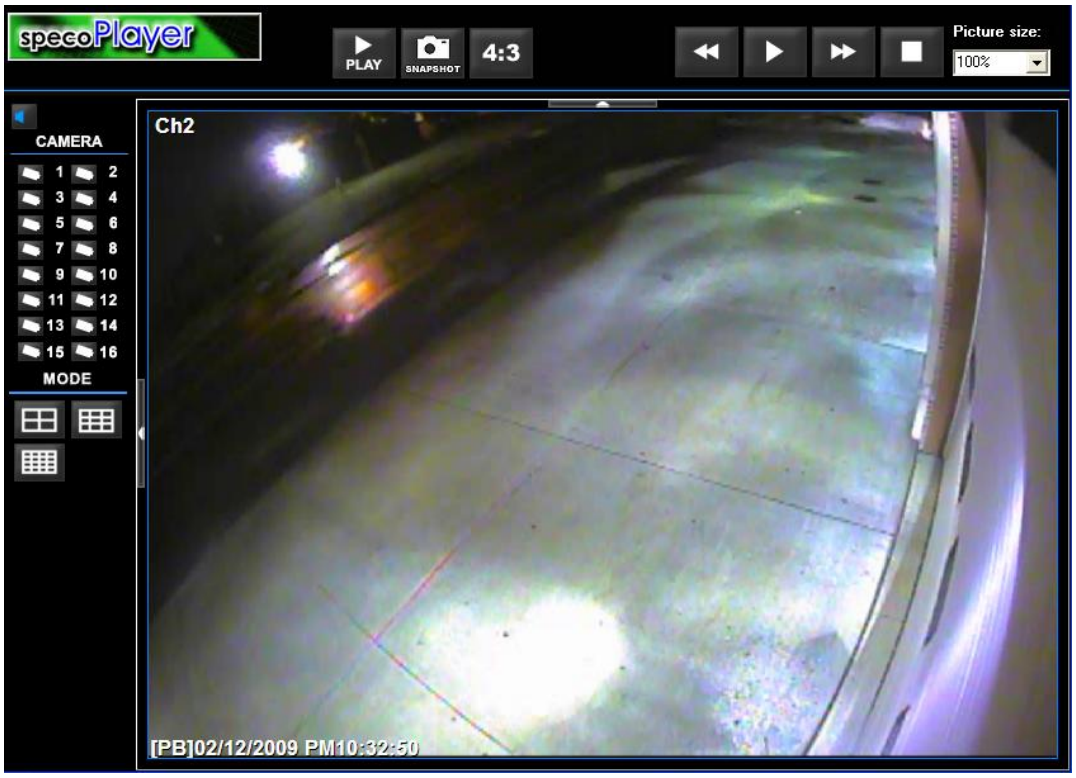

Figure A8.16: Camera 5, image 15.

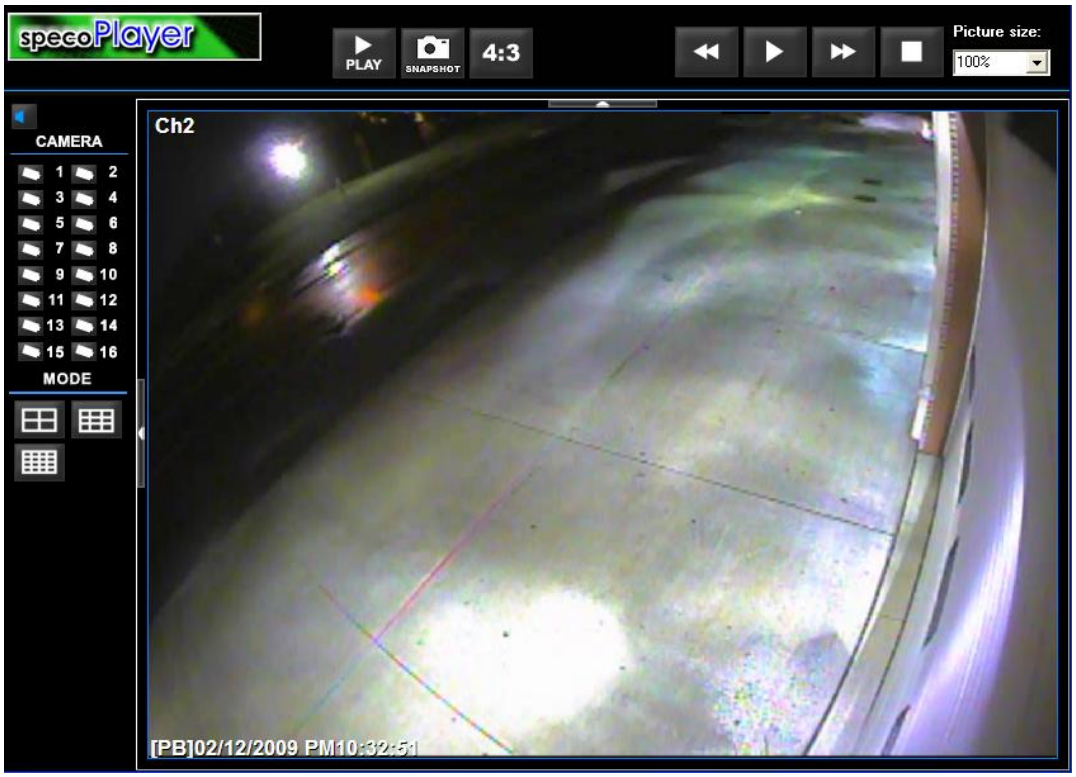

Figure A8.17: Camera 5, image 16.

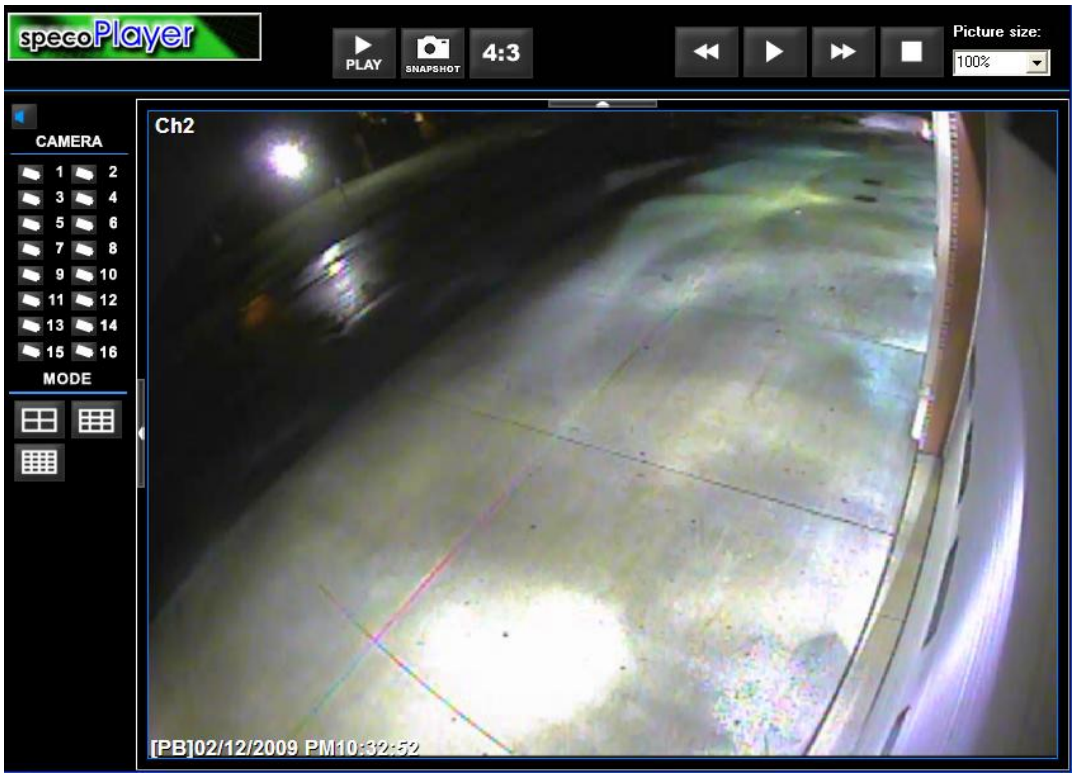

Figure A8.18: Camera 5, image 17.

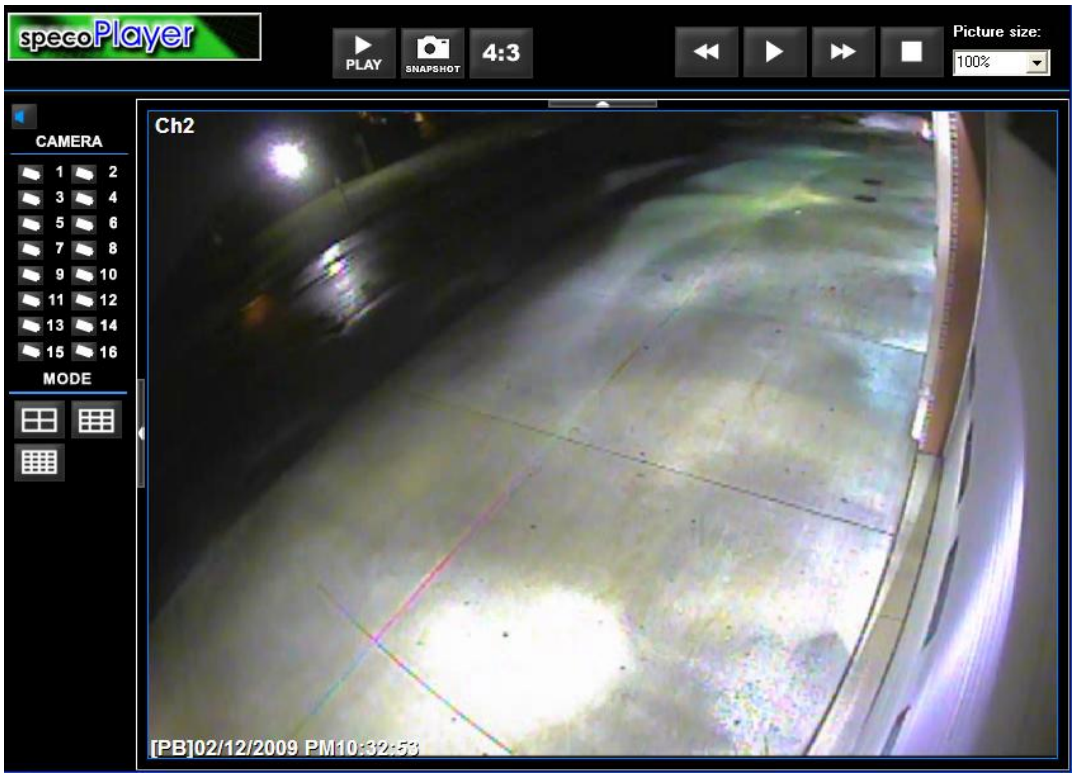

Figure A8.19: Camera 5, image 18.

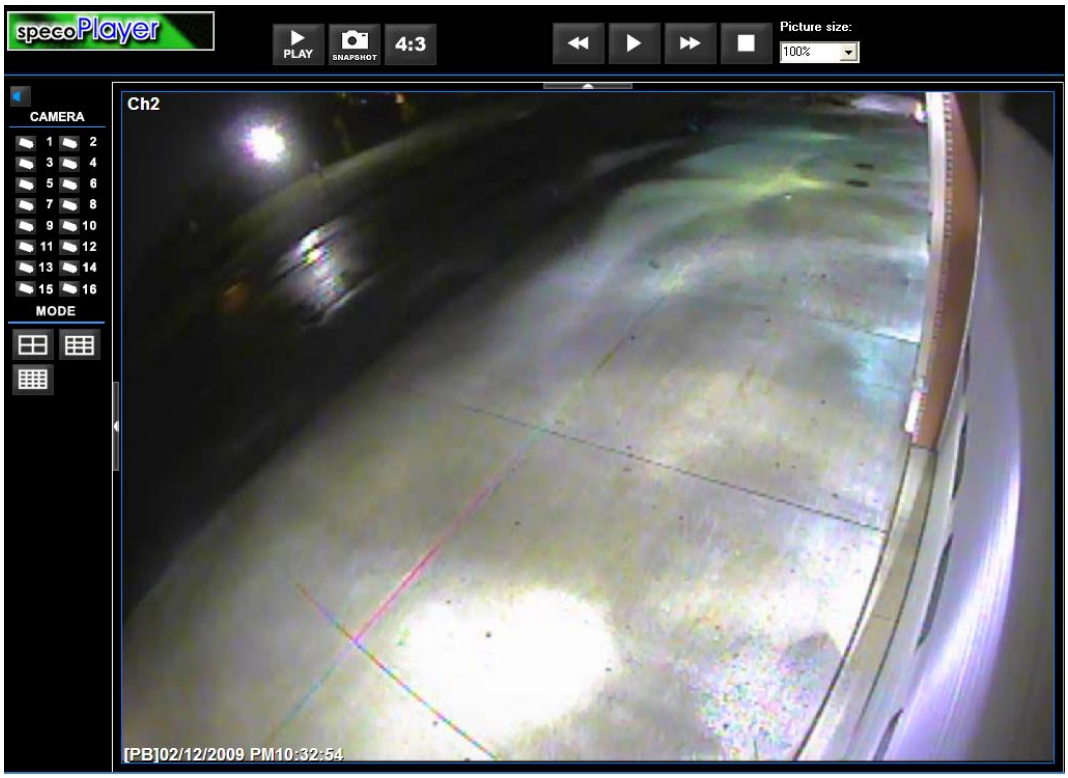

Figure A8.20: Camera 5, image 19.

Figure A8.21: Camera 5, image 20.

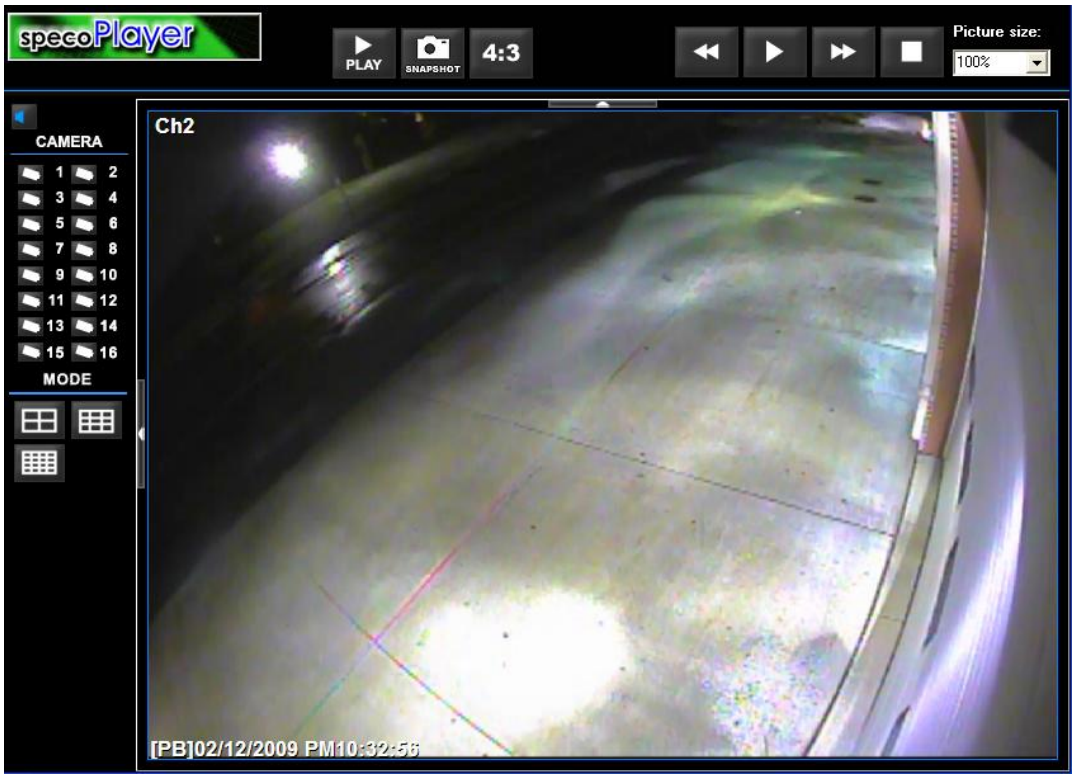

Figure A8.22: Camera 5, image 21.

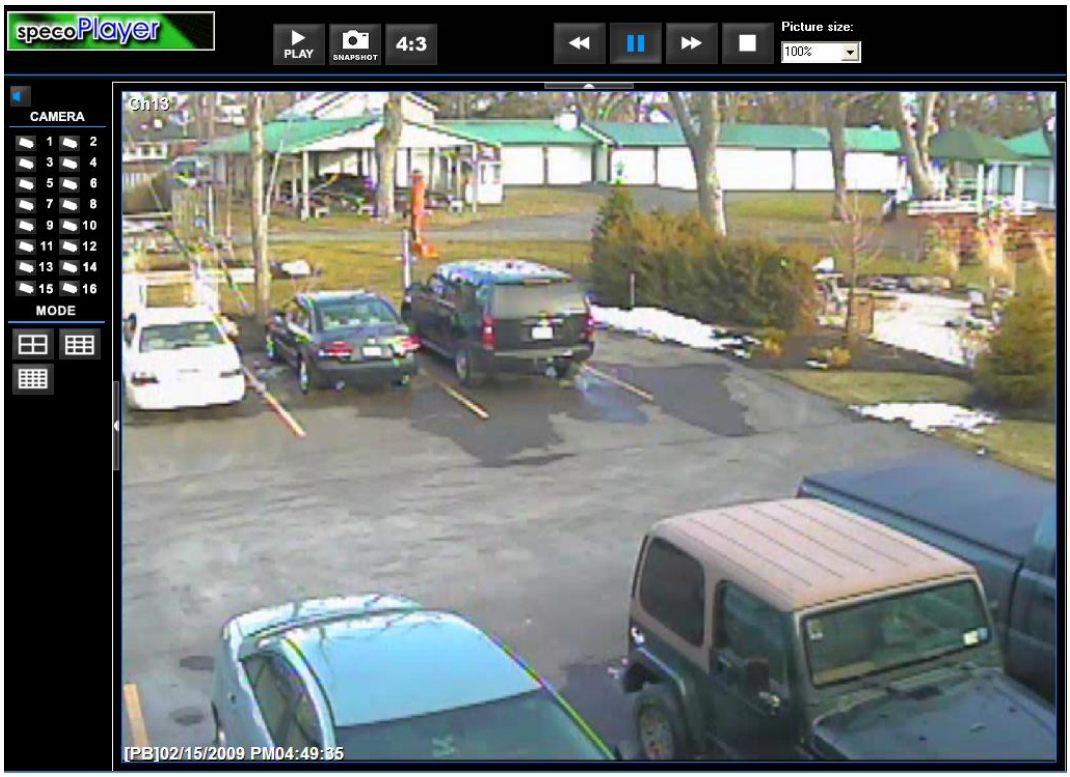

Figure A8.23: Camera 3, reference daylight field of view.

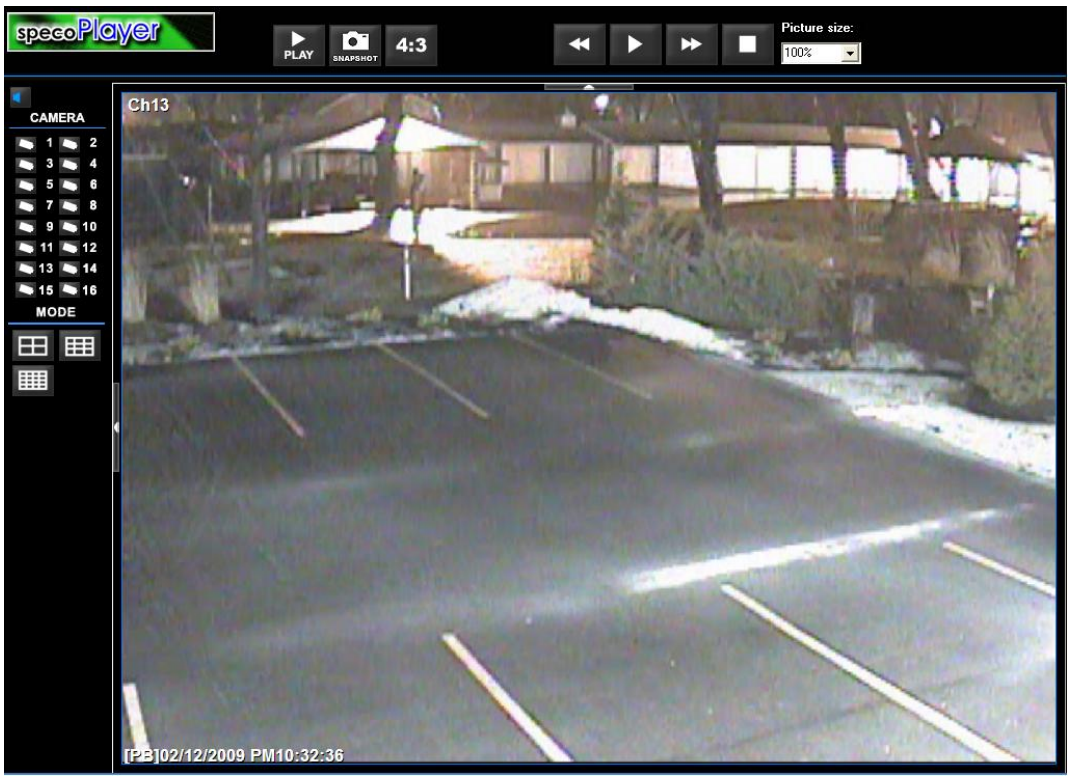

Figure A8.24: Camera 3, image 1.

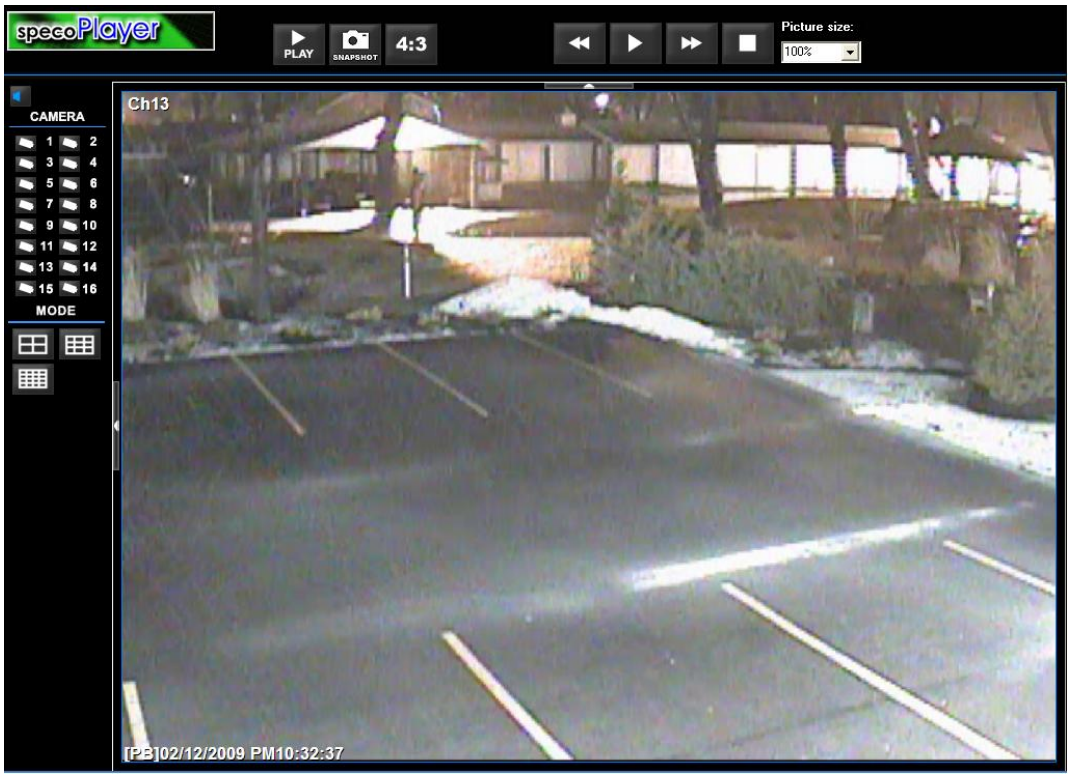

Figure A8.25: Camera 3, image 2.

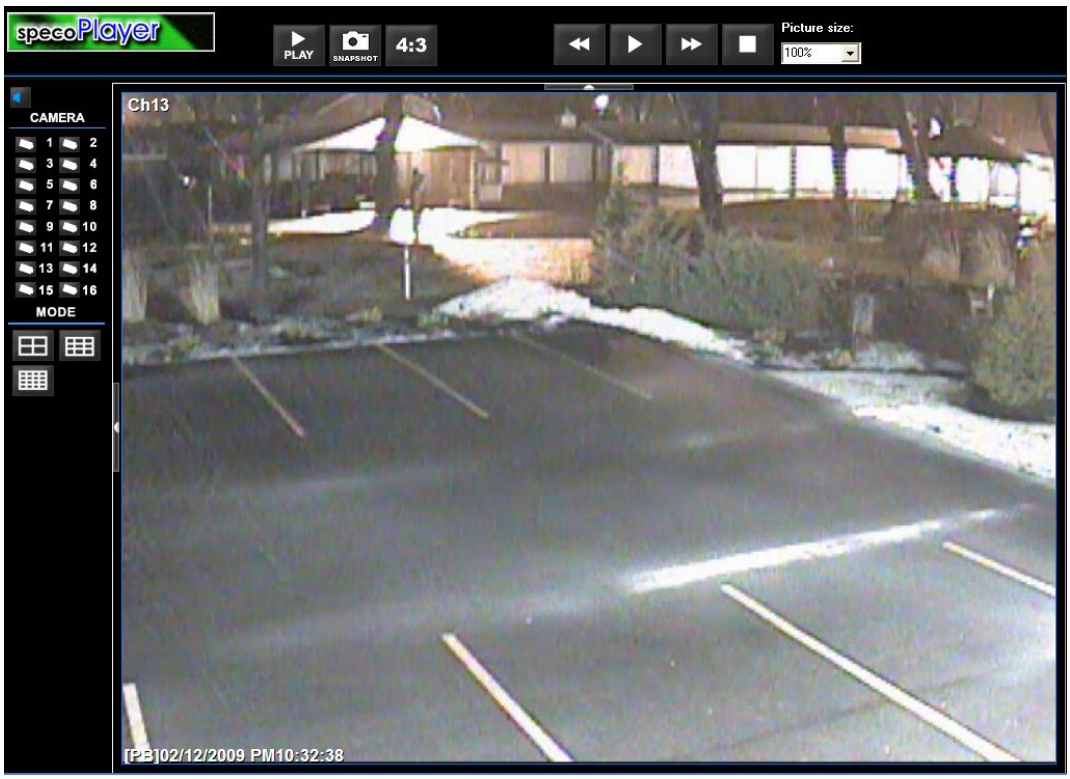

Figure A8.26: Camera 3, image 3.

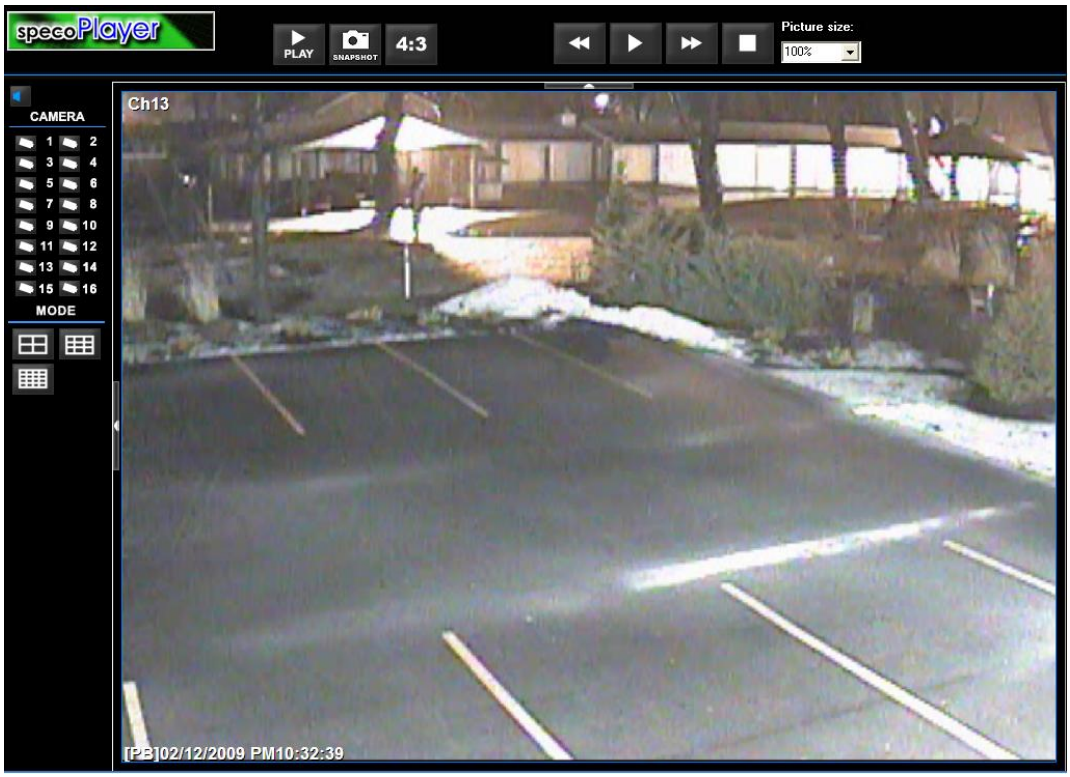

Figure A8.27: Camera 3, image 4.

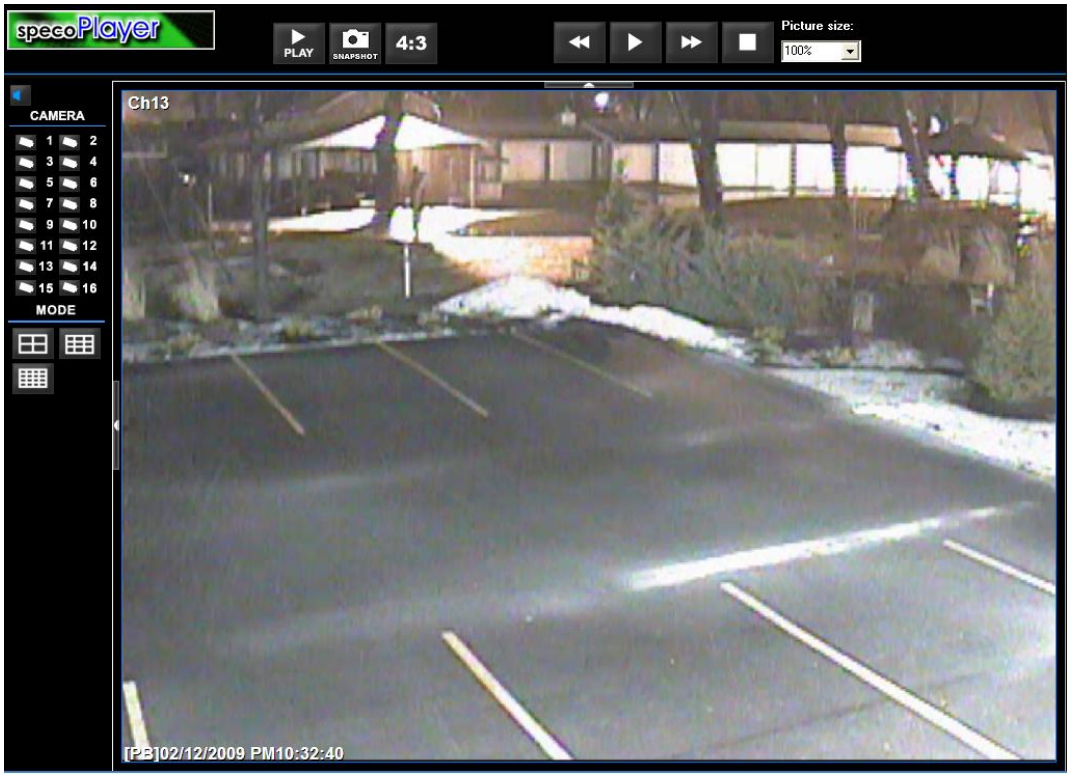

Figure A8.28: Camera 3, image 5.

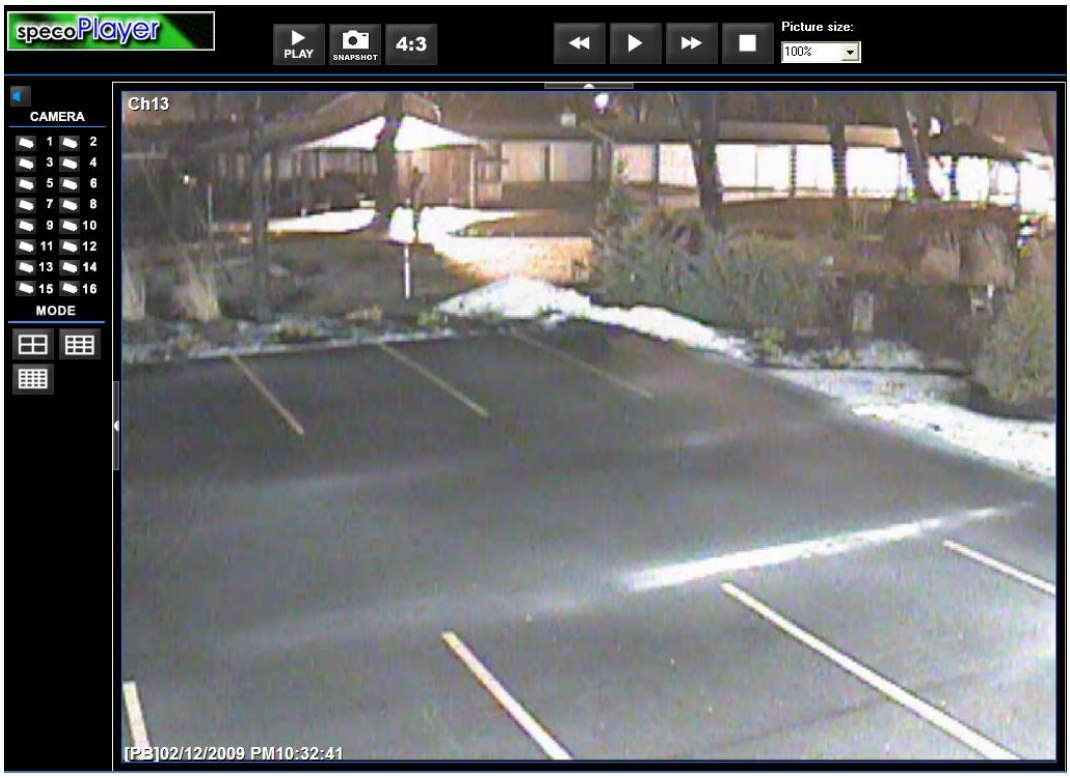

Figure A8.29: Camera 3, image 6.

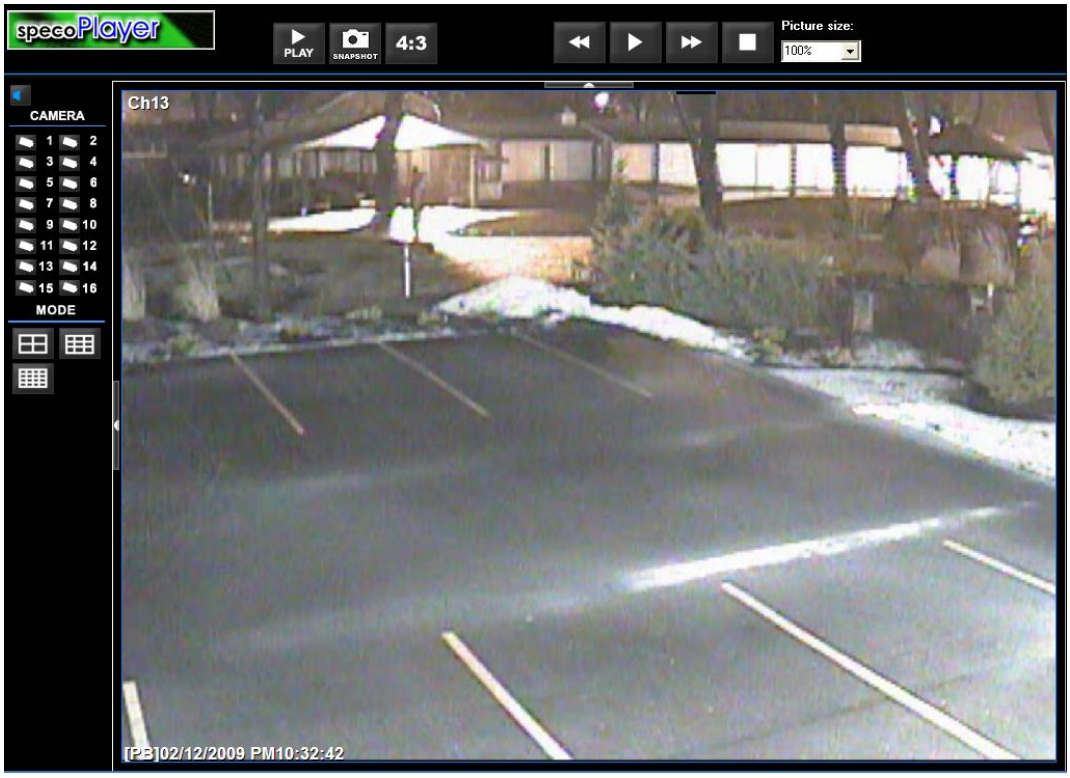

Figure A8.30: Camera 3, image 7.

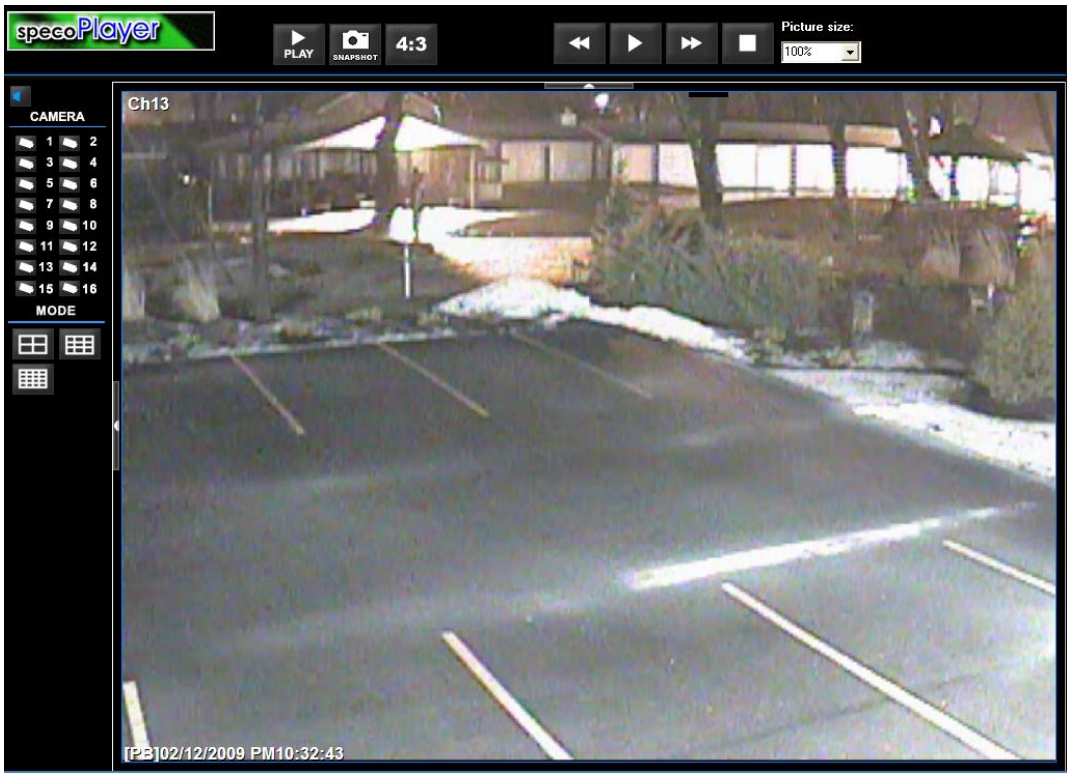

Figure A8.31: Camera 3, image 8.

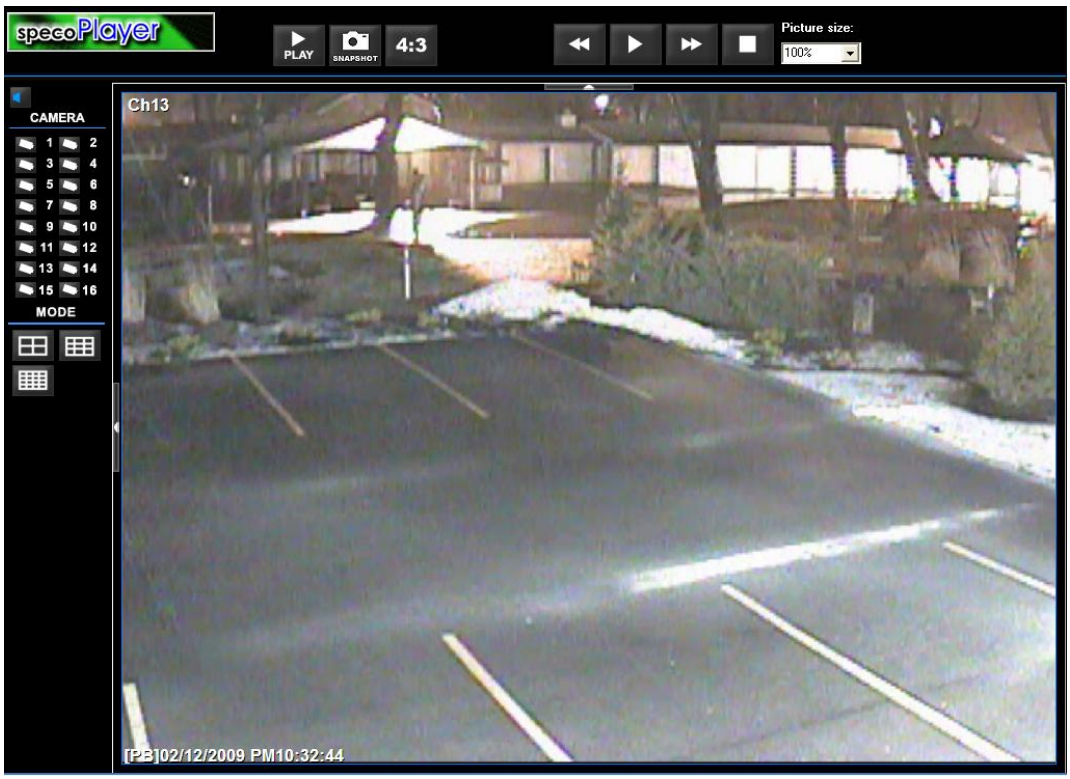

Figure A8.32: Camera 3, image 9.

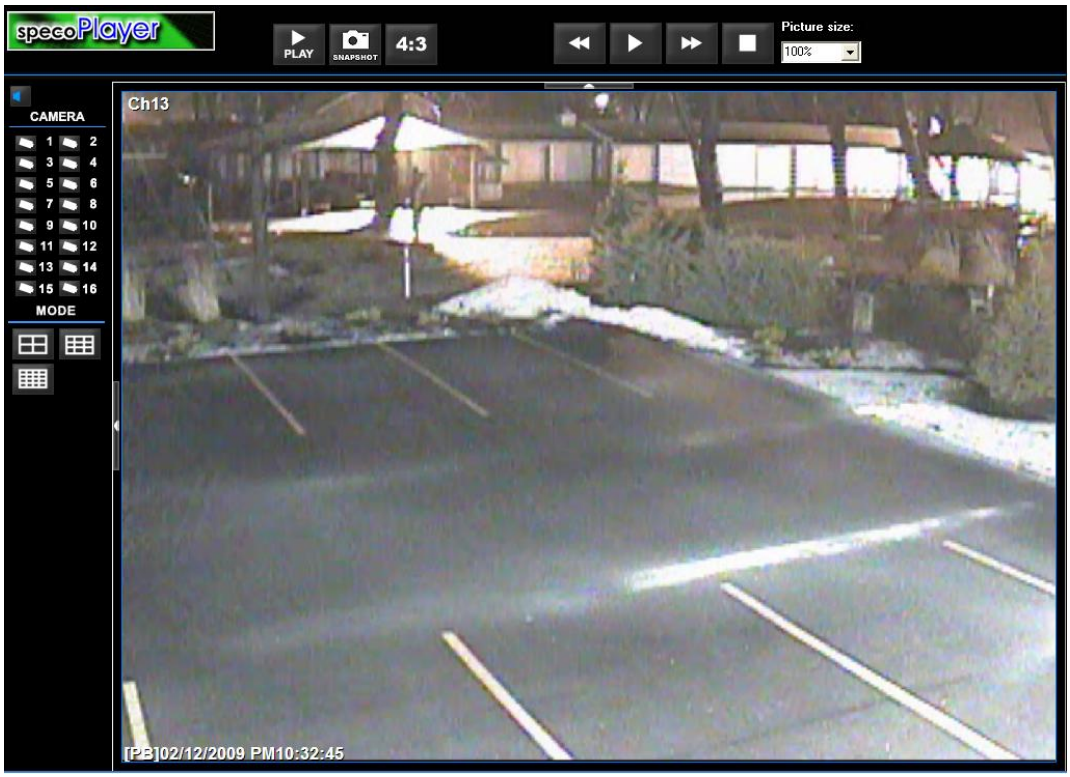

Figure A8.33: Camera 3, image 10.

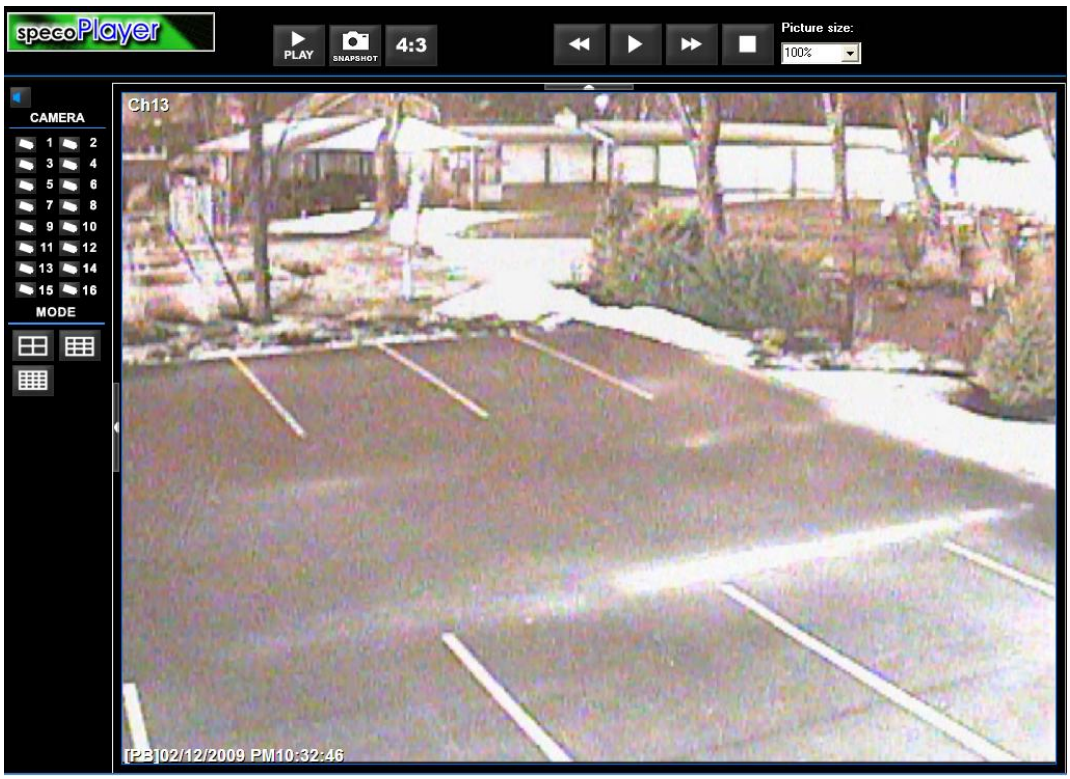

Figure A8.34: Camera 3, image 11.

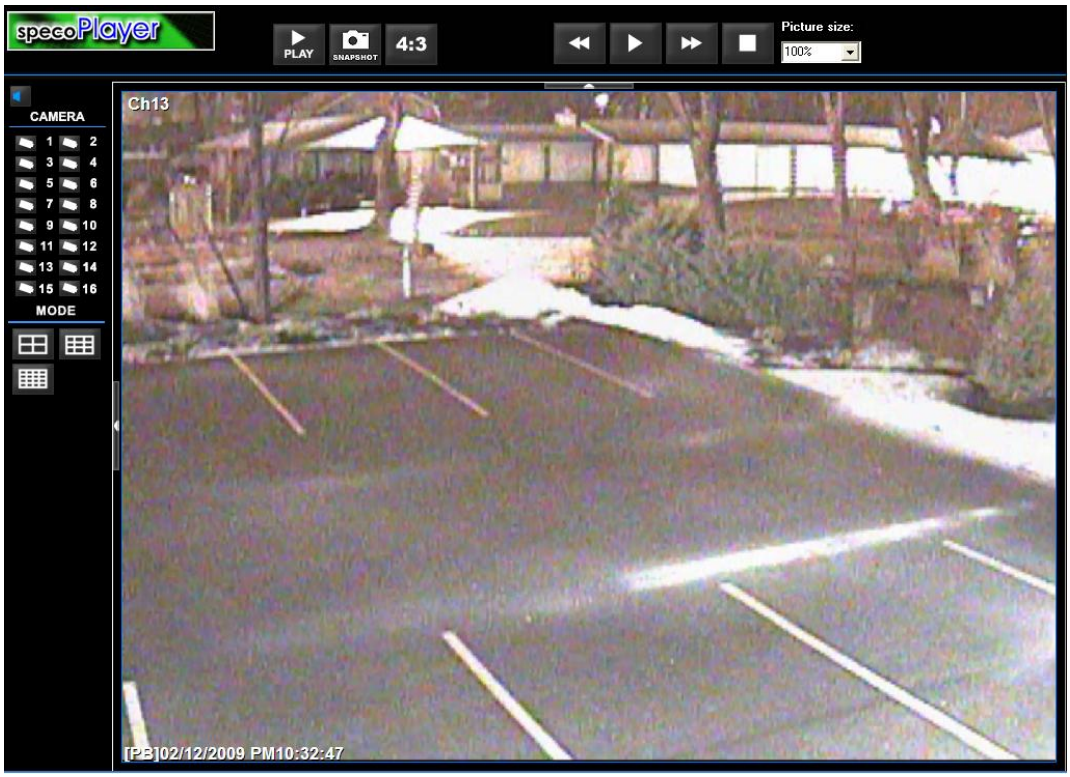

Figure A8.35: Camera 3, image 12.

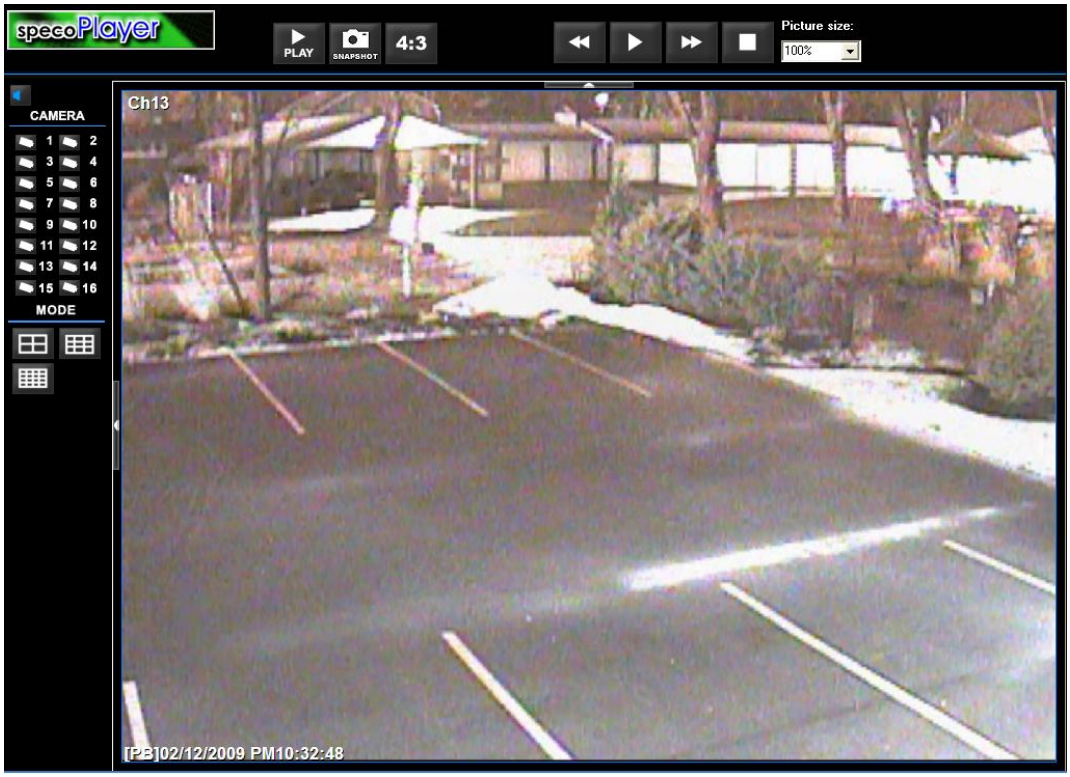

Figure A8.36: Camera 3, image 13.

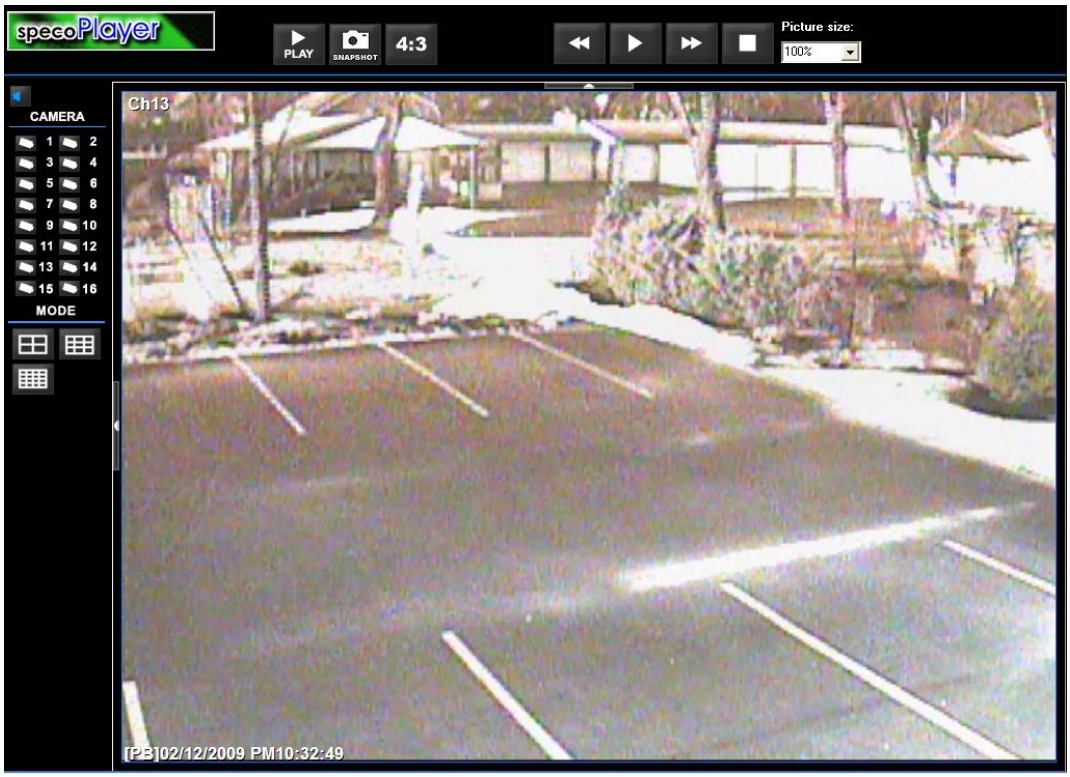

Figure A8.37: Camera 3, image 14.

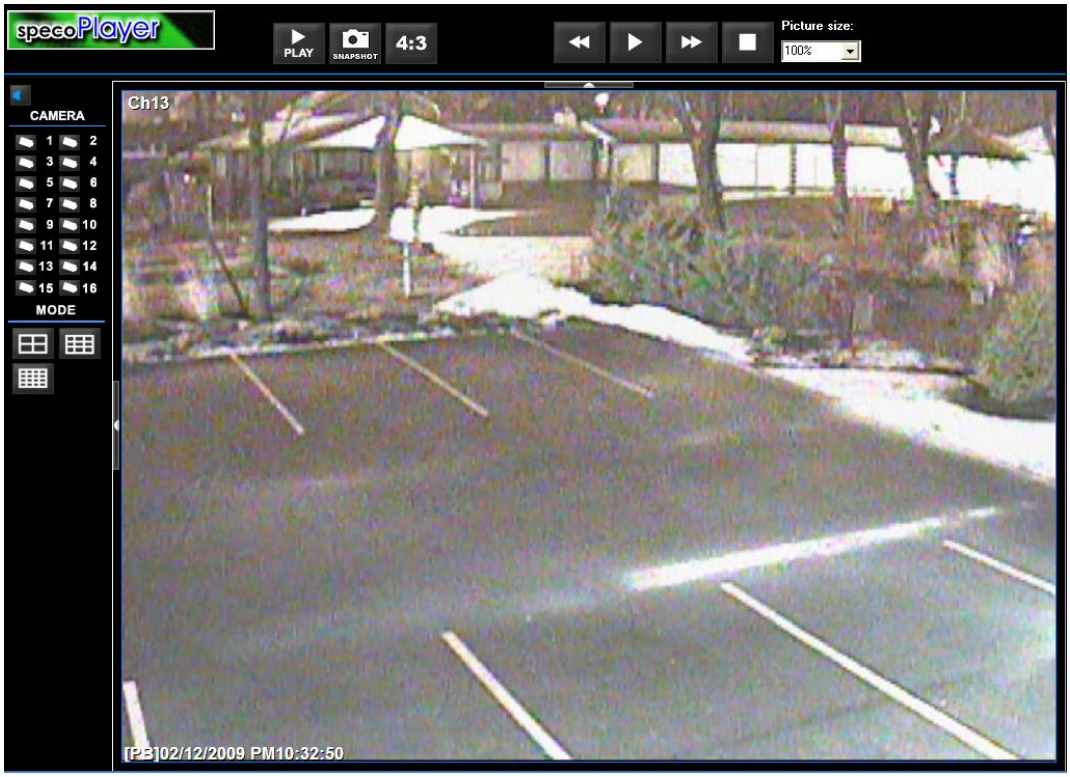

Figure A8.38: Camera 3, image 15.

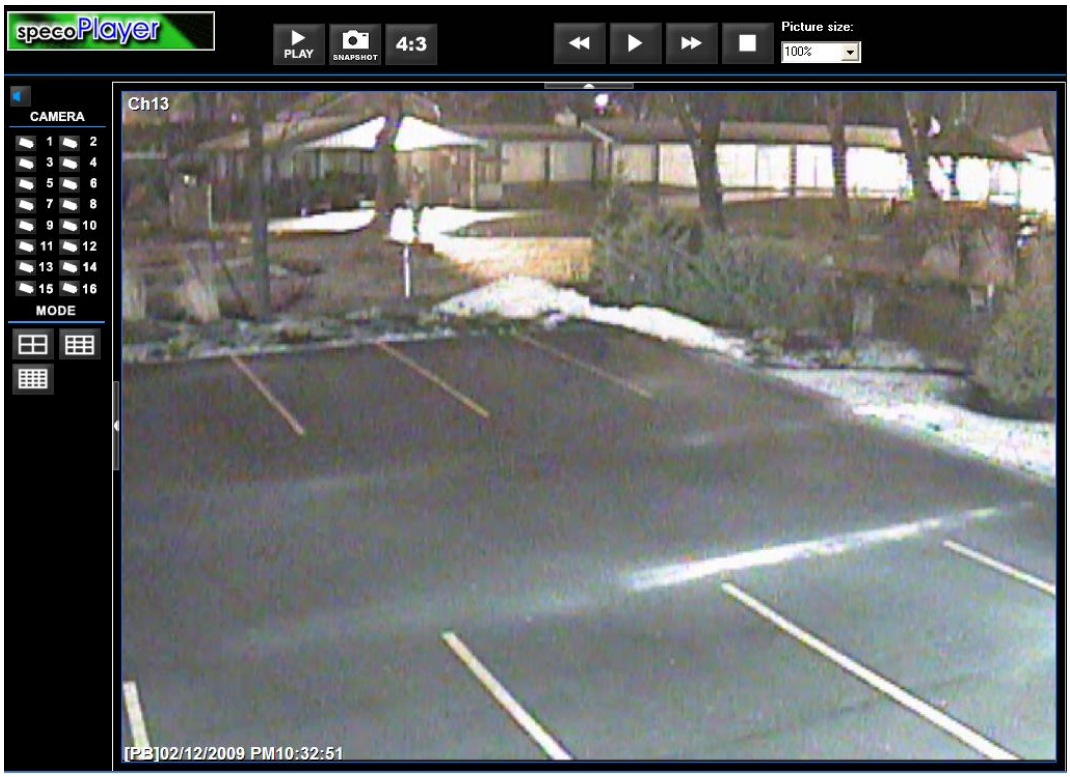

Figure A8.39 Camera 3, image 16.

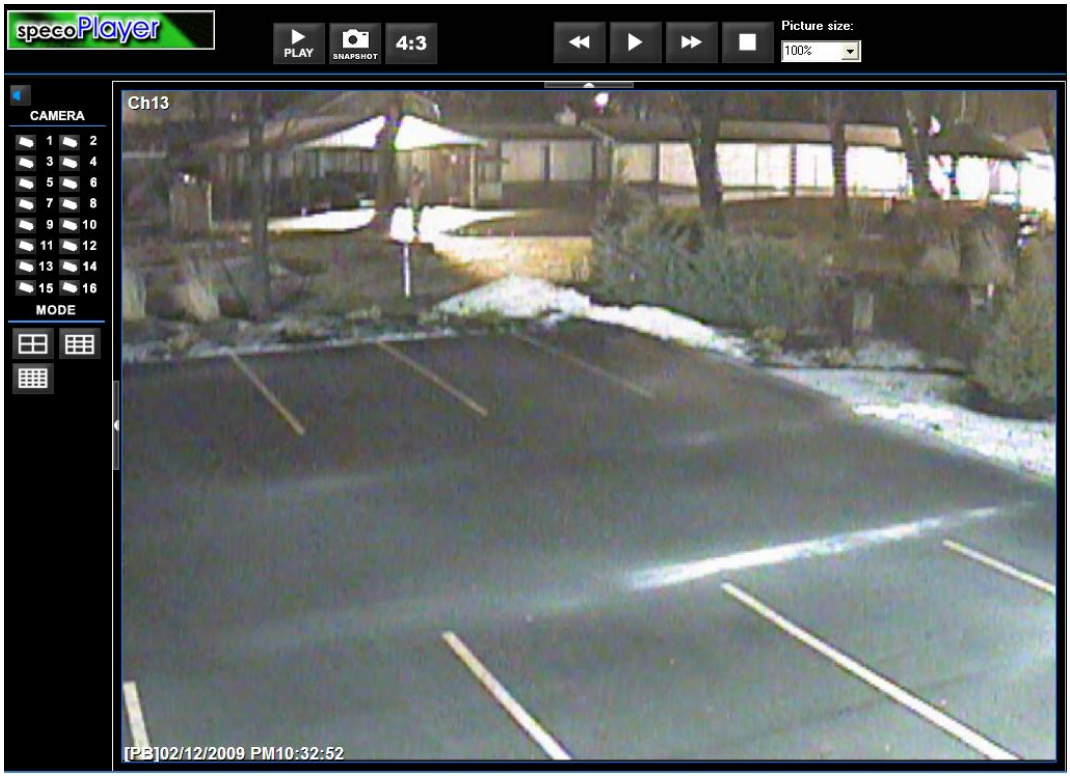

Figure A8.40: Camera 3, image 17.

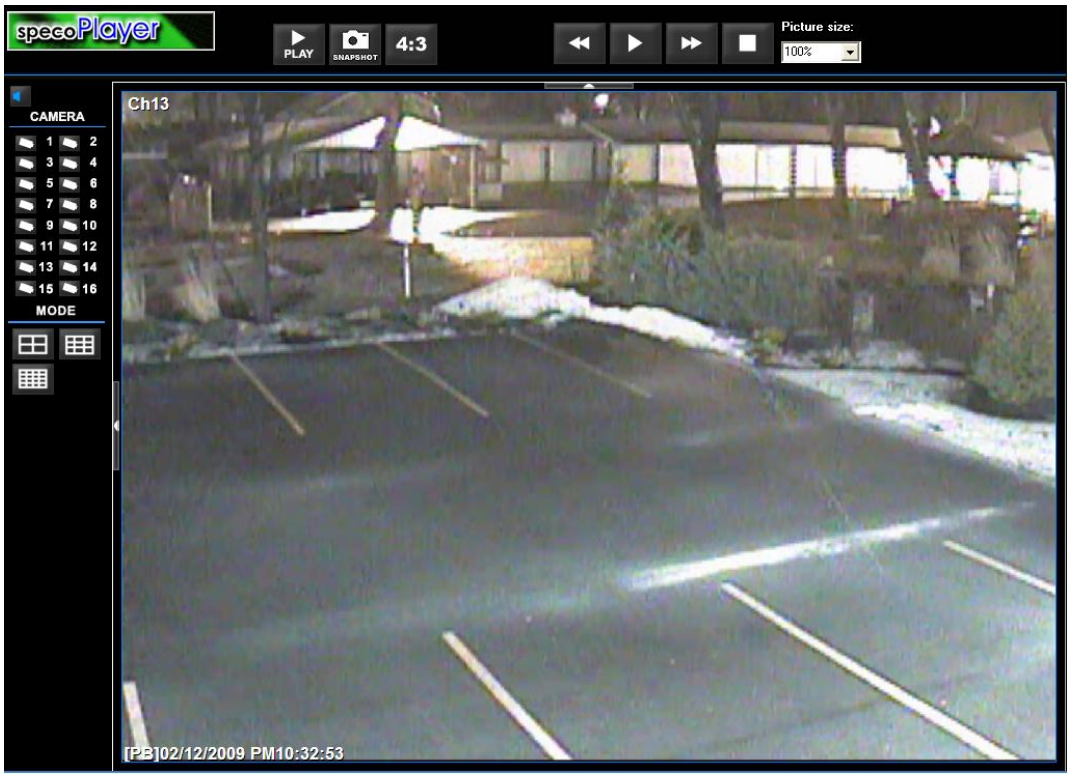

Figure A8.41: Camera 3, image 18.

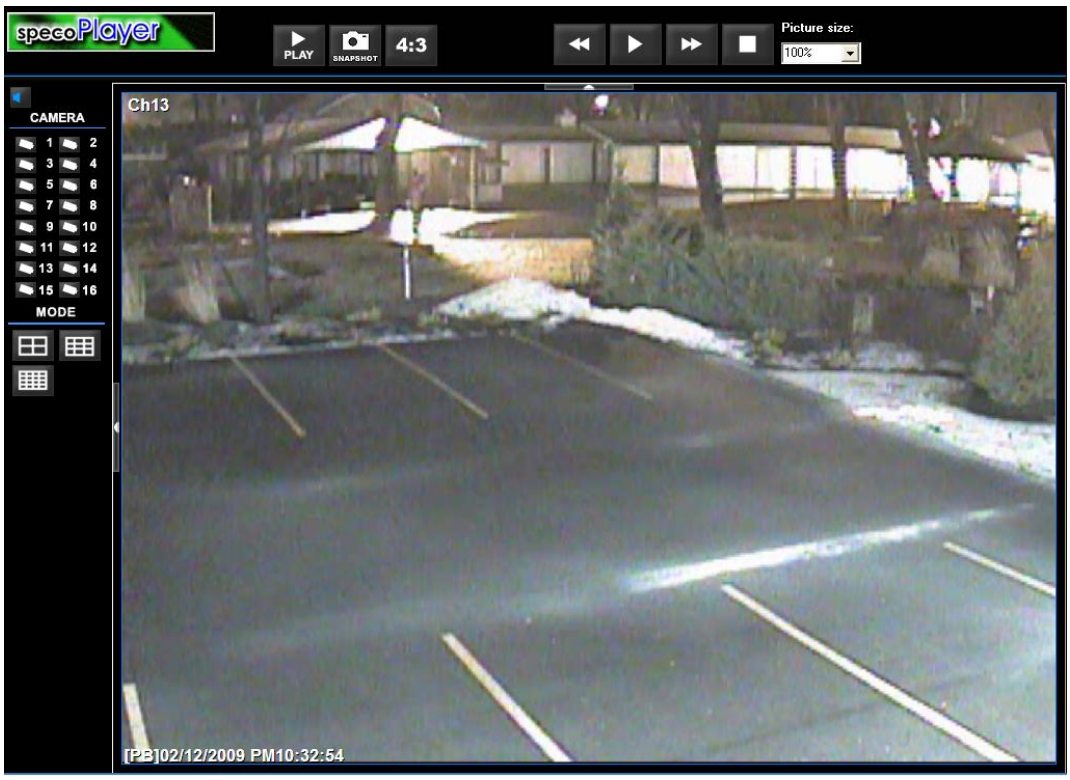

Figure A8.42: Camera 3, image 19.

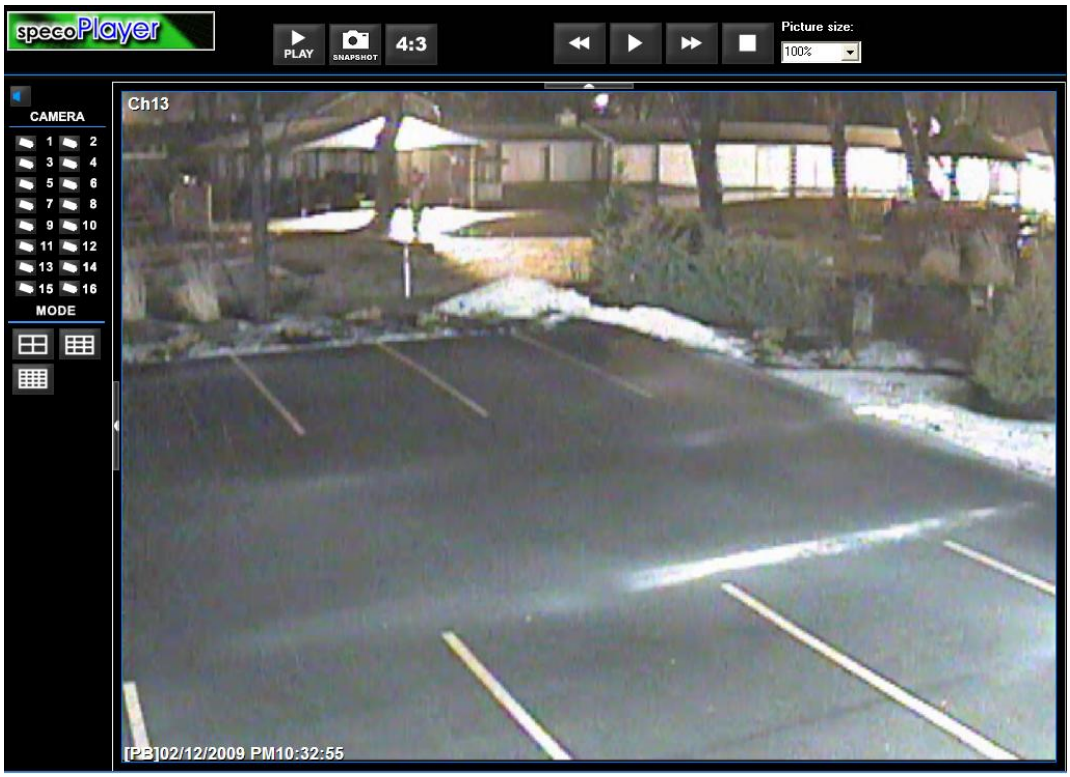

Figure A8.43: Camera 3, image 20.

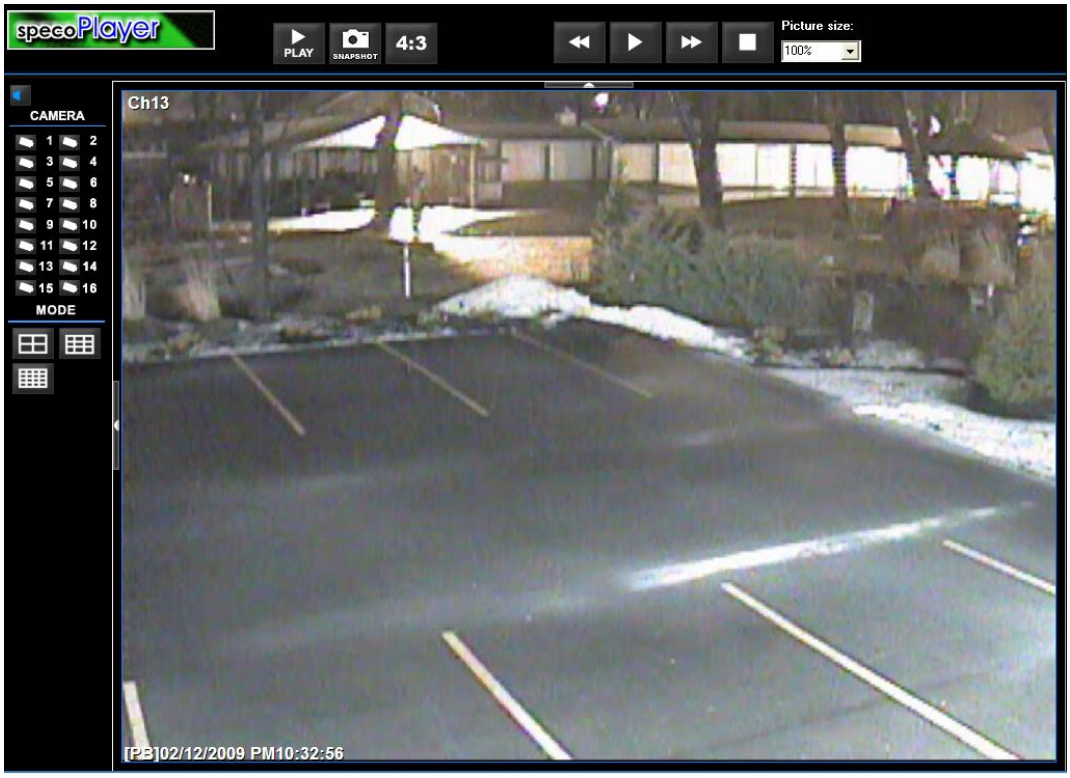

Figure A8.44: Camera 3, image 21.

Attachment 9: Stall Warning and Stick Pusher System

STALL WARNING/STICK PUSHER

Introduction

The Stall Protection System (SPS) gives an indication that the aircraft is near a stall condition and when the aircraft is in a stall condition, it gives a positive input to help the flight crew regain control.

General Description

Refer to Figure 1.The Stall Protection System (SPS) has the two primary functions that follow:

- Stick shakers
- Stick pusher.

Stick Shakers: The Stall Protection System (SPS) uses stick shakers to give a tactile and aural warning of a near stall condition.

Stick Pusher: When the aircraft is in a stall condition, the Stall Protection System (SPS) uses a stick pusher to move the elevators to reduce the wing angle of attack.

The Stall Protection System (SPS) has the components that follow:

- Modules, Stall Protection (27-33-01)
- Actuator, Stick Pusher (27-33-06)
- Capstan, Stick Pusher (27-33-11)
- Quadrant, Stick Pusher (27-33-16)
- Shaker, Stick (27-33-21)
- Transducer, Angle of Attack (27-33-26)
- Switchlight, Stick Pusher Release (27-33-31)
- Switch, Pre-Flight Test.

The Stall Protection Modules (SPM1, SPM2) transmit data to the components that follow:

- Flight Guidance Module (FGM1,FGM2)
- Stick shakers
- Stick pusher
- Caution and Warning Annunicator Lights Panel
- Flight Data Concentrator (FDC)
- Ground Proximity Warning System (GPWS)
- Central Diagnostics System (CDS)

The Stall Protection Modules (SPM1, SPM2), Flight Guidance Modules (FGM1, FGM2), and the Flight Data Concentrator (FDC) are located in its related Integrated Flight Cabinet (IFC1, IFC2).

Detailed Description

The Stall Protection System (SPS) functions in the modes that follow:

- Initialization (INIT)
- Power-On Self Test (POST)
- Operational (OPER)
- Maintenance
- Teleloading.

Initialization (INIT) Mode: The Stall Protection System (SPS) functions in the initialization mode after an electrical power interruption to initialize the hardware and software.

If the Stall Protection System (SPS) does not receive a maintenance or teleloading request when the aircraft is on the ground, it will then function in the Power-On Self Test (POST) mode.

Power-On Self Test: The Stall Protection System (SPS) does a Power-On Self Test (POST) after a time long-term power interruption while the aircraft is on the ground.

The POST senses SPS hardware malfunctions that are not continuously monitored in the operational mode or apparent to the flight crew.

The POST tests the parameters that follow:

- Program memory
- Data memory
- Continuous monitoring
- Power supplies HW monitoring
- Discrete inputs
- Discrete outputs
- Module validity hardware logic
- ARINC 429 inputs
- ARINC 429 outputs
- Memory partitioning hardware monitoring
- Time partitioning hardware monitoring
- I/O sequencer
- Analog reference voltages.
- Analog inputs.

The results of the 25 second Power-On Self Test (POST) is stored in the Built In Test Equipment (BITE) and is sent to the Central Diagnostic System (CDS).

Each Stall Protection Module (SPM1, SPM2) does a Power-On Self Test (POST) twice before declaring a malfunction. If the Power-On Self Test (POST) senses a malfunction, the Stall Protection Module (SPM1, SPM2) will prevent the related Stick Shaker and the Stick Pusher from operating.

If there is a long-term power interruption while the aircraft is in flight, the SPM will not do a POST. It will use the stored Power-On Self Test (POST) results to determine its status.

Operational Mode: The Stall Protection System (SPS) uses two Stall Protection Modules (SPM1, SPM2) to control their related Stick Shakers. The two Stall Protection Modules (SPM1, SPM2) function together to control the Stick Pusher.

In a stall condition, a STICK PUSHER SHUT OFF switchlight selection can be made to manually stop a stick push or the pilots can override the stick push using the control columns. The stick shakers will continue to operate.

The Stall Protection System (SPS) operation mode is divided into the sub-modes that follow:

- Pre-flight
- In flight.

Pre-Flight Test: The pilot does a stall warning pre-flight test before each flight. The STALL WARN toggle switch located on the pilot side console is set to the TEST1 and then to the TEST2 position to test the two Stall Protection Modules (SPM1, SPM2). The switch must be held in the appropriate position for the entire test.

In-Flight Operational Mode: The Stall Protection System (SPS) operates when the calibrated airspeed is less than 215 kt (399 km/h) and the Above Ground Level (AGL) altitude is more than 200 ft (61 m).

Each Stall Protection Module (SPS 1, SPM2) uses the parameters that follow to calculate when the aircraft is near a stall condition:

- Angle of attack data
- Flap position
- Mach number
- Engine torque
- Icing status.

Two Stall Protection Modules (SPM1, SPM2) are used to calculate the stick pusher operating angle. It uses the parameters that follow:

- Angle of attack
- Flap position
- Mach number
- Power lever angle
- Condition lever angle
- Icing status.

The Stall Protection Modules (SPM1, SPM2) calculate when to start and cancel the stick shakers and stick pusher operation.

When the Stall Protection Modules (SPM1, SPM2) operate their related stick shakers, a signal to the Automatic Flight Control System (AFCS) disengages the autopilot. In addition, a signal to the Ground Proximity Warning System (GWPS) prevents the PULL UP audible alerts.

Each Stall Protection Module (SPM1, SPM2) uses its related Angle of Attack (AOA1, AOA2) transducer angle input for stick shaker calculations. The Stall Protection System (SPS) uses an average of the two Angle of Attack (AOA1, AOA2) transducer angle inputs for the stick pusher calculations.

The Stall Protection Module (SPM1, SPM2) will use the same input as the other Stall Protection Module (SPM1, SPM2) if any related data inputs that follow have malfunctioned:

- Angle of attack data
- Flap position
- Mach number
- Engine torque
- Icing status
- Power lever angle
- Condition lever angle.

If no data is available, the Stall Protection Module (SPM1, SPM2) will then use default data.

An Angle Of Attack (AOA1, AOA2) malfunction is the only input that causes the stick pusher from operating.

For the stick pusher calculations, each Stall Protection Module (SPM1, SPM2) uses the average of the two Angle Of Attack (AOA1, AOA2) inputs. The stick pusher will not operate if any of the conditions that follow is correct:

- One Angle Of Attack (AOA1, AOA2) transducer has malfunctioned
- There is a difference between the two Angle Of Attack (AOA1, AOA2) inputs.

If an Angle Of Attack (AOA1, AOA2) transducer is not being heated, the Stall Protection Modules (SPM1, SPM2) will not use its input.

When the aircraft is in icing conditions, the lift supplied by the wings can be decreased enough to cause the aircraft to stall at a lower angle of attack. The stall operating angle of the stick shaker and stick pusher is set to a relatively lower angle of attack when in icing conditions. The Stall Protection System (SPS) receives icing condition status data from the selection of the propeller anti-ice switch. On aircraft with Mod 4Q126089, the Stall Protection System (SPS) receives icing condition status data from the selection of the INCR position of the REF SPEEDS switch on the ICE PROTECTION panel.

When the propeller anti-ice switch is turned ON, the Stall Protection System (SPS) changes its calculations because of the reduced performance limits of the aircraft. On aircraft with Mod 4Q126089, when the REF SPEEDS switch on the ICE PROTECTION panel is set to INCR position, the Stall Protection System (SPS) changes its calculations because of the reduced performance limits of the aircraft. The Electronic Instrument System (EIS) shows an INCR REF SPEEDS message.

Maintenance Mode: The Built In Test Equipment (BITE) uses the Central Diagnostic System (CDS) to give the condition of the component. It saves faults in a Non Volatile Memory (NVM) for reporting to line and shop maintenance.

The maintenance mode is selected from one or the other ARCDU during maintenance operations. The SPM does a test when it receives a maintenance discrete command through the IOM1 while the air speed is less than 50 kt (93 km/h) and the aircraft is on the ground.

The Built In Test Equipment (BITE) allows aircraft maintenance personnel to:

- Do fault isolation and return to service testing after completing maintenance actions
- Access failure reports from last or previous flight legs
- Get the avionics status report
- Get the part number of an LRU.

The Built In Test Equipment (BITE) modes monitor the condition of the component as follows:

- Power-On Self Test (POST)
- Continuous Monitoring.

Power-On Self Test (POST): The Power-On Self Test (POST) checks the condition of the component at power-up or after a long power interruption, more than 200 milliseconds.

Continuous Monitoring: The continuous monitoring checks the status of the component in flight. It records faults in a Non Volatile Memory (NVM) for later troubleshooting using the Central Diagnostic System (CDS).

When energized, the Stall Protection System (SPS) does the different types of monitoring that follow:

- Internal monitoring
- External input monitoring
- Stick shaker monitoring
- Stick pusher monitoring.

Internal Monitoring: Each Stall Protection Module (SPM1, SPM2) continuously does self monitoring tests to make sure that it can do its functions. It tests the parameters that follow:

- Secondary power supplies
- Continuous monitoring
- Memory partitioning
- Stack overflow
- Job overflow
- Bus error
- I/O sequencer validity
- CPU Board/EXT board ARINC 429 dialogue
- SPM cross monitoring.

An SPM cross monitoring malfunction prevents stick pusher operation. All other continuous self monitoring test malfunctions prevent stick shaker and stick pusher operations.

External Input Monitoring: Each Stall Protection Module (SPM1, SPM2) monitors the external inputs that follow:

- AOA transducers
- AOA transducer corrections
- FPIU flap position data
- Propeller de-icing selected data
- PSEU Weight On Wheels data
- ADU data
- AHRS data
- Radio Altimeter data
- FADEC Engine data.

AOA Transducer Monitoring: Each Stall Protection Module (SPM1, SPM2) monitors the transducer parameters that follow:

- Excitation
- Range

- Consistency between the sine and cosine values
- Heater malfunction.

The Stall Protection Modules (SPM1, SPM2) check the difference between the two Angle Of Attack (AOA1, AOA2) transducers when the calibrated airspeed is greater than 60 kt (111 km/h) and the aircraft is not in a stall condition.

The AOA transducer angles are critical parameters for the SPS functions. If an AOA transducer malfunctions, each SPM will use the remaining transducer to make its stick shaker calculation.

If the two AOA transducers malfunction, the SPM will prevent stick shaker operation. The stick shakers will continue to function when the SPMs sense a difference between the two AOA transducer values.

The SPMs will prevent Stick Pusher operation if any of the conditions that follow are true:

- The AOA transducer monitor stops sensing that an AOA transducer has malfunctioned
- The comparison monitor senses a difference between the two AOA transducers.

AOA Transducer Correction Monitoring: The two SPMs compare the AOA transducer correction values from the Aircraft Configuration Module (ACM). The AOA transducer corrections are non-critical parameters for the Stall Protection System (SPS) because they have a minor effect on the stick shaker and stick pusher operation. When the AOA transducer correction values do not agree, the stick shakers and stick pusher continue to operate in flight.

Malfunctions of non-critical parameters are not shown in flight. The #1 STALL SYST FAIL or #2 STALL SYST FAIL caution light will come on 30 seconds after the aircraft has landed.

FPIU Flap Position Data Monitoring: The Flap Position Indicator Unit (FPIU) data is monitored by each SPM. The flap position data is non-critical for the SPS. If the related flap position data to a SPM is not correct, it will use data from the other flap position input.

If the two flap position inputs malfunction, the stick shakers and stick pusher continue to operate in flight.

Propeller De-Icing Selected Data Monitoring: The SPMs compare the PROPELLER DE-ICING SELECTED discrete signals. The propeller anti-Icing selected data is considered non-critical for the SPS. If the two discrete signals disagree, the stall SPMs will operate as if a de-icing selection was made.

REF SPEEDS Selected Data Monitoring: On aircraft with Mod 4Q126089, the SPMs compare the REF SPEEDS SELECTED discrete signals. The REF SPEEDS selected data is considered non-critical for the SPS. If the two discrete signals disagree, the stall SPMs will operate as if a de-icing selection was made.

The stick shakers and stick pusher continue to operate in flight.

Malfunctions of non-critical parameters are not shown in flight. The #1 STALL SYST FAIL or #2 STALL SYST FAIL caution light will come on 30 seconds after the aircraft has landed.

PSEU Weight On Wheels Data Monitoring: Each SPM compares the WOW1 and WOW2 discrete signals from the Proximity Sensor Electronics Unit (PSEU). If the WOW1 and WOW2 discrete signals disagree, the SPM will use true airspeed and radio altitude to sense the in flight or on ground status of the aircraft.

ADU Data Monitoring: The Air Data Units (ADU1, ADU2) are monitored by each SPM. The ADU data are non-critical for the SPS. If the ADU air data to its related SPM is not correct, it will use data from the other ADU.

If the two ADUs malfunction, the stick shakers and stick pusher continue to operate in flight.

Malfunctions of non-critical parameters are not shown in flight. The #1 STALL SYST FAIL or #2 STALL SYST FAIL caution light will come on 30 seconds after the aircraft has landed.

AHRS Data Monitoring: The Attitude and Heading System (AHRS1, AHRS2) data are monitored by each SPM. The AHRS data is non-critical for the SPS. If the AHRS data to the related SPM is not correct, it will use data from the other AHRS.

If the two AHRS malfunction, the stick shakers and stick pusher continue to operate in flight.

Malfunctions of non-critical parameters are not shown in flight. The #1 STALL SYST FAIL or #2 STALL SYST FAIL caution light will come on 30 seconds after the aircraft has landed.

Radio Altimeter Data Monitoring: Each SPM compares the Above Ground Level (AGL) altitude and the RA TRIP input discrete signal. If the AGL altitude and the RA TRIP discrete signal disagree, the SPS makes the radio altitude invalid.

FADEC Engine Data Monitoring: The Full Authority Digital Engine Control (FADEC) engine data is monitored by each SPM. The SPMs check the engine torque parameters.

The FADEC engine data is non-critical for the SPS. If the related engine data to a SPM has malfunctioned, it will use the other engine data. If the data from two engines has malfunctioned, the SPM will use default values.

The stick shakers and stick pusher continue to operate in flight.

Malfunctions of non-critical parameters are not shown in flight. The #1 STALL SYST FAIL or #2 STALL SYST FAIL caution light will come on 30 seconds after the aircraft has landed.

Stick Shaker Monitoring: The SPMs monitor the stick shakers. Each stall SPM monitors its related stick shaker for the malfunctions that follow:

- Current
- Open circuit
- Short circuit to ground.

Stick Pusher Monitoring: The monitoring of the stick pusher is done by the SPMs and the stick pusher actuator. Each SPM monitors its related stick pusher for the malfunctions that follow:

- Un-commanded stick push

- No stick push when commanded
- SPM Stick Pusher driver failure.

Un-commanded Stick Push: Each SPM checks that the PUSH signal from the stick pusher actuator is consistent with its command.

No Stick Push When Commanded: Each SPM checks that the PUSH signal from the stick pusher actuator is consistent with its command. In addition, each SPM checks the FAIL signal from the stick pusher actuator.

SPM Stick Pusher Driver Failure: Each SPM stick pusher driver failure compares its stick pusher hardware command with its stick pusher software command.

The stick pusher actuator monitors the parameters that follow:

- Loss of the 28VDC Main Power input to the stick pusher actuator
- Difference between the PUSH1 and PUSH2 commands from the two SPS channels
- Selection of a stick pusher shut off switch
- Internal failures of the stick pusher actuator.

When a malfunction is sensed, the stick pusher actuator sets its FAIL signal output discrete signal.

Teleloading Mode: The electronic instrument system uses the teleloading mode to connect the operational software serial data to the Stall Protection System (SPS) through the Portable Maintenance Access Terminal (PMAT).

These conditions must be met to access the teleloading mode:

- Aircraft Weight on Wheels (WOW)
- A "data load request" discrete.

The Stall Protection System (SPS) does a software configuration check before teleloading begins. This ensures that the software version to be teleloaded is consistent with the equipment part number.

The SPS restarts after a complete and successful teleload. It initiates a complete Power-On Self Test (POST) within 10 seconds.

Note: Electrical power interruptions to the SPMs have different results depending on the duration.

A short term power interruption that continues for more than 75 milliseconds and less than 200 milliseconds will cause the SPM to reset. It will not start a Power-On Self Test (POST).

A long term power interruption will cause the SPM to reset. If the aircraft is on the ground, it will start a Power-On Self Test (POST).

Refer to Figure 2.The STALL WARN switch is set to the TEST1 position to test the functions that follow:

- The Radio Altimeter (RA) stick pusher inhibit is functioning
- #1 STALL SYST FAIL caution light comes on
- PUSHER SYST FAIL caution light comes on
- The related stick shaker operates.

NOTE: A stick push does not occur.

The STALL WARN switch is set to the TEST2 position to test the functions that follow:

- The Radio Altimeter (RA) stick pusher inhibit is functioning
- #2 STALL SYST FAIL caution light comes on
- PUSHER SYST FAIL caution light comes on
- The related stick shaker operates.

NOTE: A stick push does not occur.

Refer to Figure 3.The Stall Protection System (SPS) operates when the conditions that follow are correct:

- Calibrated airspeed is less than 215 kt (399 km/h)
- Above Ground Level (AGL) altitude is more than 200 ft (61 m)
- Stick pusher PUSH OFF annunciator switch is not pushed to the OFF position.

When the aircraft is near a stall condition, an electrical motor inside the stick shaker turns an unbalanced mass at approximately 1600 rpm. This causes the control columns to vibrate. In addition to this tactile warning, the stick shaker motor and the rattling of the chain mechanism inside the control column creates a loud noise.

When one stick shaker is operating, its vibration is transmitted through the torque tubes and the push/pull rod to the other control column.

The stick pusher will move the control columns to decrease the angle of attack of the wing when the aircraft is in a stall condition. The pilots can override the stick pusher clutch by applying an opposite breakout 36 kilogram-force (kgf) to the control column. After breakout, a 30 kilograms-force (kgf) is needed to continue to override the clutch.

The stick pusher PUSH OFF switchlight can also be pushed to turn off the stick pusher.

NOTE: Note: A stick pusher malfunction can cause the SHUT OFF switchlight to turn on.

If one stick pusher SHUT OFF switchlight or the other is pushed and latched, the PUSH OFF caption will go out on both annunciator switchlights. The stick pusher actuator will be shut off.

When the same switchlight is pushed again, it releases and the PUSH OFF captions in the two switchlights turn on.

Malfunctions of the Stall Protection System (SPS) are shown with caution lights. Malfunctions sensed by the stick pusher actuator are shown on the stick pusher shut off annunciator switches located on the glareshield panel.

Refer to Figure 4.The stall protection system malfunctions are shown with the caution lights that follow:

- #1 STALL SYST FAIL
- #2 STALL SYST FAIL
- PUSHER SYST FAIL.

The #1 STALL SYST FAIL and #2 STALL SYST FAIL caution lights come on immediately in flight when malfunctions that prevent stick shaker and stick pusher operation are sensed.

Malfunctions of non-critical parameters are not shown in flight. The #1 STALL SYST FAIL or #2 STALL SYST FAIL caution light will come on 30 seconds after the aircraft has landed.

A stick shaker motor malfunction is not shown in flight. The #1 STALL SYST FAIL or #2 STALL SYST FAIL caution light will come on 30 seconds after the aircraft has landed.

Any of the conditions that follow will cause the PUSHER SYST FAIL caution light to come on:

- Any failure that causes the #1 STALL SYST FAIL or #2 STALL SYST FAIL caution lights to turn on
- A failure of the stick pusher actuator.

The PUSHER SYST FAIL caution light comes on when a stick pusher SHUT OFF switchlight selection is made. The PUSHER SYST FAIL light will go out when the two stick pusher SHUT OFF switchlights are not set and no malfunctions exist.

The Left Main and Right Main busses supply electrical power through 5 Ampere circuit breakers and the Prime Power Supply Modules (PPSM 1, PPSM 2) to the related SPM and stick shaker motors.

The left main and right main busses supply electrical power through 7 ½ ampere circuit breakers to the stick pusher and the related stick pusher SHUT OFF switchlight.

The Stall Protection Modules interface with the components that follow:

- Angle Of Attack (AOA1, AOA2) Transducers
- Other Stall Protection Module (SPM1, SPM2)
- Aircraft Configuration Module (ACM)
- Flap Position Indicator Unit (FPIU)
- Propeller De-Icing
- Input/Output Processors (IOP1, IOP2)
- Proximity Sensor Electronic Unit (PSEU)
- Air Data Units (ADU1, ADU2)
- Attitude and Heading Reference Units (AHRU1, AHRU2).

Angle Of Attack (AOA1, AOA2) Transducers: Each AOA transducer has 2 synchro-resolvers. One supplies AOA transducer angle data to its related Stall Protection Module (SPM1, SPM2). The other synchro-resolver supplies AOA transducer data to the other SPM.

The SPMs supply a 7.5 Vac, 2500 Hz excitation voltage for the synchro-resolvers.

The outputs of the AOA Transducers are AC voltages that relate to the sine and cosine of the transducer angles. The SPMs use the voltages to calculate the angle of attack.

Each SPM receives the heating status of the two Angle Of Attack (AOA1, AOA2) transducers.

Other Stall Protection Module (SPM1, SPM2): Each SPM transmits its validity status data on an ARINC 429 data bus to the other SPM.

Aircraft Configuration Modules (ACM1, ACM2): Each SPM receives installation correction values for each AOA Transducer from the Aircraft Configuration Modules (ACM1, ACM2). The installation correction values adjust for errors in the mounting of the AOA Transducers.

To calculate the body angle of attack, each Stall Protection Module (SPM1, SPM2) corrects the angles that follow:

- The 10 degree AOA transducer installation offset
- Any specific installation error represented by the AOA transducer corrections stored in the Aircraft Configuration Modules (ACM1, ACM2).

Flap Position Indicator Unit (FPIU): Each SPM receives two analog DC signals from the left and right channels of the Flap Position Interface Unit (FPIU). The signals relate to the left and right flap positions.

In addition, each Stall Protection Module (SPM1, SPM2) receives a FLAP HEALTHY discrete signal from the left and right channels of the FPIU when the system is serviceable.

Propeller De-Icing: The Propeller De-Icing Switch supplies a discrete signal to the two SPMs. The SPS will use one de-icing selected status discrete or the other to calculate the operating angle.

REF SPEEDS: On aircraft with Mod 4Q126089, the selection of the INCR position of the REF SPEEDS switch on the ICE PROTECTION panel supplies a REF SPEEDS SELECTED discrete signal to the two SPMs. The SPS will use one REF SPEEDS SELECTED status discrete or the other to calculate the operating angle.

Input/Output Processors (IOP1, IOP2): Each SPM receives digital data from the Radio Altitude (RA) and Full Authority Digital Engine Control (FADEC) through both Input/Output Processors (IOP1, IOP2).

Each SPM sends data to the Input/Output Processors (IOP1, IOP2) to cause the Electronic Instruments System (EIS) to show an INCR REF SPEEDS message when a propeller de-icing selection is made.

Each SPM receives engine data through the Input/Output Processors (IOP1, IOP2) from the four FADEC channels. The SPMs use engine torque in the stick shaker operating angle calculations. It uses power lever angle and condition lever angle in the stick pusher operating angle calculations.

Proximity Sensor Electronics Unit (PSEU): Each SPM receives two Weight On Wheels (WOW1, WOW 2) discrete signals from the Proximity Sensor Electronics Unit (PSEU). The two nose gear WOW proximity switches are used to set in-flight or on-ground status.

Air Data Unit (ADU1, ADU2): Each SPM receives data from the two Air Data Units (ADU1, ADU2). The SPMs use the Mach number and the true airspeed to calculate the operating angle. The SPS uses the Calibrated Airspeed (CAS) to prevent stick pusher operation at airspeeds greater than 215 kt (399 km/h). It prevents AOA transducer comparison monitoring at airspeeds below 60 kt (111 km/h).

Attitude and Heading Reference System (AHRS1, AHRS2): Each Stall SPM receives data from the two AHRS. It uses the parameters that follow:

- Roll angle
- Pitch angle
- Pitch rate
- Normal acceleration.

Radio Altimeter (RA1, RA2): The SPM1 receives an RA TRIP discrete signal from RA1 when the AGL altitude is less than 200 ft (61 m). The SPM2 receives an RA TRIP discrete signal from RA1 in a single radio altimeter aircraft configuration when the altitude is less than 200 ft (61 m) AGL. It receives an RA TRIP discrete signal from RA2 in a dual radio altimeter aircraft configuration when the altitude is less than 200 ft (61 m) AGL. The SPS uses these RA TRIP discrete signals to prevent stick pusher operation below 200 ft (61 m) AGL.

For the pre-flight test, each SPS gives an RA TEST ENABLE discrete signal and an analog RA TEST SIGNAL voltage to test the RA inhibit function. A separate test enable discrete signal is supplied from the pre-flight test switch. The RA must receive all the test input to do the test.

Each SPM receives AGL radio altitude through the Input/Output Processors (IOP1, IOP2). It uses the AGL radio altitude and true airspeed to calculate in flight status of the aircraft when the Weight On Wheels inputs from the Proximity Sensor Electronics Unit (PSEU) disagree.

Auto Flight Control System (AFCS): Each SPM sends a discrete signal to the Auto Flight Control System (AFCS) to disengage the autopilot when the aircraft angle of attack has reached the stick shake condition.

Stick Shakers: Each SPM uses two wires to connect it to its related stick shaker. One wire is used to supply 28 Vdc and the other is used for return. This configuration allows the SPMs to command and monitor the Stick Shaker motors.

Stick Pusher: Each SPM supplies a PUSH command to the stick pusher actuator. SPM1 gives the PUSH1 command to the stick pusher actuator motor and SPM2 gives the PUSH2 command to the stick pusher actuator clutch.

The stick pusher actuator sends a PUSH discrete signal to each SPM to give indication of a stick push.

The stick pusher actuator supplies a FAIL signal to the SPMs to give indication of the conditions that follow:

- Stick pusher actuator internal monitoring has malfunctioned
- Stick pusher SHUT OFF annunciator switch is set.

Caution and Warning Panel: The caution and warning annunicator lights panel will turn on the #1 STALL SYST FAIL light when the SPM1 malfunctions. The #2 STALL SYST FAIL light turns on when the SPM2 malfunctions. The PUSHER SYST FAIL light comes when one SPM or the other malfunctions.

Flight Data Recorder (FDR): The SPS sends data through Input/Output Processor (IOP1) to the Flight Data Recorder (FDR). Each SPM sends the data that follows:

- Corrected Angle Of Attack (AOA1, AOA2)
- Stick shaker healthy status
- Stick pusher healthy status.

Ground Proximity Warning System (GPWS): Each SPM sends a discrete signal to the Ground Proximity Warning System (GPWS) to prevent the PULL UP aural warning when the aircraft is in a stall condition.

Central Diagnostics System (CDS): Each SPM sends malfunction data through the Input/Output Processor (IOP1) to the Centralized Diagnostic System (CDS). When the aircraft is on the ground, the CDS is used to reset or test the Stall Protection System (SPS).

Pusher SHUT OFF annunciator switchlights: The pilot stick pusher SHUT OFF switchlights supply a PILOT RELEASE signal to the stick pusher actuator to prevent stick pusher operation. The copilot stick pusher SHUT OFF annunciator switch supplies a CO-PILOT RELEASE signal to the stick pusher actuator to prevent stick pusher operation.

The stick pusher is connected to the elevator control system with a mechanical cable. When commanded, the stick pusher turns until it touches a mechanical stop, corresponding to a fixed column position.

Note: The stick shaker, stick pusher actuator and capstan are passively cooled. The stick pusher actuator can operate against a stalling load for only a short time before overheating. Accordingly, the SPS contains software protection to limit the stick pusher operation to a maximum of 15 seconds, with a subsequent time delay of 1 minute before the stick pusher can be commanded again.

Modules, Stall Protection

Refer to Figure 5.The Stall Protection Module (SPM1, SPM2) has the two electronic circuit boards that follow:

- Extension board
- Central Processing Unit (CPU) board.

One part of the extension board is for the Stall Protection System (SPS) and the other part is used by Ground Proximity Warning System (GPWS) for input/output processing.

The SPM uses discrete signals and ARINC 429 interfaces between the Central Processing Unit (CPU) and external boards.

The SPMs make a reference voltage for AOA transducer resolvers that is 7 Vac, 2500 Hz.

Each SPM is guided into the Integrated Flight Cabinet (IFC 1, IFC 2) using a guide rail and guide pins. The top and bottom guide pins at the IFC backpanel make sure that the module and the backpanel come together precisely in the correct location.

The SPMs are held in place using front locking levers. This gives easy installation and removal of the Line Replaceable Unit (LRU) without tools.

Actuator, Stick Pusher

Refer to Figure 6.The stick pusher actuator turns an output pinion to move a stick pusher capstan that moves the control columns forward when the aircraft is in a stall condition.

The stick pusher actuator uses two 28 Vdc electrical power sources. One power source supplies motor current and the other supplies electrical power to the monitor circuits.

The stick pusher actuator has the parts that follow:

- Mounting plate
- Electromechanical disconnect clutch
- Permanent magnet DC drive motor
- Gear train
- Power electronics assembly
- Printed circuit board assembly.

The stick pusher actuator needs two independent PUSH1 and PUSH2 input signals from the Stall Protection Modules (SPM1, SPM2) to operate. The PUSH1 signal operates the motor and the PUSH2 signal engages its electromechanical clutch.

A pilot STICK PUSHER SHUT OFF switchlight selection prevents stick pusher motor operation and disengages its clutch. A copilot STICK PUSHER SHUT OFF switchlight selection prevents motor operation.

A pilot or copilot STICK PUSHER SHUT OFF switch selection prevents stick pusher operation regardless of the mode of the PUSH1 and PUSH2 input signals.

The motor current is limited to control the stick pusher actuator output torque. The output torque is nominally set to eight Newton metres (Nm), which is equivalent to approximately 32 kilograms (kg) of column force.

The stick pusher actuator continuously monitors its electromechanical and electronic components when electrical power is supplied. The stick pusher actuator outputs a PUSH signal when the actuator is supplying a stick push. The stick pusher actuator outputs a FAIL signal when the internal monitoring circuit senses a malfunction of its electromechanical or electronic components.

The stick pusher actuator weighs 2.8 lb (1.27 kg) and is 5.25 in. (134 mm) high, 3.78 in. (96 mm) wide and 3.60 in. (91 mm) long. It is attached to the stick pusher capstan with four mounting bolts.

Capstan, Stick Pusher

Refer to Figure 7.The stick pusher assembly has a stick pusher actuator connected to a stick pusher capstan. The stick pusher actuator gives the actual stick push when commanded by the Stall Protection Modules (SPM1, SPM2). The stick pusher capstan gives the mechanical interface with the aircraft elevator control system.

The stick pusher capstan is a mechanical assembly that takes an input from a gear pinion and gives an output to the elevator control system cables. The stick pusher capstan has an override slip clutch that lets the cable pulley turn if the stick pusher actuator cannot be moved because of a mechanical malfunction.

The stick pusher capstan consists of the following:

- Housing
- Shaft
- Input gear
- Override clutch

- Pulley
- End cap.

The override clutch is a dual friction surface slip clutch that is adjustable with a nut.

The stick pusher capstan is attached to the aircraft and connected to the elevator control system with a cable. The stick pusher actuator is attached to the stick pusher capstan. The stick pusher actuator may be removed from the aircraft without removing the stick pusher capstan.

The stick pusher capstan weighs 1.8 lb (0.82 kg). It is attached to the aircraft with four bolts that screw into floating nut-plates on the stick pusher capstan. Two aircraft cables are attached to the capstan pulley using swaged ball fittings that anchor to pockets in the pulley.

Quadrant, Stick Pusher

Refer to Figure 8.The stick pusher quadrant receives input from the stick pusher capstan to operate the elevator control cables so that the control column is pushed forward when a stall condition is sensed.

It has springs that supply tension regulation of the control cable system.

The stick pusher quadrant is located below the left flight compartment floor.

Shaker, Stick

Refer to Figure 9.The stick shaker has a housing that contains an electrical motor that turns an unbalanced weight.

The stick shaker is approximately 5.12 in. (132 mm) long and 2.44 in. (62 mm) in diameter. It is attached to the control column using a bracket.

Transducer, Angle of Attack (AOA)

Refer to Figure 10.The Angle of Attack (AOA1, AOA2) Transducer is used to measure the local angle of attack.

Each AOA transducer has a fixed body that is attached to the aircraft and a transducer that is moved by the relative airflow.

Each AOA Transducer has the components that follow:

- Transducer
- Shaft, bearings, and gears
- Counterweight
- Damper
- Two resolvers.

The transducer is connected to a shaft that turns freely.

A counterweight and a damper are attached to the shaft to balance the transducer.

The damper is used to reduce interference and wear on the movable parts. The damper is electromagnetic device that has a rotor with magnets and a stator. The damper has mobile stops that make contact with fixed stops in the body of the AOA transducer. It has a turning limit of 43 degrees in a clockwise or counterclockwise direction.

The AOA transducer has two resolvers to send angular data to the Stall Protection Modules (SPM1, SPM2). Each resolver uses 7 Vac, 2500 Hz excitation power.

The AOA transducer has a self-regulated heater to prevent icing. The body is not heated.

Each AOA transducer weighs 2.0 lb (0.91 kg). It is attached to the aircraft with five mounting screws and two locating pins. When installed, the vane protrudes 3.78 in. (96 mm) from the aircraft.

Switchlight, Stick Pusher Release

Refer to Figure 11.The Stick Pusher Shut Off PUSH OFF switchlights come on when the stick pusher actuator malfunctions.

If one Stick Pusher Shut Off PUSH OFF switchlight or the other is pushed, the stick pusher actuator will not operate and the PUSH OFF caption will go off.

The two stick pusher shut off PUSH OFF switchlights are attached to the glareshield panel assembly. Each switchlight is located in the field of view of each pilot.

Switch, Pre-Flight Test

The STALL WARN pre-flight test switch is used to test the Stall Protection Systems (SPS).

The pre-flight test switch is labelled as STALL WARN. It is a positive break, double pole, toggle switch with a lever that springs back to the center OFF position. The toggle lever is connected to a mechanism located in the body of the switch. The internal mechanism moves in the opposite direction as the toggle lever.

The pre-flight test switch has solder lug terminals for wiring connections.

The pre-flight test switch is attached to the pilot's side console panel with a mounting nut and lock washer.

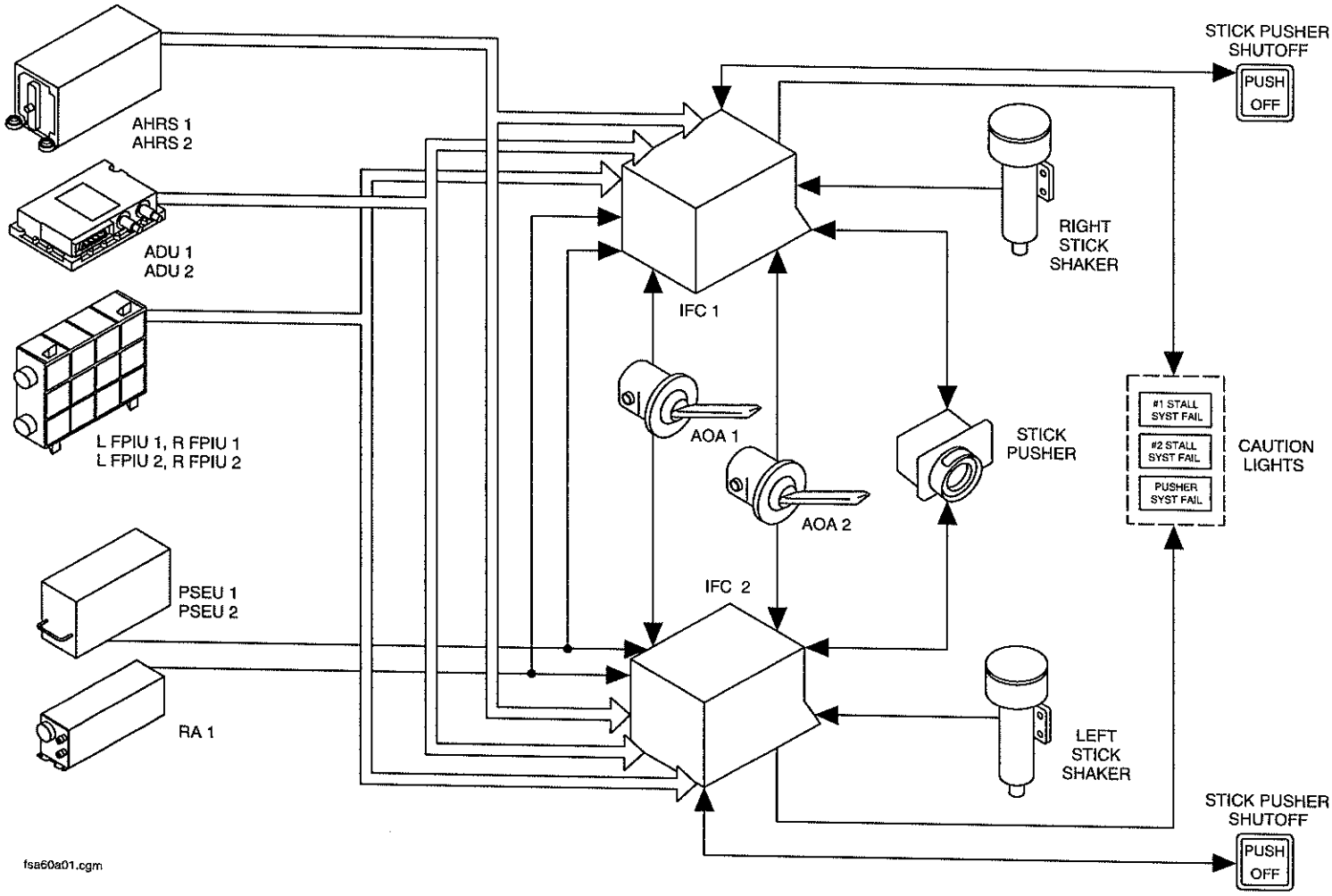

SPS BLOCK DIAGRAM
Figure 1

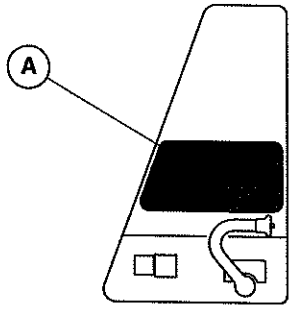

LEFT SIDE CONSOLE

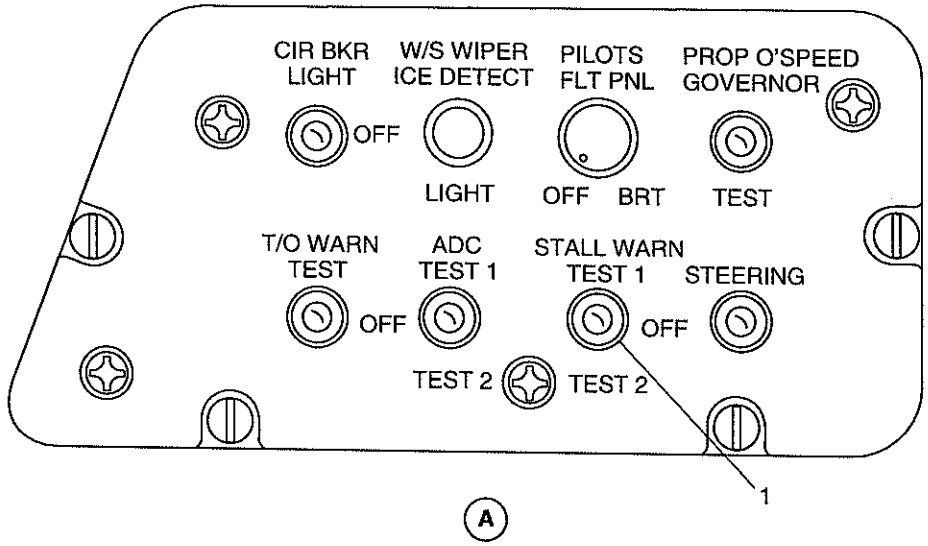

LEGEND

1. Stall Warn Test Toggle Switch.

fs985a01.cgm

SPS PRE-FLIGHT TEST SWITCH
Figure 2

Effectivity:

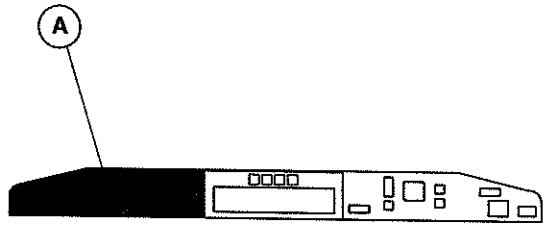

GLARESHIELD PANEL

LEGEND

1. Stick Pusher Shutoff Annunciator Switch.

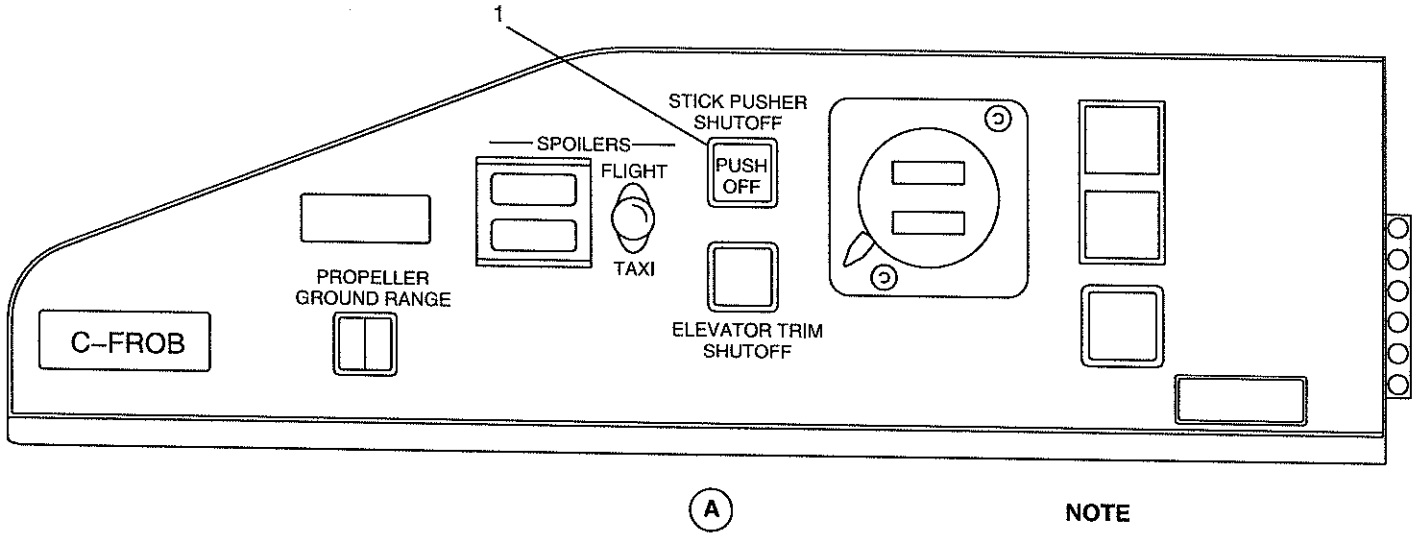

NOTE

Pilot side shown.
Copilot side similar.

fs968a01.cgm

SPS STICK PUSHER RELEASE SWITCHLIGHT
Figure 3

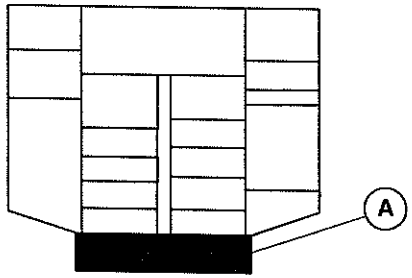

OVERHEAD CONSOLE

LEGEND

1. Pusher System Fail (Amber).
2. # 2 Stall System Fail (Amber).
3. # 1 Stall System Fail (Amber).

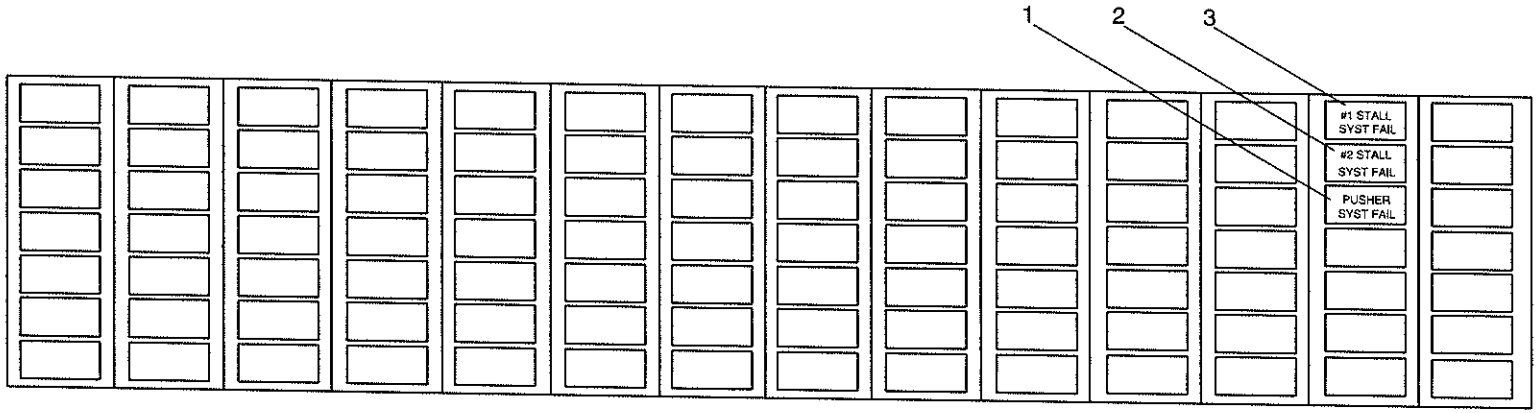

A

fs986a01.cgm

SPM CAUTION LIGHT INDICATIONS
Figure 4

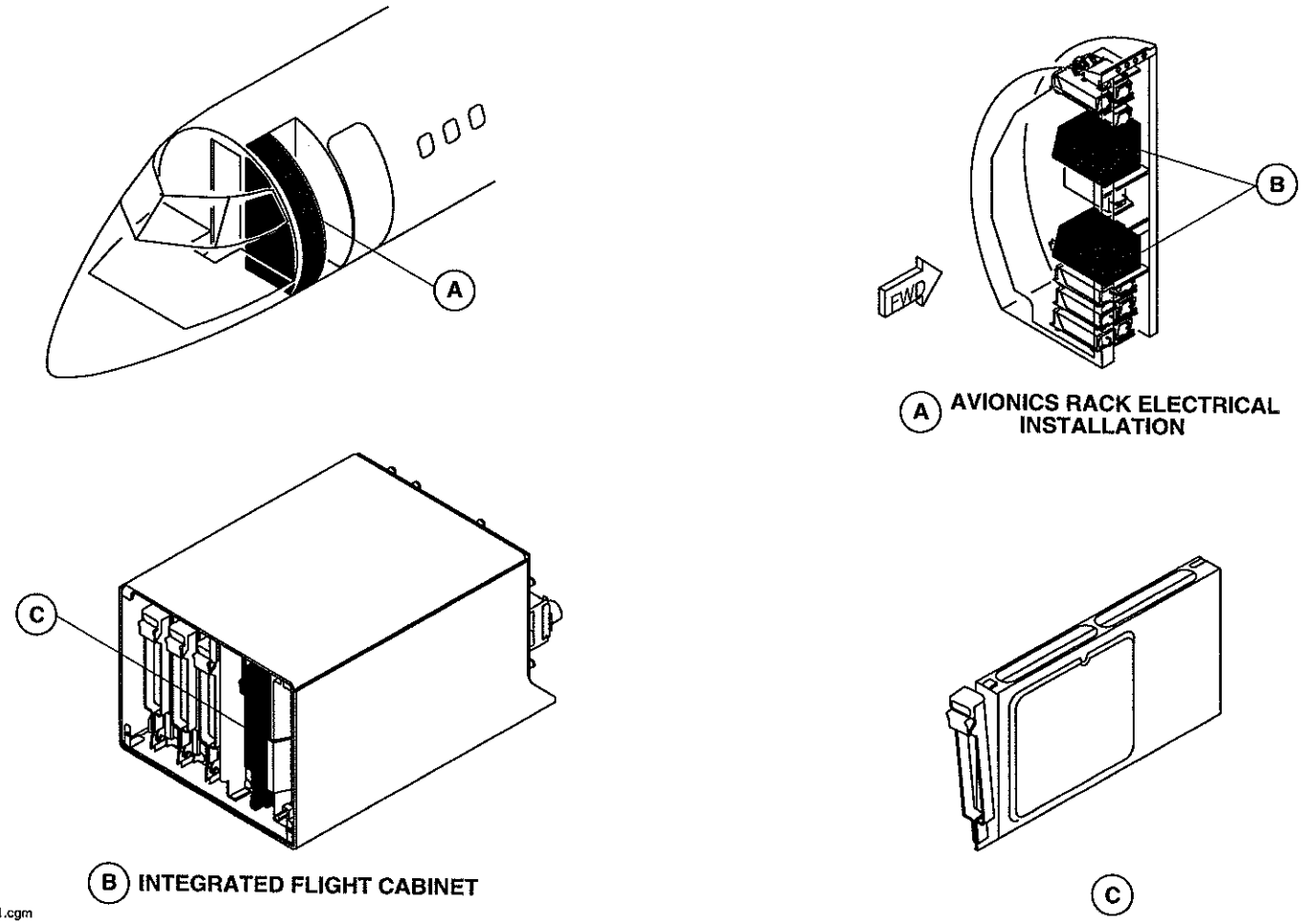

STALL PROTECTION MODULES LOCATOR
Figure 5

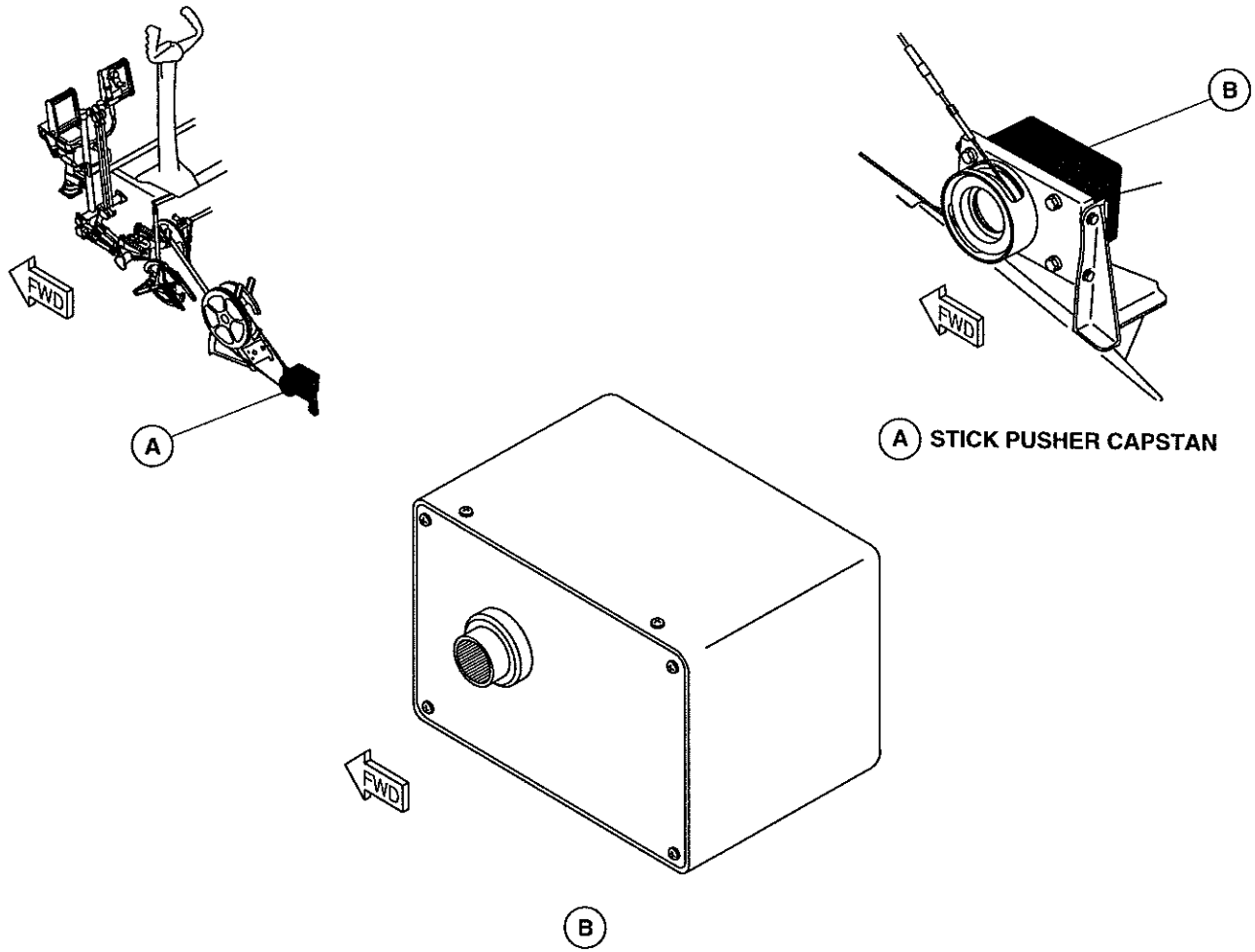

fs983a01.cgm

STICK PUSHER ACTUATOR LOCATOR
Figure 6

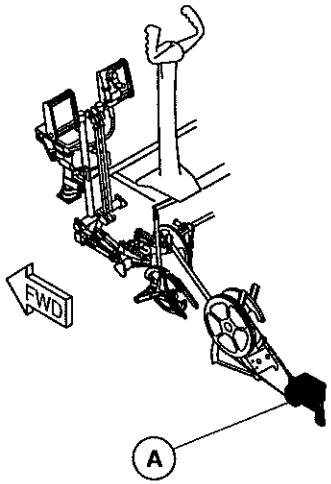

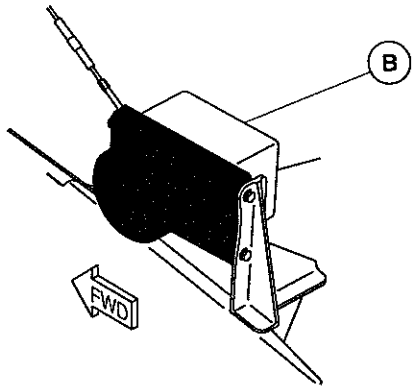

A STICK PUSHER CAPSTAN

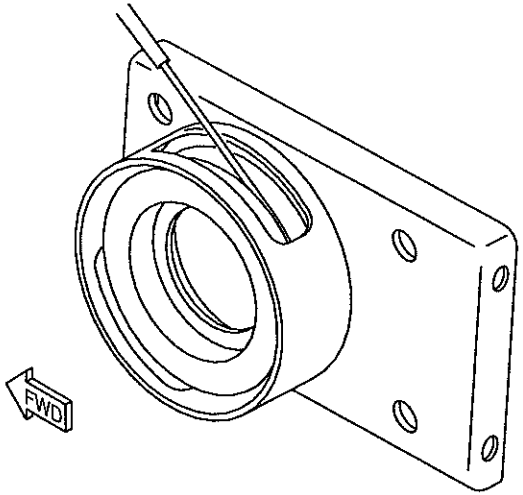

B

fs984a01.cgm

STICK PUSHER CAPSTAN LOCATOR
Figure 7

Effectivity:

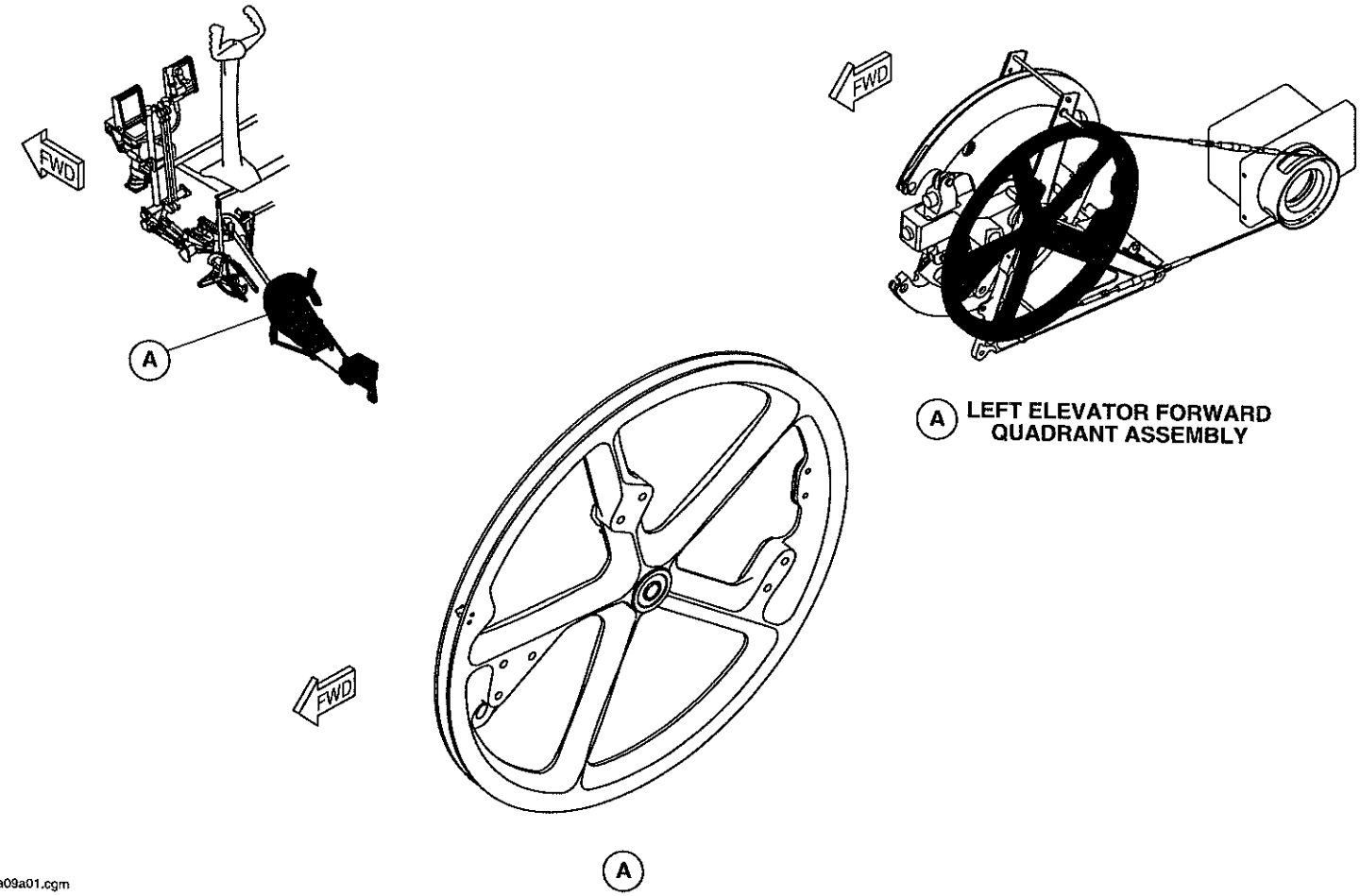

fsa09a01.cgm

STICK PUSHER QUADRANT LOCATOR
Figure 8

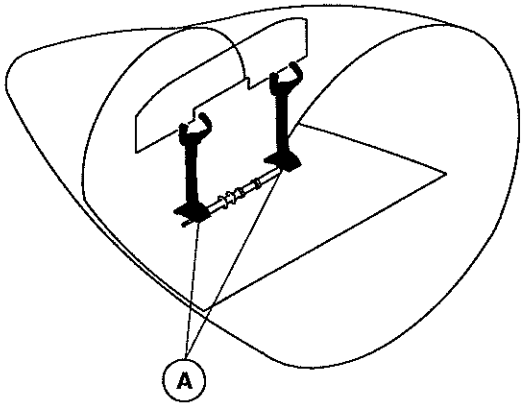

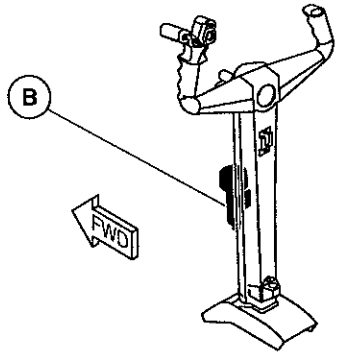

NOTE

Pilot side shown.
Copilot side similar.

(A) **CONTROL COLUMN ASSEMBLY**

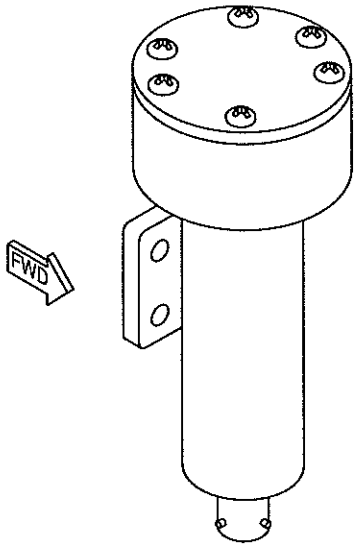

(B)

fs950a01.cgm

STICK SHAKER LOCATOR
Figure 9

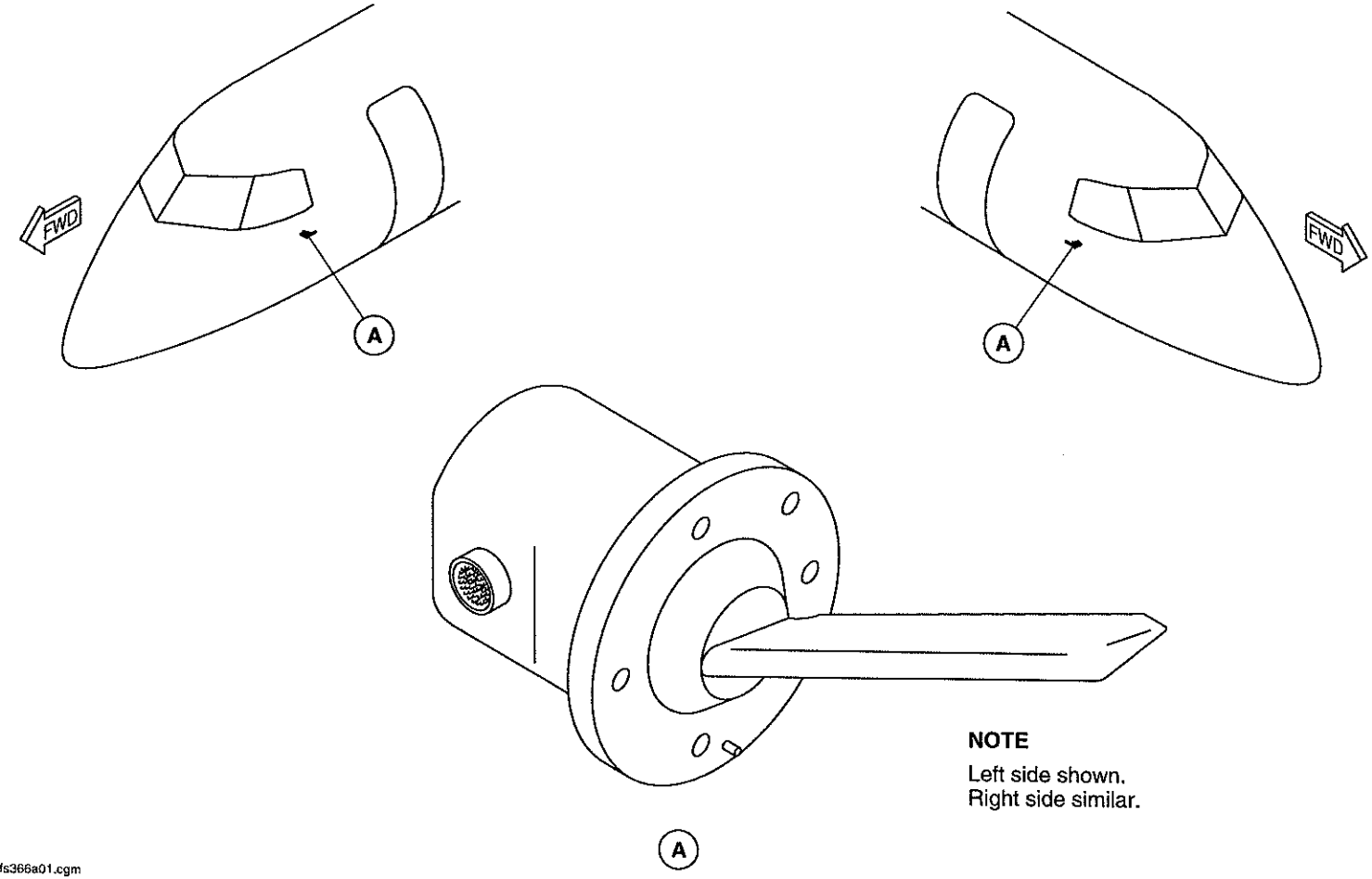

NOTE
Left side shown.
Right side similar.

fs366a01.cgm

ANGLE OF ATTACK TRANSDUCER LOCATOR
Figure 10

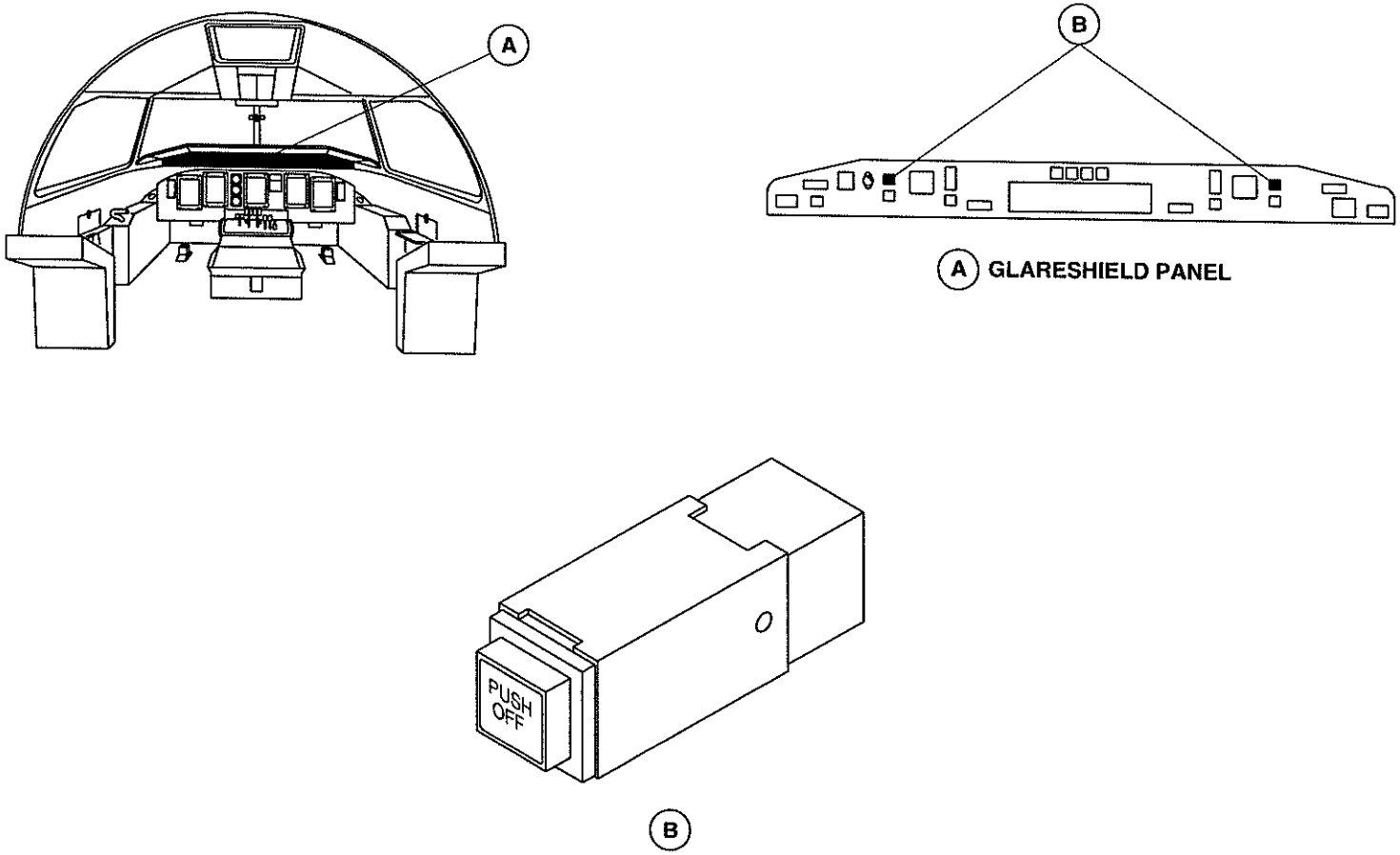

fs982a01.cgm

SPS STICK PUSHER RELEASE SWITCHLIGHT LOCATOR
Figure 11