BEA n-uw080510_tec01
Date of issue 1st December 2008

Technical document

VEMD and CAD examination

Accident on **10 May 2008**
at **4.5 miles southeast of La Crosse Airport (USA)**
to the helicopter **EC135 T2+ (S/N 0535)**
registered **N135UW**
operated by **Air Methods Corporation**

BEA
Bureau d'Enquêtes et d'Analyses
pour la sécurité de l'aviation civile
MINISTERE DE L'ECOLOGIE, DE L'ENERGIE, DU DEVELOPPEMENT DURABLE ET DE L'AMENAGEMENT DU TERRITOIRE

Foreword

This document contains technical information that is the property of the manufacturer of the equipment. Information and photographs in this document are intended only to explain the various phases of the examination and should not be used in any way other than for the purposes of this technical investigation.

The conclusions of this document are based upon work performed by the BEA (Bureau d'Enquêtes et d'Analyses pour la sécurité de l'aviation civile). Nothing in the presentation of this technical report or in the points raised therein should be interpreted as an indication of the direction or the conclusions of the investigation.

This document is the property of the BEA and cannot be copied or reproduced, even partially, without prior written permission.

Contents

FOREWORD **2**

CONTENTS **3**

GLOSSARY **4**

1 – SUMMARY **5**

1.1 Circumstances **5**

1.2 Evidence **5**

1.3 Chronology **5**

2 – WORK PERFORMED **6**

2.1 VEMD examination details **6**

2.1.1 Technical information 6
2.1.2 Decoding process 6
2.1.3 Findings 7

2.2 CAD examination details **9**

2.2.1 Technical information 9
2.2.2 Decoding process 9
2.2.3 Findings 9

3 – CONCLUSION **10**

This document is the property of the BEA and cannot be copied or reproduced, even partially, without prior written permission.

Glossary

ARINC 429	Standard for avionics data bus
CAD	Caution Advisory Display
CBIT	Continuous build in test
CLP	Collective Pitch value
CPDS	Central Panel Display System
ECD	Eurocopter Deutschland
EOP	Engine Oil Pressure
EOT	Engine Oil Temperature
FADEC	Full Authority Digital Engine Control
FCDM	Flight Control Display Module
IRS	Interface Requirement System
N1	Rotor speed value
N2	Free turbine Speed value
OAT	Outside Air Temperature
P0	Static pressure value
RS422	Standard for serial communication
SRS	Software Requirement System
TOT	Turbine Outlet Temperature
TRQ	Torque
VEMD	Vehicule Engine Multifunction Display

This document is the property of the BEA and cannot be copied or reproduced, even partially, without prior written permission.

1 – SUMMARY

1.1 Circumstances

The helicopter registered N135UW impacted trees and terrain after takeoff.

1.2 Evidence

- **2 raw data files** recovered from the VEMD (P/N B19030GC09, S/N 4566)
- **1 raw data file** recovered from the CAD (P/N C19243BC09, S/N 1745)

1.3 Chronology

May 10th, 2008: Accident occurred.

June 26th, 2008: A copy of the raw data read out in the VEMD and CAD maintenance memory chips was sent to the BEA.

July 16th, 2008: A preliminary decoding was performed by the BEA.

October 3rd, 2008: Meeting with ECD in the aim of validating the converted data.

This document is the property of the BEA and cannot be copied or reproduced, even partially, without prior written permission.

2 – WORK PERFORMED

2.1 VEMD examination details

2.1.1 Technical information

The VEMD is a multifunction display installed on the instrument panel and designed to manage essential and non-essential vehicle and engine data.
It manages:

- the display of vehicle parameters,
- the display of engine parameters,
- the computation and display of engine first limitation,
- the fail management procedures,
- the computation and display of weight related to performance data,
- the computation and display of the number of engine cycles.

The VEMD is a dual channel system, which modules are commonly called A and Ap, respectively the upper and the lower channel.

The VEMD has four independent modes:
- INIT
- OPERATIONAL
- CONFIGURATION
- MAINTENANCE

The last two modes are auxiliary modes, enabled only when the helicopter is on the ground.

2.1.2 Decoding process

The decoding process was performed with the decoding documents [(1)] and using dedicated software [(2)] developed at the BEA.

The VEMD is designed to store maintenance data. The interpretation of retrieved data for accident investigation requires precise knowledge of the failure code designed by the manufacturer.

(1) EC135/IRS VEMD SPL 316 A 0732 E 01, issue C released in January 2005 & EC135/SRS VEMD SPL 316 A 0734 E 01, issue C released in January 2005.

(2) LOLA version 2.1 released the 15 July 2008.

This document is the property of the BEA and cannot be copied or reproduced, even partially, without prior written permission.

2.1.3 Findings

The last flight recorded by each module is the flight n°1334.

The recorded flight duration is 2 min 53 s. As this data is refreshed with a sampling rate of 80 seconds, the actual flight duration is between 2 min 53 s and 4 min 13 s.

From the beginning of the flight to 2 min 53 s:

- At least one fault was sent by the FCDM (this fault is recorded in the FCDM maintenance memory).
- No failure and no overlimit were recorded.

From 2 min 53 s to the end of the flight (maximum 4 min 13 s):

- 8 fault messages were recorded.

Recorded time (left module)	Failure code and associated label	Failure explanation
3 min 20.0 s	61=> SURV_TRQ_FADEC	VEMD Software CBIT of RS422 Torque values. The acquired values are outside a specified range
3 min 20.0 s	88 => SURV_DOM_OAT_BUS	VEMD Software CBIT. A429 OAT value outside a specified range
3 min 21.0 s	69 => SURV_DOM_OAT	VEMD Software CBIT. Analogue OAT value outside a specified range
3 min 21.5 s	79 => CROSS_P0_ARINC	VEMD Software CBIT. A429 P0 values have a discrepancy > 4mBar in static conditions
3 min 21.5 s	69 => SURV_DOM_OAT	VEMD Software CBIT. Analogue OAT value outside a specified range
3 min 24.0 s	30 => FAIL_FADEC	VEMD Software CBIT. discret input from FADEC or numerical input (bit on RS422 data stream from FADEC) declare a FADEC failure
3 min 24.0 s	88 => SURV_DOM_OAT_BUS	VEMD Software CBIT. A429 OAT value outside a specified range
3 min 24.5 s	31 => SURV_FADEC	VEMD Software CBIT. A RS422 FADEC link failure is declared if an invalid frame has been received or no valid frame has been received 3 times (150ms) successively

This document is the property of the BEA and cannot be copied or reproduced, even partially, without prior written permission.

Snapshot data for "SURV_DOM_OAT" fault message:

	Left module		Right module	
Start	3 min 21.0 s	3 min 21.5 s	3 min 21.0 s	3 min 21.5 s
End	0 min 0.0 s	0 min 0.0 s		
Code Event	SURV_DOM_OAT (69)			
P01 (FADEC)	958 mbar	958 mbar	958 mbar	958 mbar
P02 (FADEC)	961 mbar	958 mbar	958 mbar	958 mbar
OAT	- 19°C	-39°C	-39°C	-39°C
T1_1	11 °C	11 °C	11 °C	11 °C
T1_2	11 °C	11 °C	11 °C	11 °C
EOP_1	0.75 bar	0.75 bar	0.75 bar	0.75 bar
EOP_2	0.75 bar	0.75 bar	0.75 bar	0.75 bar
EOT_1	64 °C	64 °C	64 °C	64 °C
EOT_2	66 °C	66 °C	66 °C	66 °C

Parameters of interest are underlined in yellow.

Snapshot data for "SURV_TRQ_FADEC" fault message:

	Left module	Right module
Start	3 min 20.0 s	3 min 20.0 s
End	0 min 0.0 s	0 min 0.0 s
Code Event	0084h (132)	0086h (134)
N11	88.2 %	88.4 %
N12	88.5 %	88.3 %
N11 (FADEC)	88.5 %	88.5 %
N12 (FADEC)	90.0 %	90.7 %
DN11 (1)	- 8.0 %	- 8.0 %
DN12 (1)	- 8.0 %	- 8.0 %
TRQ1 (CAD)	44.7 %	45.2 %
TRQ2 (CAD)	43.8 %	44.1 %
TRQ1 (FADEC)	51.6 %	0.0 %
TRQ2 (FADEC)	47.8 %	49.0 %

Parameters of interest are underlined in yellow.

(1) DN1 and DN2 parameters are used only for PW engines. Not to be considered for this event.

No snapshot data was recorded for the remaining recorded fault messages.

This document is the property of the BEA and cannot be copied or reproduced, even partially, without prior written permission.

2.2 CAD examination details

2.2.1 Technical information

The CAD is an equipment of the central panel display system (CPDS); it's installed on the instrument panel of the EC135 helicopter. Part of engine's sensors is handled by the CAD to allow backup control on that channel.

The CAD is designed to store maintenance data.

The interpretation of retrieved data for accident investigation requires precise knowledge of the failure code designed by the manufacturer.

2.2.2 Decoding process

The decoding process was performed with the decoding documents [(1)] and using dedicated software [(2)] developed at the BEA.

2.2.3 Findings

The last flight seen by the CAD is flight n°1334.

In flight n°1334, one fault message was recorded at 3 min 24 s (see details here-below).

Failure code and associated label	Failure explanation
21=> TEST_13V_OUT_MFQ2	CAD Hardware Continuous build in test (CBIT) of Main Fuel tank sensors power supply. The measured deviation is at least 13 V + / - 26mV

(1) EC135/IRS CAD SPL 316 A 0731 E 01, issue C released in January 2005 & EC135/SRS CAD SPL 316 A 0733 E 01, issue C released in February 2005.

(2) LOLA version 2.1 released the 15 July 2008.

This document is the property of the BEA and cannot be copied or reproduced, even partially, without prior written permission.

3 – CONCLUSION

- Raw data read-out in the VEMD and CAD history fault memory were decoding with the assistance of ECD.
- The decoded data are summarized here below:

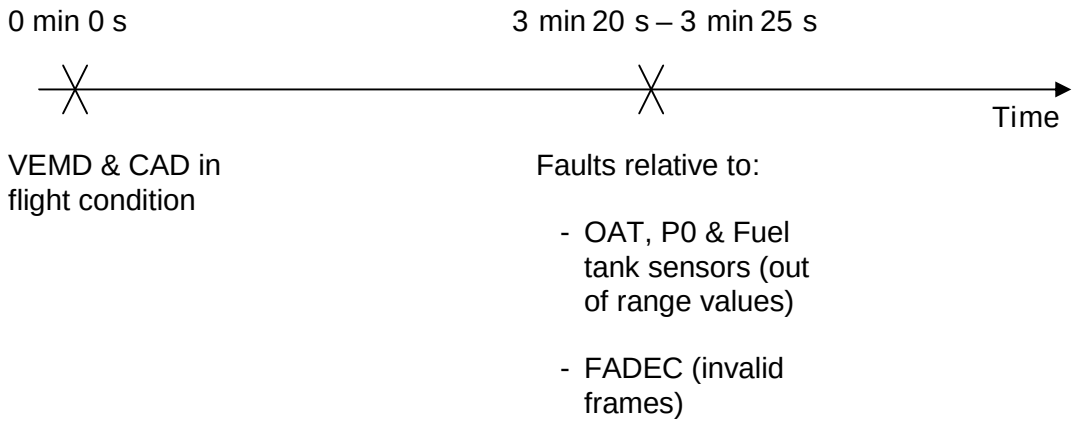

This document is the property of the BEA and cannot be copied or reproduced, even partially, without prior written permission.

Appendice

Appendix 1: CPDS general synopsis

Appendix 1: CPDS general synopsis

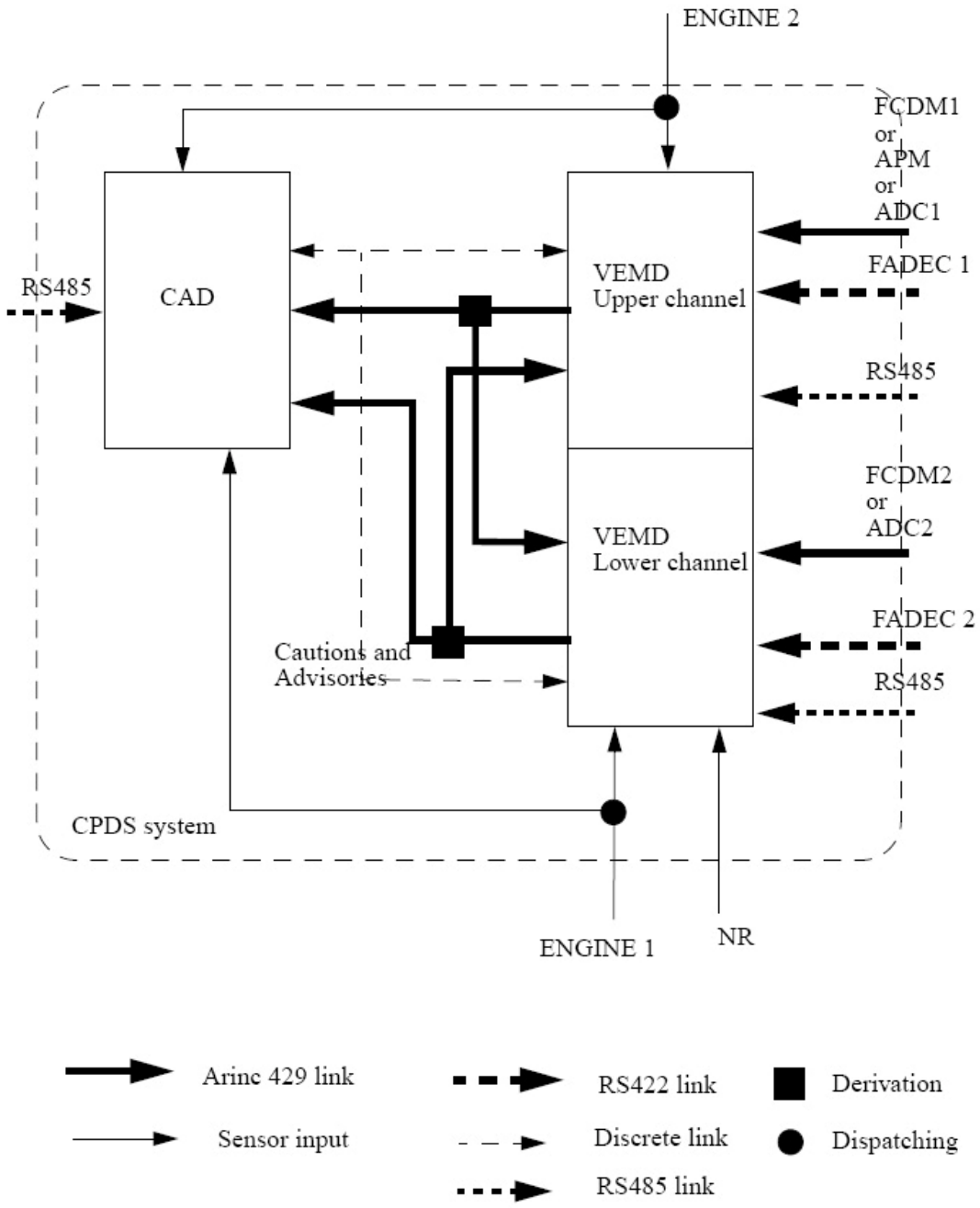

BEA

Bureau d'Enquêtes et d'Analyses
pour la sécurité de l'aviation civile

Zone Sud - 200 rue de Paris
Aéroport du Bourget
93352 Le Bourget Cedex - France
T : +33 1 49 92 72 00 - F : +33 1 49 92 72 03
www.bea.aero

Liberté • Égalité • Fraternité
RÉPUBLIQUE FRANÇAISE